# TROPICAL SHIPPING

## NEW OFFICES

PLOT 8, EAST HOPE (H.O.V.I.C. LANDS)
ST. CROIX, U.S. VIRGIN ISLANDS


GENERAL:

| | |
|---|---|
| C1 | COVER SHEET & DRAWING INDEX |
| C2 | SITE LAYOUT PLAN |

ARCHITECTURAL:

| | |
|---|---|
| A101 | FLOOR PLAN |
| A102 | REFLECTED CEILING PLAN |
| A103 | ROOF PLAN |
| A201 | BUILDING ELEVATIONS |
| A202 | INTERIOR ELEVATIONS |
| A301 | BUILDING SECTION |
| A401 | TOILET FIXTURES & ACCESSORIES |
| A402 | ADA CLEARANCE PLAN |
| A403 | CISTERN PLAN & DETAILS |
| A701 | BREAK ROOM MILLWORK PLAN & ELEVS |
| A702 | MILLWORK PLANS & ELEVATIONS |
| A801 | ARCHITECTURAL SCHEDULES & DETAILS |
| A802 | ARCHITECTURAL SPECIFICATIONS |

STRUCTURAL:

| | |
|---|---|
| S100 | FOUNDATION & SLAB ON GRADE PLAN |
| S101 | FIRST FLOOR FRAMING PLAN |
| S102 | SECOND FLOOR FRAMING PLAN |
| S103 | ROOF FRAMING PLAN |
| S200 | FOUNDATION AND SLAB ON GRADE DETAILS |
| S201 | SUSPENDED SLAB, WALLS & BEAM DETAILS |
| S202 | ROOF DETAILS & GENERAL NOTES |
| S300 | STANDARD STRUCTURAL DETAILS |

PLUMBING

| | |
|---|---|
| P100 | LOWER LEVEL - PLUMBING PLAN |
| P101 | FIRST FLOOR - PLUMBING PLAN |
| P102 | SECOND FLOOR - PLUMBING PLAN |
| P103 | LOWER LEVEL - SANITARY PLAN |
| P104 | FIRST FLOOR - STORM/SANITARY PLAN |
| P105 | SECOND FLOOR - STORM/SANTIARY PLAN |
| P106 | ROOF - STORM/SANTIARY PLAN |
| P107 | PLUMBING SCHEDULES, DETAILS + SPEC |
| P108 | PLUMBING RISER DIAGRAM |

ELECTRICAL

| | |
|---|---|
| E001 | ELECTRICAL SITE PLAN |
| E002 | ELECTRICAL SCHEDULES & DISTRIBUTION |
| E100 | LOWER LEVEL PLAN - POWER & LIGHTING |
| E101 | FIRST FLOOR PLAN - POWER & LIGHTING |
| E102 | SECOND FLOOR PLAN - POWER & LIGHTING |


E5 DRAWING INDEX

CONTAINER PORT (H.O.V.I.C. LANDS)

PROPERTY LOCATION

E7 PROJECT LOCATION

N.T.S.

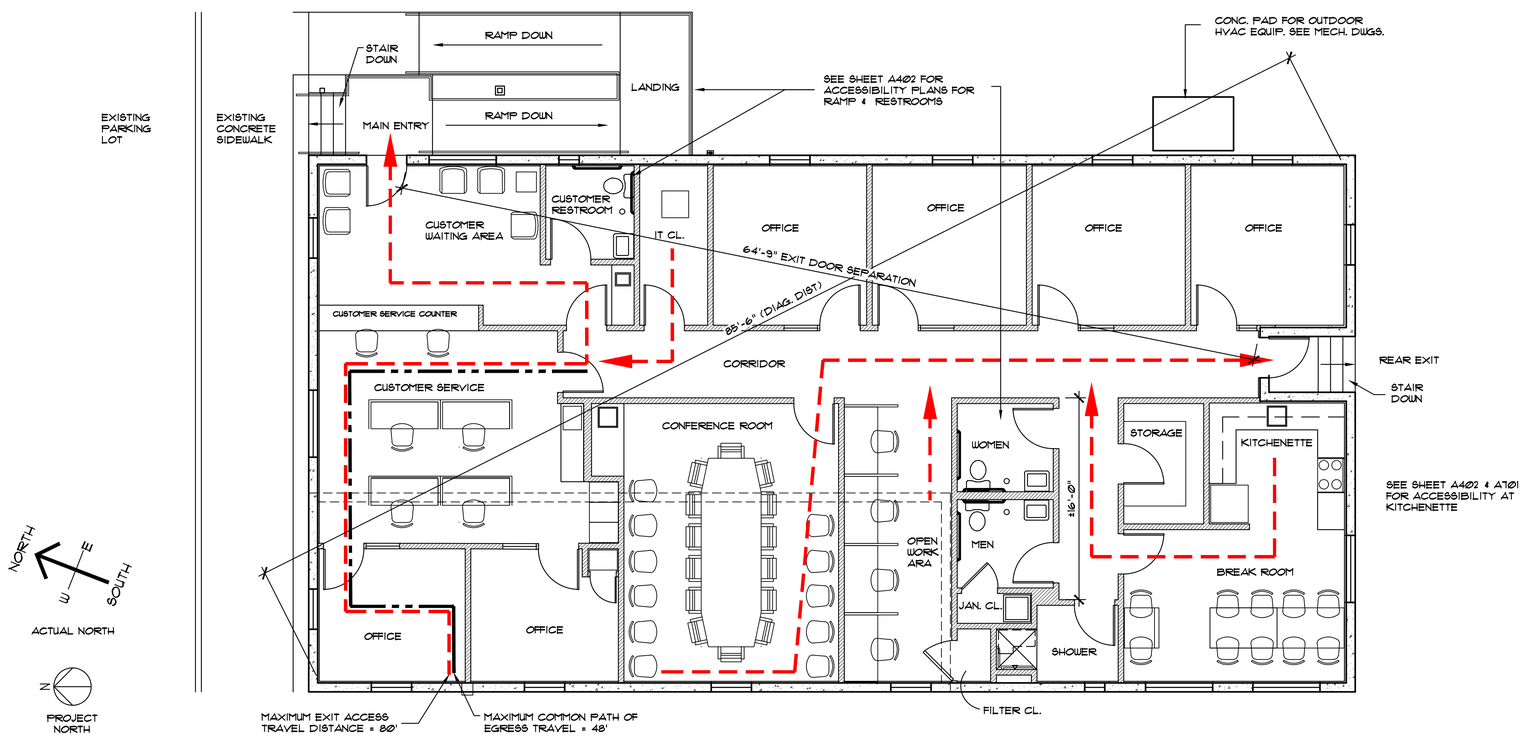


L1 EGRESS PLAN

3/16"

SUBMITTED UNDER INTERNATIONAL BUILDING CODE 2021

APPLICABLE SUBCODES:
ELECTRICAL SUBCODE: NEC 2020
MECHANICAL SUBCODE: IMC 2021
PLUMBING SUBCODE: UPC 2021
ENERGY SUBCODE: IECC 2021

**DESIGN DEVELOPMENT**
**NOT FOR CONSTRUCTION**

NEW 1-STORY BUILDING WITH CISTERN BELOW SLAB

CONSTRUCTION TYPE: III-B (CONCRETE WALLS, CONCRETE SLAB, WOOD ROOF FRAMING)

BUILDING IS NOT SPRINKLERED

BUILDING AREA & VOLUME CALCULATIONS

| | |
|---|---|
| GROSS BUILDING AREA | 3,120 S.F. |
| AVERAGE HEIGHT ABOVE GRADE | 15'-6" |
| BUILDING VOLUME | 48,360 CU. FT. |

| | |
|---|---|
| BUILDING USE GROUP | B (BUSINESS) |
| FLOOR AREA | 2,898 S.F. |
| OCCUPANT LOAD: | 20 (1 OCC PER 150 S.F.) |

| | ACTUAL | CODE REQ'D | IBC-2021 REFERENCE |
|---|---|---|---|
| NUMBER OF EXITS | 2 | 2 | TABLE 1006.3.3 |
| MIN. EXIT DOOR SEPARATION | 64'-9" | 42'-9" | SECTION 1007.1.1 |
| MAX. EXIT ACCESS TRAVEL DISTANCE | 80' | 200' | TABLE 1017.2 |
| MAX. COMMON PATH OF TRAVEL | 48' | 100' | TABLE 1006.2.1 |
| DEAD END CORRIDOR LENGTH | 16' | 20' | SECTION 1020.4 |

L8 CODE INFORMATION


BENTON CONSTRUCTION, LLC
3000 ORANGE GROVE, CHRISTIANSTED
ST. CROIX, U.S. VIRGIN ISLANDS 00820
PHONE: (340) 718-7223 FAX: (340) 718-4779
WEBSITE: WWW.BCVI.COM

ARCHITECT
SILVERBERG ASSOCIATES VI, P.C.
ARCHITECTS
55 COMPANY STREET, SUITE B, CHRISTIANSTED
ST. CROIX, USVI 00820
NJ PHONE: (609) 921-1867 NJ FAX: (609) 921-8326

MEP ENGINEER
T.J.D. ENGINEERING ASSOCIATES, INC.
2 Hancock Drive, West Milford, N.J. 07480
Certificate of Authorization 24GA27944000
Phone 973-208-0054
Fax 973-208-0851

STRUCTURAL ENGINEER
HARRISON HAMNETT, P.C.
40 Knowles Street
Pennington, New Jersey 08534
Office (609) 818-1808
Fax (609) 818-1809

OWNER
Tropical SHIPPING


PROFESSIONAL SEAL:

THIS DRAWING SHALL NOT BE USED FOR CONSTRUCTION UNLESS A PROFESSIONAL'S SEAL AND SIGNATURE ARE ON THE DRAWING

PROJECT TITLE / DESCRIPTION:
TROPICAL SHIPPING
NEW OFFICES

FACILITY LOCATION:
TROPICAL SHIPPING L.L.C.
(LEASED PLOT)

PLOT NO. 8
EAST HOPE (H.O.V.I.C. LANDS)
QUEEN'S QUARTER, ST. CROIX USVI

DATE: 5-28-24

| NO: | REVISION: | DATE: |
|---|---|---|
| | | |

PROJECT NUMBER:
CZM SUBMISSION

DRAWING TITLE:
COVER SHEET
& CODE INFO

SHEET NUMBER:
C-1

SHEET OF

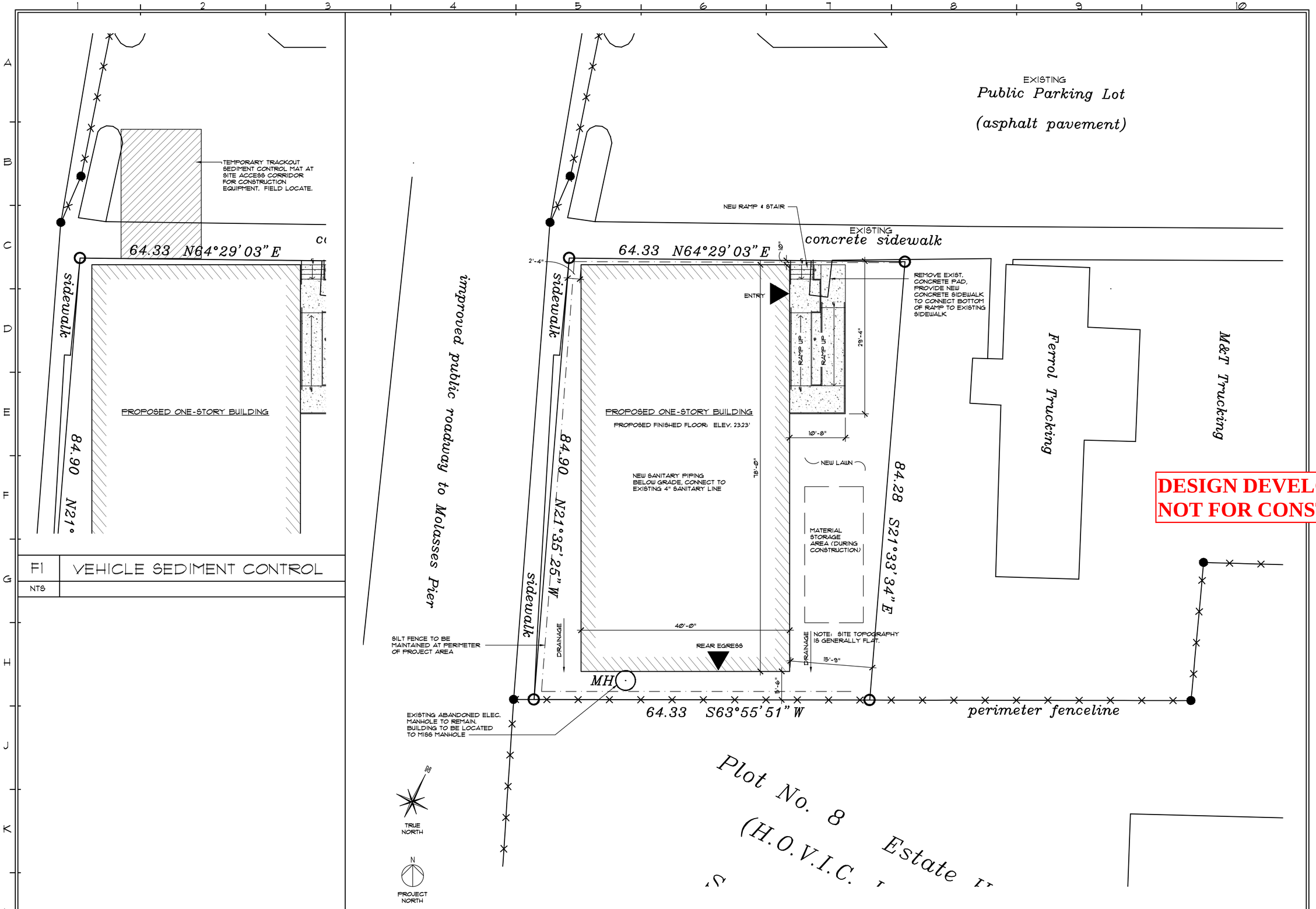


| F1 | VEHICLE SEDIMENT CONTROL |
|---|---|
| NTS | |

| L3 | PROPOSED SITE LAYOUT - TROPICAL SHIPPING LEASED SITE AREA |
|---|---|
| 1/8" | |

DESIGN DEVELOPMENT
NOT FOR CONSTRUCTION


BENTON CONSTRUCTION, LLC
3000 ORANGE GROVE, CHRISTIANSTED
ST. CROIX, U.S. VIRGIN ISLANDS 00820
PHONE: (340) 718-722 FAX: (340) 718-4719
WEBSITE: WWW.BCVI.COM

ARCHITECT
SILVERBERG ASSOCIATES VI, P.C.
ARCHITECTS
55 COMPANY STREET, SUITE B, CHRISTIANSTED
ST. CROIX, USVI 00820
NJ PHONE: (609) 921-1867 NJ FAX: (609) 921-8326

MEP ENGINEER
T.J.D. ENGINEERING ASSOCIATES, INC.
2 Hancock Drive, West Milford, N.J. 07480
Certificate of Authorization 24GA27944000
Phone 973-208-0054
Fax 973-208-0851

STRUCTURAL ENGINEER
HARRISON HAMNETT, P.C.
40 Knowles Street
Pennington, New Jersey 08534
Office (609) 818-1808
Fax (609) 818-1809


OWNER
Tropical SHIPPING

PROFESSIONAL SEAL:

THIS DRAWING SHALL NOT BE USED FOR CONSTRUCTION UNLESS A PROFESSIONAL'S SEAL AND SIGNATURE ARE ON THE DRAWING

PROJECT TITLE / DESCRIPTION:
TROPICAL SHIPPING NEW OFFICES

FACILITY LOCATION:
TROPICAL SHIPPING L.L.C.
(LEASED PLOT)
PLOT NO. 8
EAST HOPE (H.O.V.I.C. LANDS)
QUEEN'S QUARTER, ST. CROIX USVI

DATE: 5-28-24

| NO: | REVISION: | DATE: |
|---|---|---|
| | | |

PROJECT NUMBER: 22254

DRAWING TITLE: SITE LAYOUT

SHEET NUMBER: C-2

SHEET OF

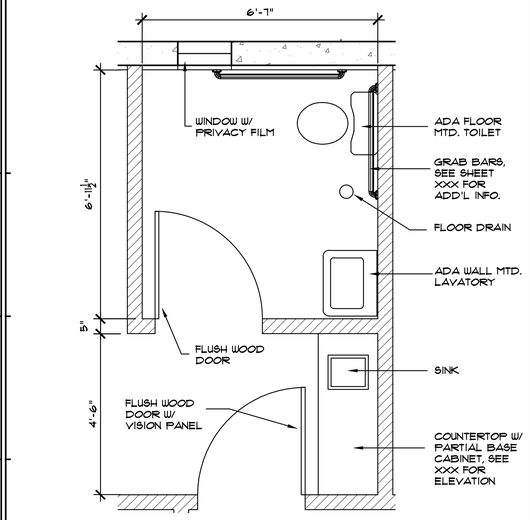


D1 ENLARGED PLAN

1/2" CUSTOMER RESTROOM

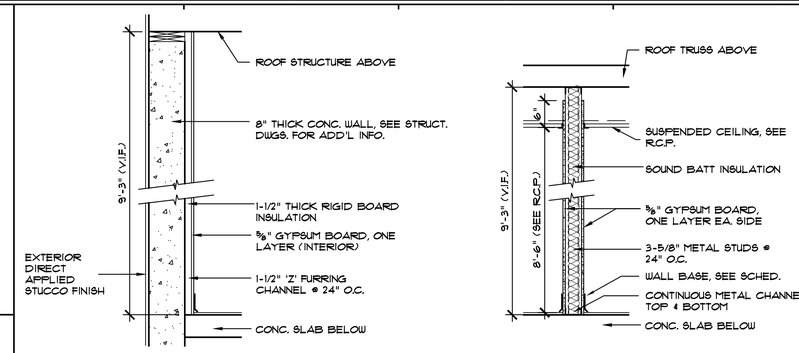


A EXTERIOR WALL W/ NARROW DEPTH WALL FURRING

B INTERIOR WOOD STUD & GYP. BD. PARTITION

D7 WALL TYPES

N.T.S.

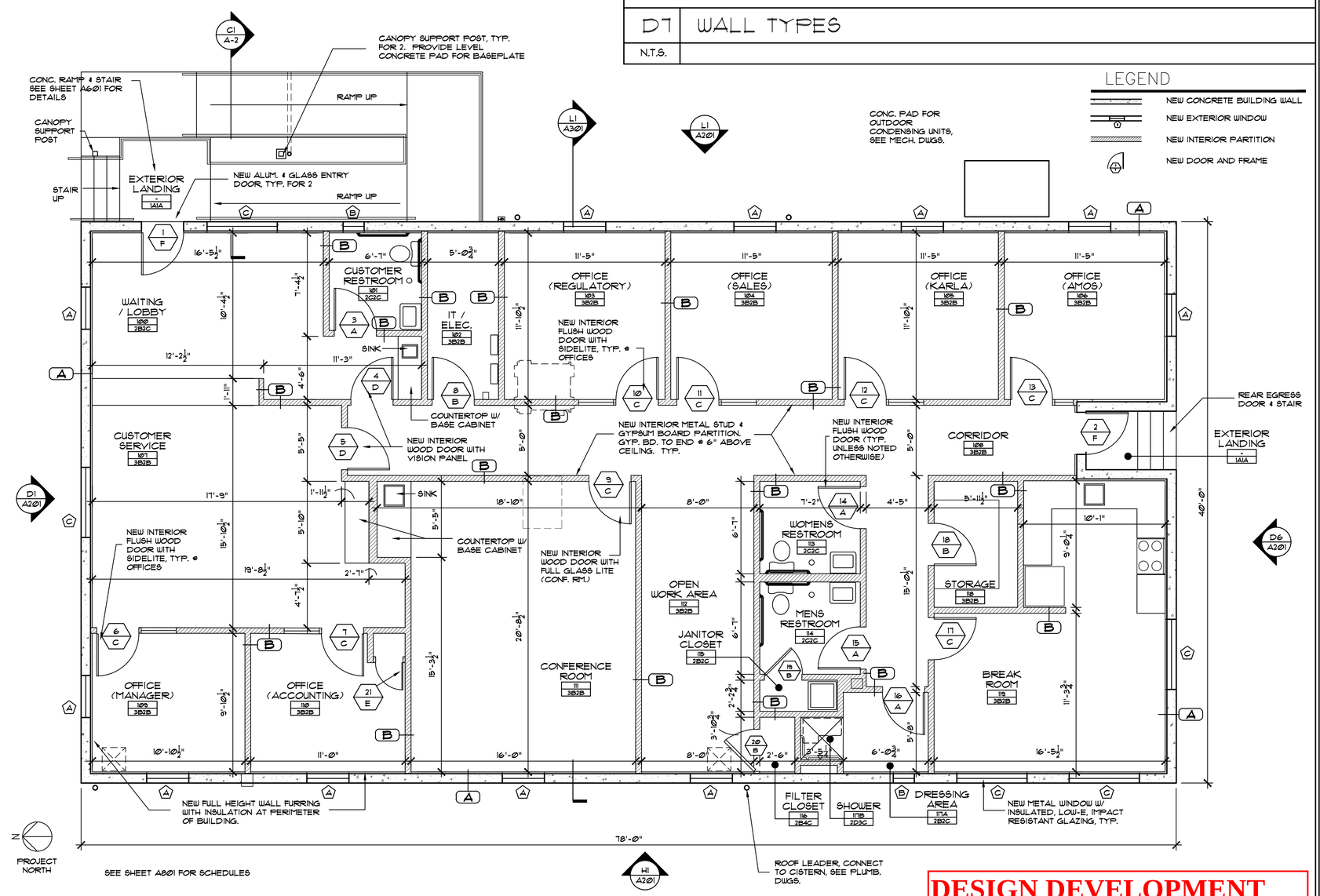


## LEGEND

- NEW CONCRETE BUILDING WALL
- NEW EXTERIOR WINDOW
- NEW INTERIOR PARTITION
- NEW DOOR AND FRAME

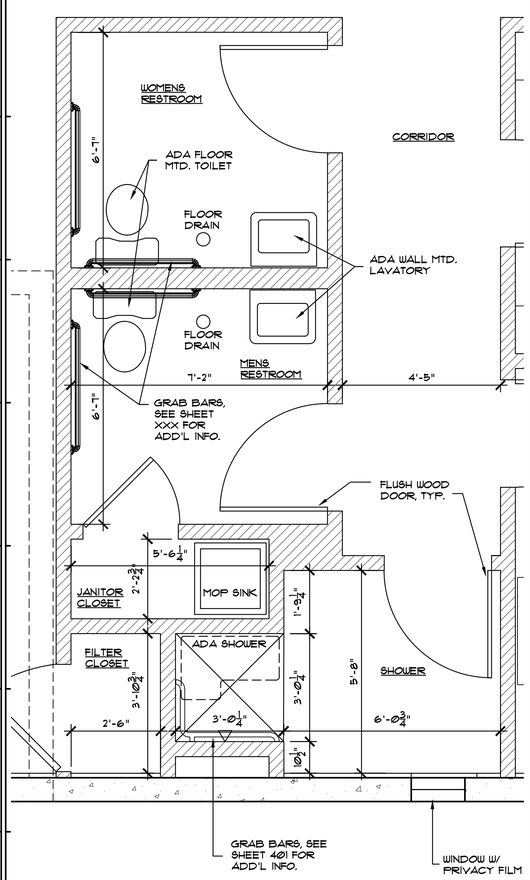


L1 ENLARGED PLAN

1/2" EMPLOYEE RESTROOMS & SHOWER

L3 FLOOR PLAN

1/4"

**DESIGN DEVELOPMENT**
**NOT FOR CONSTRUCTION**


BENTON CONSTRUCTION, LLC
3000 ORANGE GROVE, CHRISTIANSTED
ST. CROIX, U.S. VIRGIN ISLANDS 00820
PHONE: (340) 718-7223 FAX: (340) 718-4779
WEBSITE: WWW.BCVI.COM

ARCHITECT
SILVERBERG ASSOCIATES VI, P.C.
ARCHITECTS
55 COMPANY STREET, SUITE B, CHRISTIANSTED
ST. CROIX, USVI 00820
NJ PHONE: (609) 921-1867 NJ FAX: (609) 921-8326

MEP ENGINEER
T.J.D. ENGINEERING ASSOCIATES, INC.
2 Hancock Drive, West Milford, N.J. 07480
Certificate of Authorization 24GA27944000
Phone 973-208-0054
Fax 973-208-0851

STRUCTURAL ENGINEER
HARRISON HAMNETT, P.C.
40 Knowles Street
Pennington, New Jersey 08534
Office (609) 818-1808
Fax (609) 818-1809

OWNER
Tropical SHIPPING


PROFESSIONAL SEAL:

THIS DRAWING SHALL NOT BE USED FOR CONSTRUCTION UNLESS A PROFESSIONAL'S SEAL AND SIGNATURE ARE ON THE DRAWING

PROJECT TITLE / DESCRIPTION:
TROPICAL SHIPPING NEW OFFICES

FACILITY LOCATION:
TROPICAL SHIPPING L.L.C. (LEASED PLOT)
PLOT NO. 8
EAST HOPE (H.O.V.I.C. LANDS)
QUEEN'S QUARTER, ST. CROIX USVI

DATE: 5-28-24

| NO: | REVISION: | DATE: |
|---|---|---|
| | | |

PROJECT NUMBER: 22254

DRAWING TITLE: FLOOR PLAN

SHEET NUMBER: A101

SHEET OF

## LEGEND

- GYP. BD. SOFFIT
- CEILING GRID
- RECESSED LED LIGHT FIXTURE
- RECESSED LED DOWN-LIGHT
- EXIT SIGN
- EMERGENCY LIGHTING (WALL PACK)

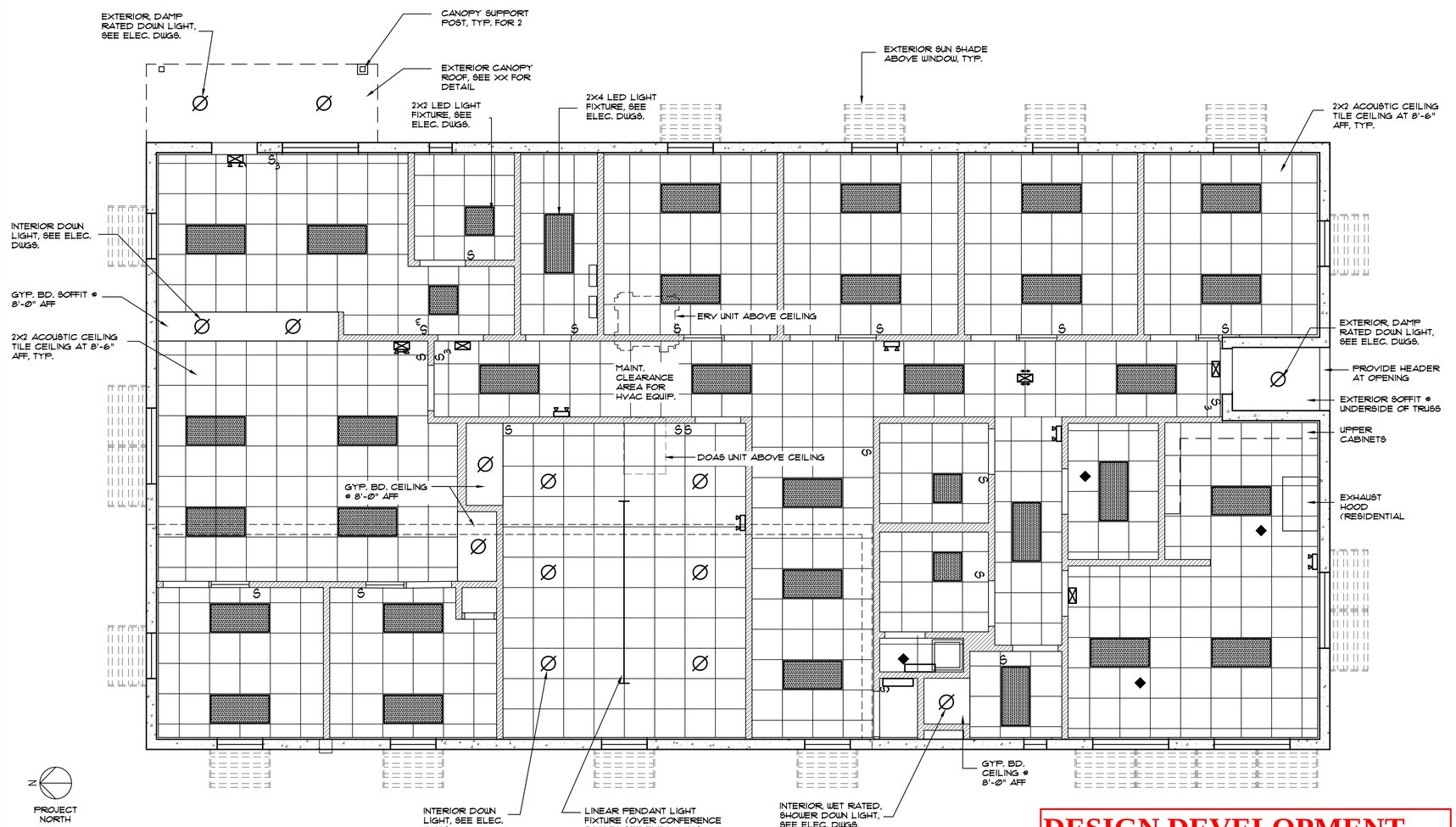


L3 REFLECTED CEILING PLAN

1/4"

**DESIGN DEVELOPMENT**
**NOT FOR CONSTRUCTION**


BENTON CONSTRUCTION, LLC
3000 ORANGE GROVE, CHRISTIANSTED
ST. CROIX, U.S. VIRGIN ISLANDS 00820
PHONE: (340) 718-7223 FAX: (340) 718-4719
WEBSITE: WWW.BCVI.COM

ARCHITECT
SILVERBERG ASSOCIATES VI, P.C.
ARCHITECTS
55 COMPANY STREET, SUITE 13, CHRISTIANSTED
ST. CROIX, USVI 00820
NJ PHONE: (609) 921-1867 NJ FAX: (609) 921-8326

MEP ENGINEER
T.J.D. ENGINEERING ASSOCIATES, INC.
2 Hancock Drive, West Milford, N.J. 07480
Certificate of Authorization 24GA27944000
Phone 973-208-0054
Fax 973-208-0851

STRUCTURAL ENGINEER
HARRISON HAMNETT, P.C.
40 Knowles Street
Pennington, New Jersey 08534
Office (609) 818-1808
Fax (609) 818-1809


OWNER
Tropical SHIPPING

PROFESSIONAL SEAL:
THIS DRAWING SHALL NOT BE USED FOR CONSTRUCTION UNLESS A PROFESSIONAL'S SEAL AND SIGNATURE ARE ON THE DRAWING

PROJECT TITLE / DESCRIPTION:
TROPICAL SHIPPING NEW OFFICES

FACILITY LOCATION:
TROPICAL SHIPPING L.L.C.
(LEASED PLOT)
PLOT NO. 8
EAST HOPE (H.O.V.I.C. LANDS)
QUEEN'S QUARTER, ST. CROIX USVI

DATE: 5-28-24

| NO: | REVISION: | DATE: |
|---|---|---|
| | | |

PROJECT NUMBER: 22254

DRAWING TITLE: REFLECTED CEILING PLAN

SHEET NUMBER: A102

SHEET OF

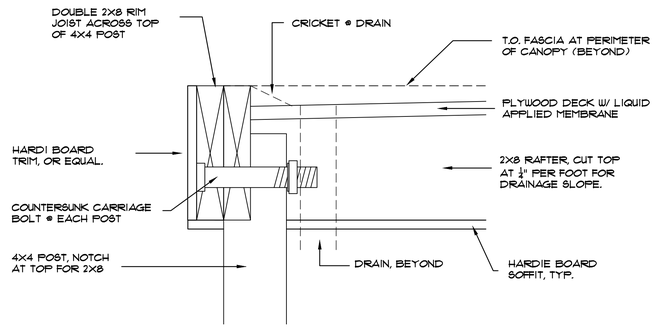


C1 SECTION @ WOOD POST

3"

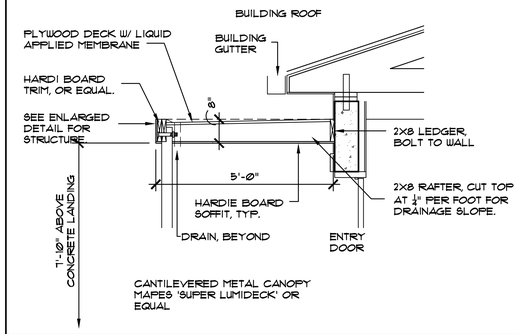


C5 ENTRANCE CANOPY SECTION

1/2"

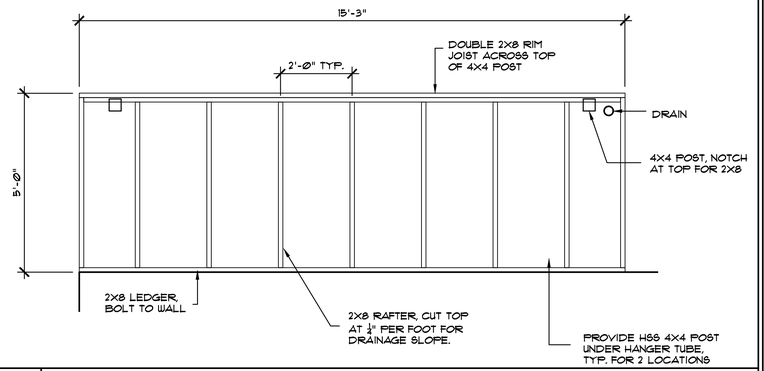


C7 ENTRANCE CANOPY FRAMING PLAN

1/2"

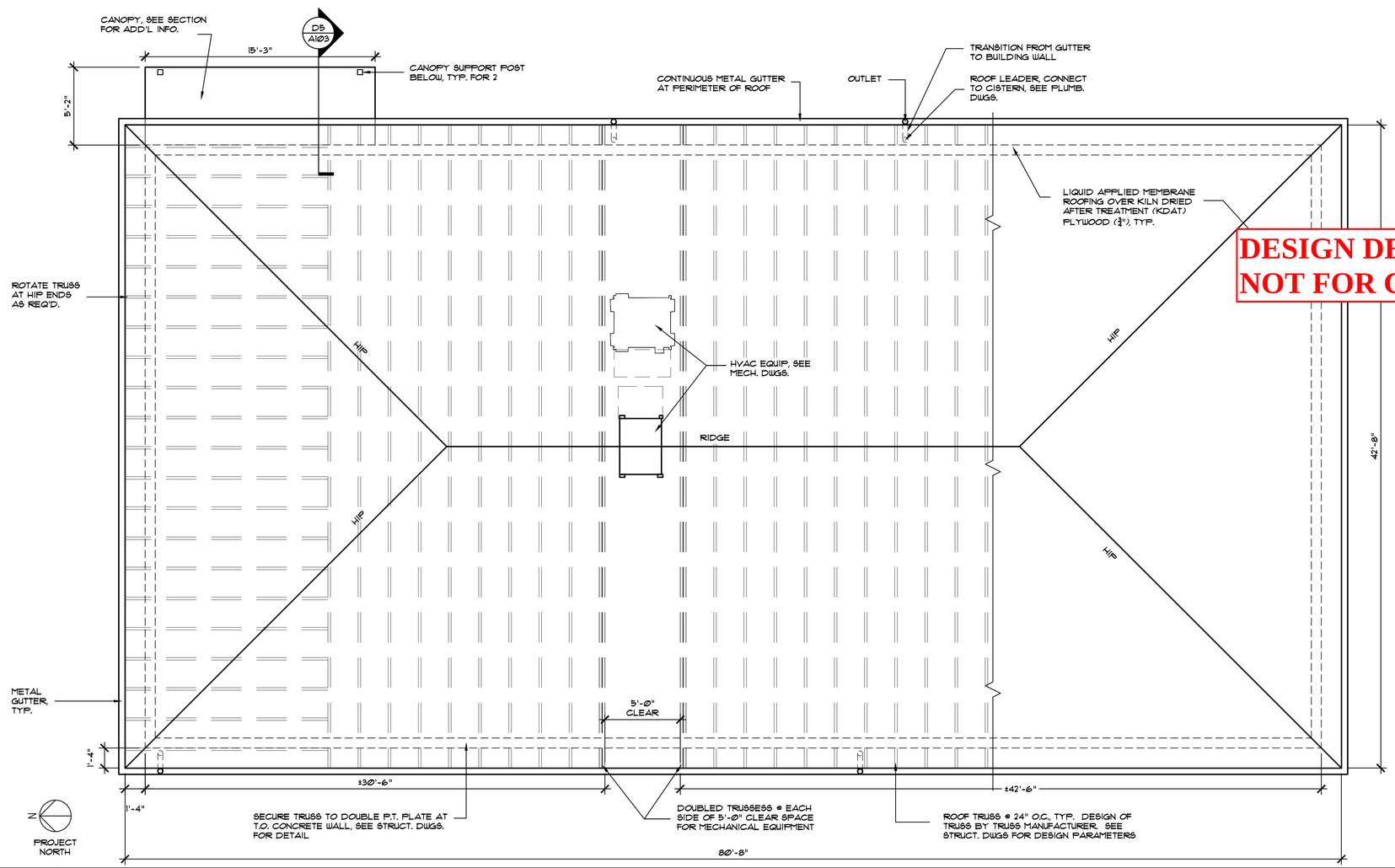


L3 ARCHITECTURAL ROOF FRAMING & ROOF PLAN

1/4"


BENTON CONSTRUCTION, LLC
3000 ORANGE GROVE, CHRISTIANSTED
ST. CROIX, U.S. VIRGIN ISLANDS 00820
PHONE: (340) 718-7223 FAX: (340) 718-4779
WEBSITE: WWW.BCVI.COM

ARCHITECT
SILVERBERG ASSOCIATES VI, P.C.
ARCHITECTS
55 COMPANY STREET, SUITE B, CHRISTIANSTED
ST. CROIX, USVI 00820
NJ PHONE: (609) 921-1867 NJ FAX: (609) 921-8326

MEP ENGINEER
T.J.D. ENGINEERING ASSOCIATES, INC.
2 Hancock Drive, West Milford, N.J. 07480
Certificate of Authorization 24GA27944000
Phone 973-208-0054
Fax 973-208-0851

STRUCTURAL ENGINEER
HARRISON HAMNETT, P.C.
40 Knowles Street
Pennington, New Jersey 08534
Office (609) 818-1808
Fax (609) 818-1809


OWNER
Tropical SHIPPING

PROFESSIONAL SEAL:

**DESIGN DEVELOPMENT**
**NOT FOR CONSTRUCTION**

THIS DRAWING SHALL NOT BE USED FOR CONSTRUCTION UNLESS A PROFESSIONAL'S SEAL AND SIGNATURE ARE ON THE DRAWING

PROJECT TITLE / DESCRIPTION:
TROPICAL SHIPPING NEW OFFICES

FACILITY LOCATION:
TROPICAL SHIPPING L.L.C.
(LEASED PLOT)

PLOT NO. 8
EAST HOPE (H.O.V.I.C. LANDS)
QUEEN'S QUARTER, ST. CROIX USVI

DATE: 5-28-24

| NO: | REVISION: | DATE: |
|---|---|---|
| | | |

PROJECT NUMBER: 22254

DRAWING TITLE:
ROOF PLAN & DETAILS

SHEET NUMBER:
A103

SHEET OF

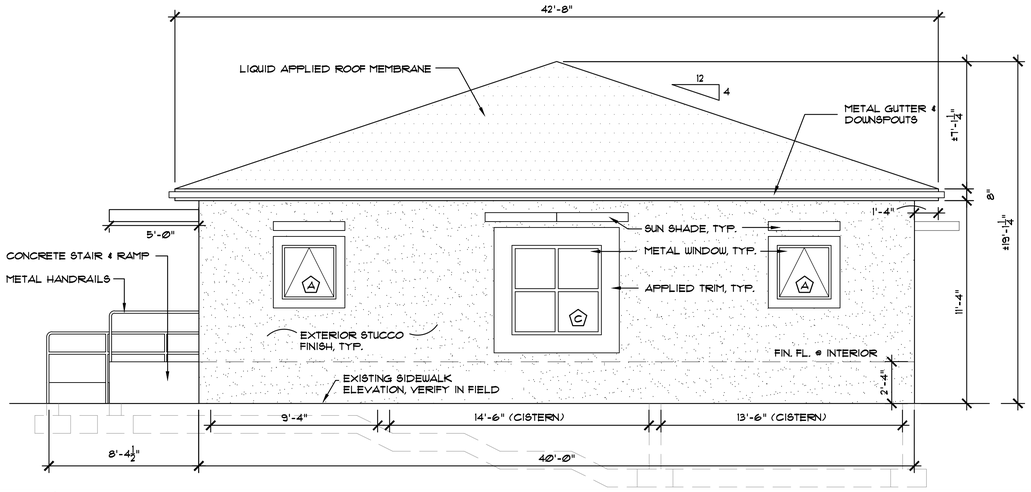


| D1 | NORTH ELEVATION (FROM PARKING LOT) |
|---|---|
| 1/4" | |

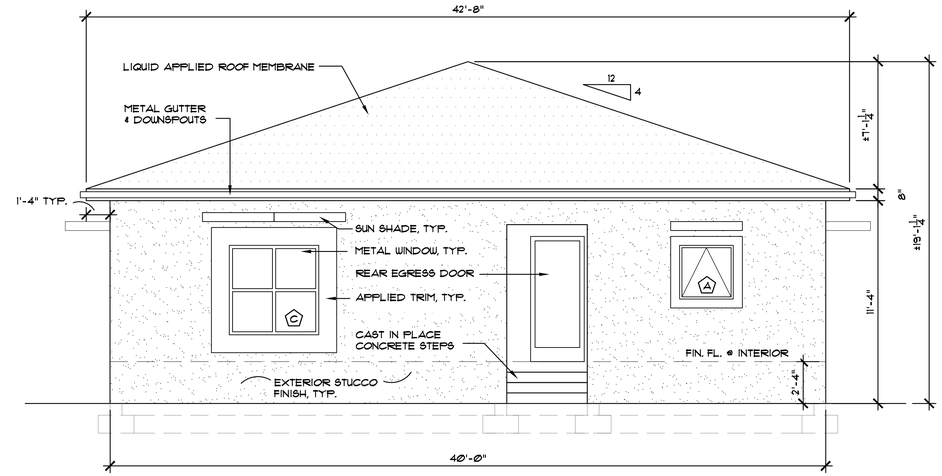


| D6 | SOUTH ELEVATION |
|---|---|
| 1/4" | |

**DESIGN DEVELOPMENT**
**NOT FOR CONSTRUCTION**

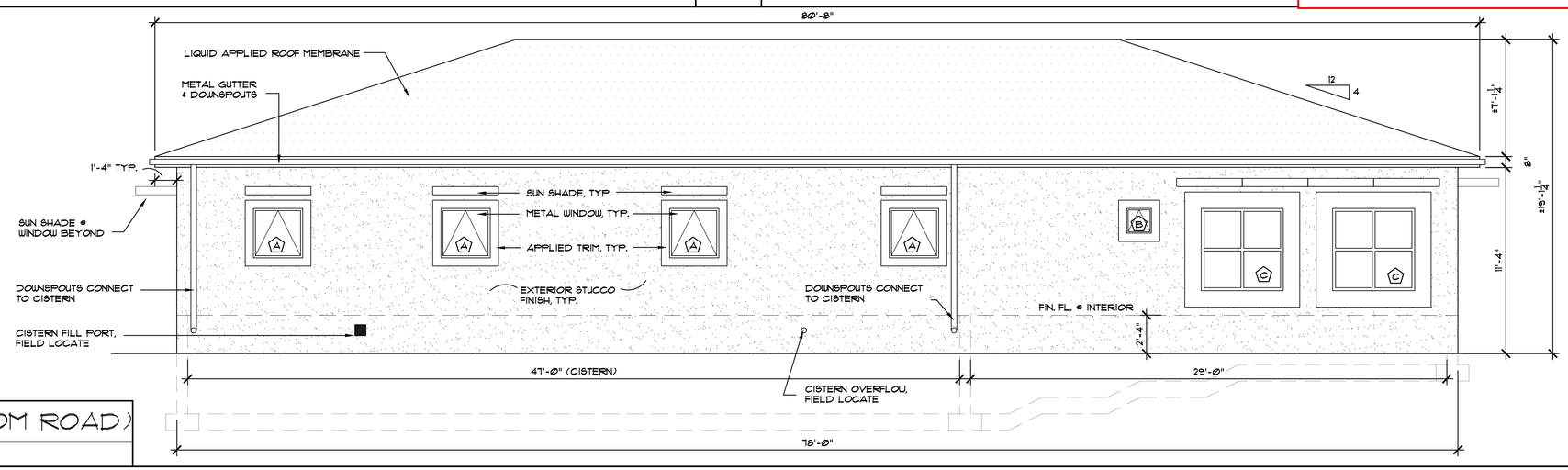


| H1 | WEST ELEV. (FROM ROAD) |
|---|---|
| 1/4" | |

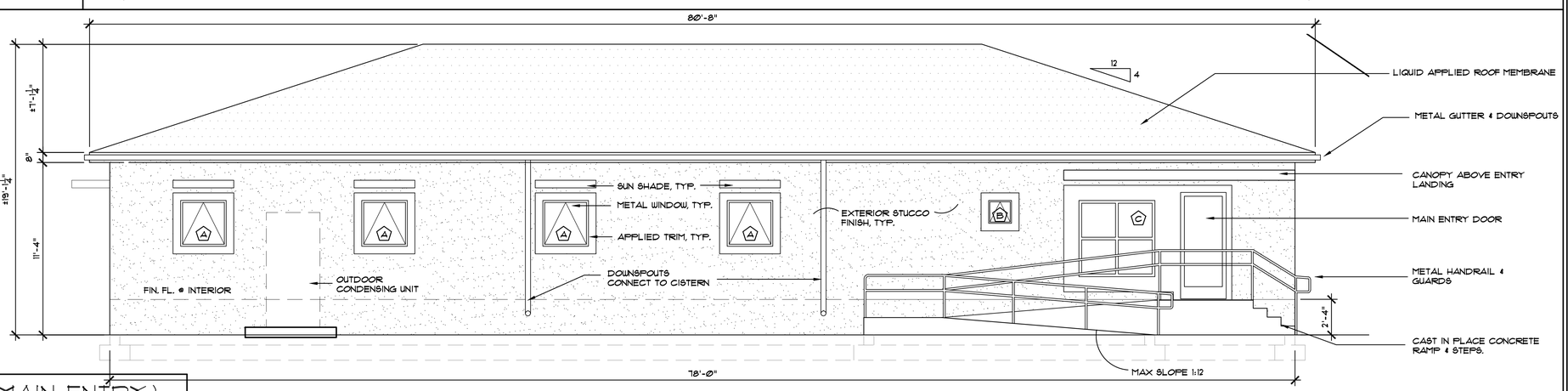


| L1 | EAST ELEVATION (MAIN ENTRY) |
|---|---|
| 1/4" | |


BENTON CONSTRUCTION, LLC
3000 ORANGE GROVE, CHRISTIANSTED
ST. CROIX, U.S. VIRGIN ISLANDS 00820
PHONE: (340) 718-7222 FAX: (340) 718-4779
WEBSITE: WWW.BCVI.COM

ARCHITECT
SILVERBERG ASSOCIATES VI, P.C.
ARCHITECTS
55 COMPANY STREET, SUITE B, CHRISTIANSTED
ST. CROIX, USVI 00820
NJ PHONE: (609) 921-1867 NJ FAX: (609) 921-8326

MEP ENGINEER
T.J.D. ENGINEERING ASSOCIATES, INC.
2 Hancock Drive, West Milford, N.J. 07480
Certificate of Authorization 24GA27944000
Phone 973-208-0054
Fax 973-208-0851

STRUCTURAL ENGINEER
HARRISON HAMNETT, P.C.
40 Knowles Street
Pennington, New Jersey 08534
Office (609) 818-1808
Fax (609) 818-1809


OWNER
Tropical SHIPPING

PROFESSIONAL SEAL:
THIS DRAWING SHALL NOT BE USED FOR CONSTRUCTION UNLESS A PROFESSIONAL'S SEAL AND SIGNATURE ARE ON THE DRAWING

PROJECT TITLE / DESCRIPTION:
TROPICAL SHIPPING NEW OFFICES

FACILITY LOCATION:
TROPICAL SHIPPING L.L.C.
(LEASED PLOT)

PLOT NO. 8
EAST HOPE (H.O.V.I.C. LANDS)
QUEEN'S QUARTER, ST. CROIX USVI

DATE: 5-28-24

| NO: | REVISION: | DATE: |
|---|---|---|
| | | |

PROJECT NUMBER:
22254

DRAWING TITLE:
BUILDING ELEVATIONS

SHEET NUMBER:
A201

SHEET OF

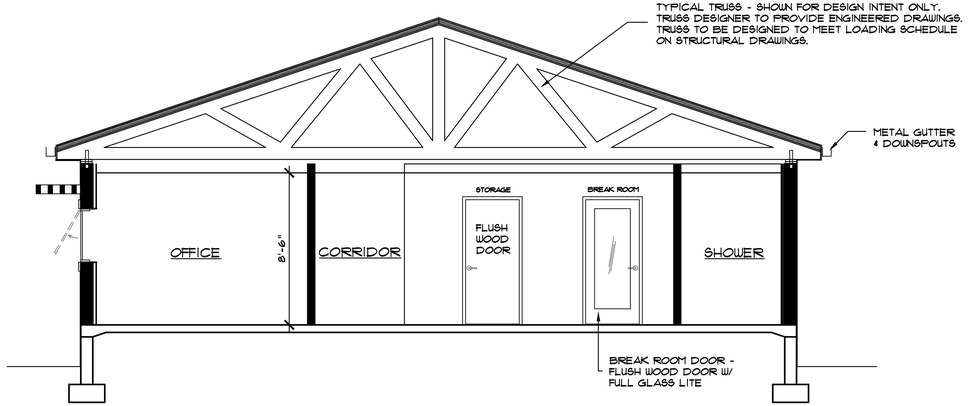


D1 SECTION / INTERIOR ELEVATION AT CONF. ROOM & CUST. SVC.

1/4"

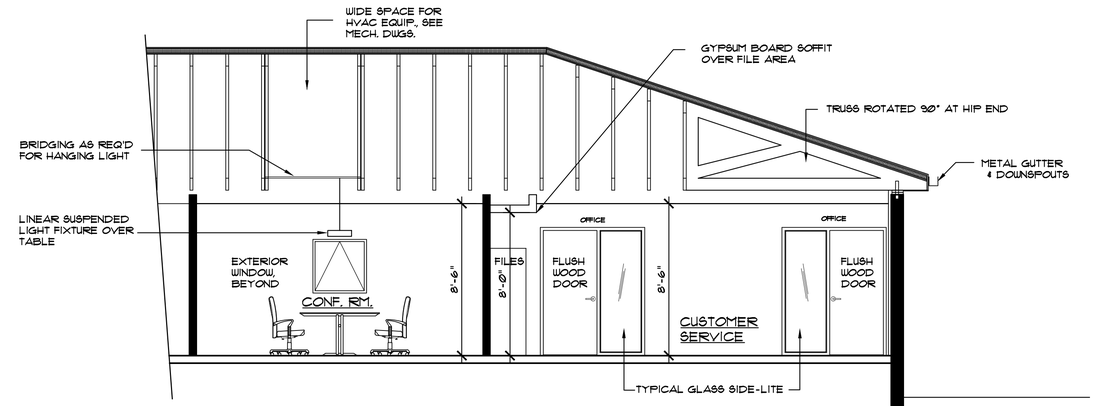


D6 SECTION / INTERIOR ELEVATION AT CONF. ROOM & CUST. SVC.

1/4"

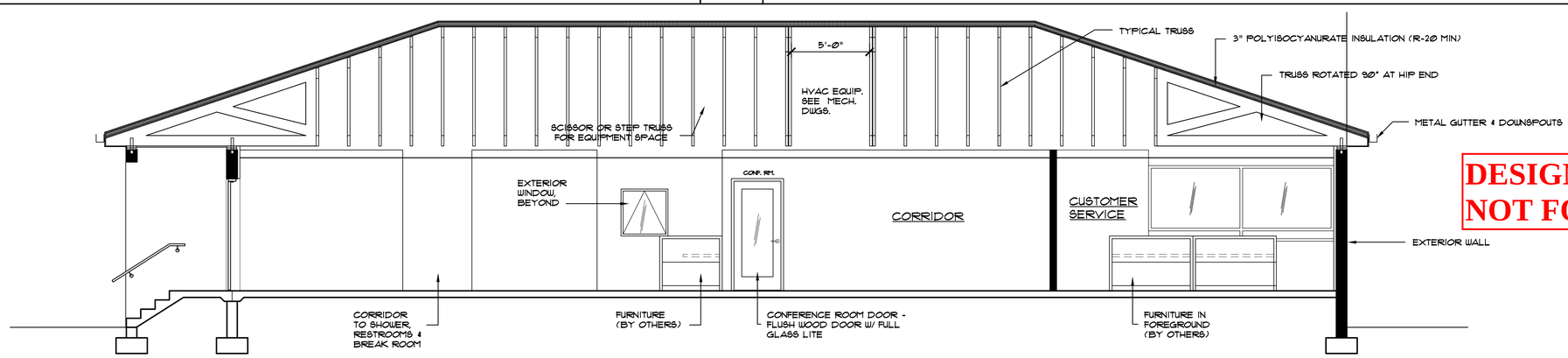


H1 SECTION / INTERIOR ELEVATION AT CORRIDOR (FACING SOUTH)

1/4"

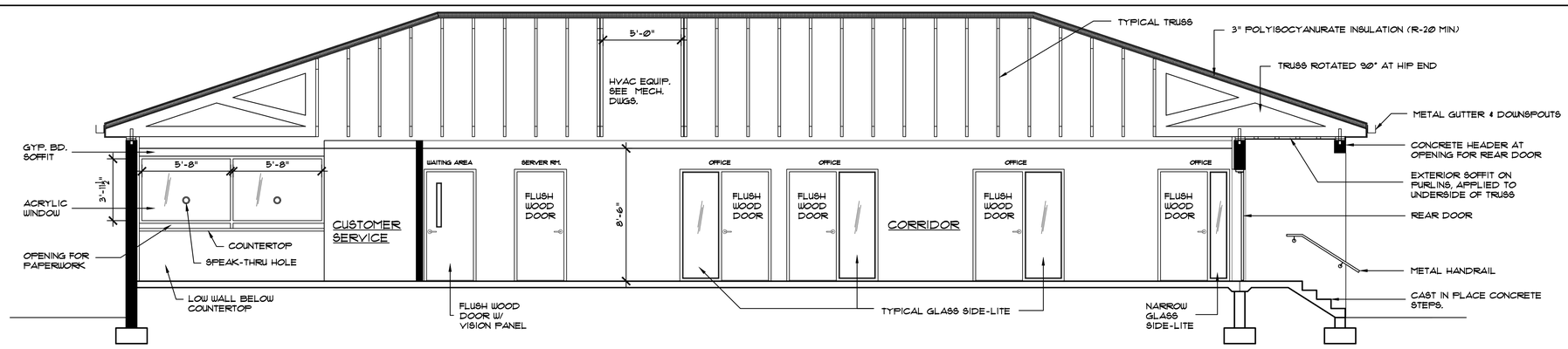


L1 SECTION / INTERIOR ELEVATION AT CORRIDOR (FACING NORTH)

1/4"


BENTON CONSTRUCTION, LLC
3000 ORANGE GROVE, CHRISTIANSTED
ST. CROIX, U.S. VIRGIN ISLANDS 00820
PHONE: (340) 718-7222 FAX: (340) 718-4779
WEBSITE: WWW.BCVI.COM

ARCHITECT
SILVERBERG ASSOCIATES VI, P.C.
ARCHITECTS
55 COMPANY STREET, SUITE B, CHRISTIANSTED
ST. CROIX, USVI 00820
NJ PHONE: (609) 921-1867 NJ FAX: (609) 921-8326

MEP ENGINEER
T.J.D. ENGINEERING ASSOCIATES, INC.
2 Hancock Drive, West Milford, N.J. 07480
Certificate of Authorization 24GA27944000
Phone 973-208-0054
Fax 973-208-0851

STRUCTURAL ENGINEER
HARRISON HAMNETT, P.C.
40 Knowles Street
Pennington, New Jersey 08534
Office (609) 818-1808
Fax (609) 818-1809


OWNER
Tropical SHIPPING

PROFESSIONAL SEAL:

**DESIGN DEVELOPMENT NOT FOR CONSTRUCTION**

THIS DRAWING SHALL NOT BE USED FOR CONSTRUCTION UNLESS A PROFESSIONAL'S SEAL AND SIGNATURE ARE ON THE DRAWING

PROJECT TITLE / DESCRIPTION:
TROPICAL SHIPPING NEW OFFICES

FACILITY LOCATION:
TROPICAL SHIPPING L.L.C.
(LEASED PLOT)

PLOT NO. 8
EAST HOPE (H.O.V.I.C. LANDS)
QUEEN'S QUARTER, ST. CROIX USVI

DATE: 5-28-24

| NO: | REVISION: | DATE: |
|---|---|---|
| | | |

PROJECT NUMBER: 22254

DRAWING TITLE:
INTERIOR ELEVATIONS

SHEET NUMBER:
A202

SHEET OF

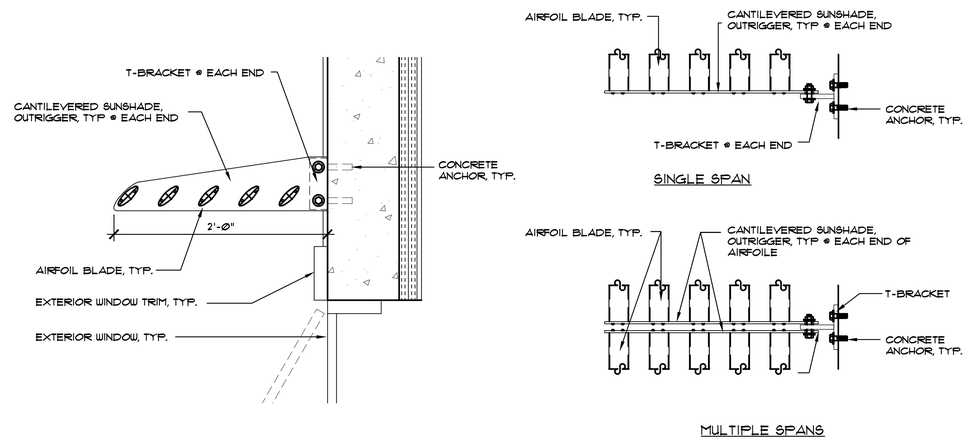


| D1 | SUN SHADE SECTION & MOUNTING DETAIL |
|---|---|
| 1-1/2" | |

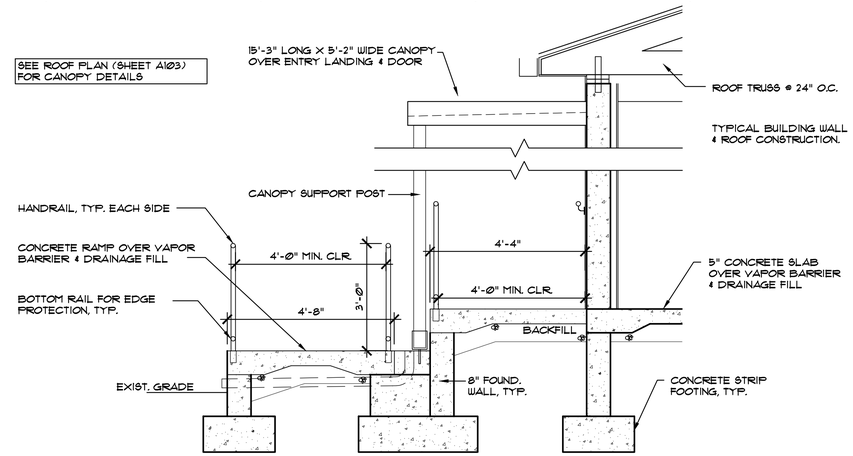


| D6 | RAMP SECTION |
|---|---|
| 1/4" | |

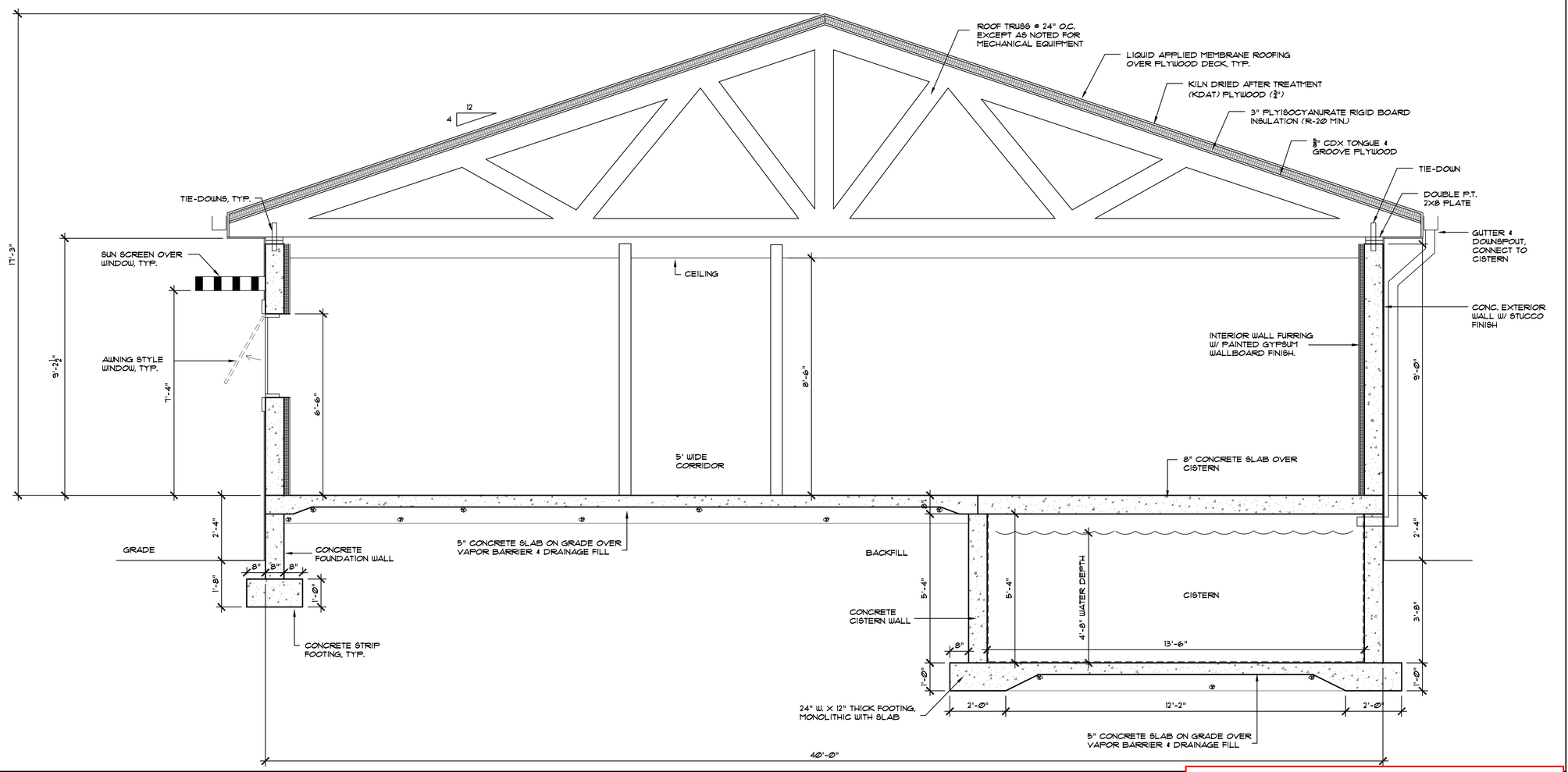


| L1 | BUILDING SECTION |
|---|---|
| 1/2" | |

**DESIGN DEVELOPMENT**
**NOT FOR CONSTRUCTION**


BENTON CONSTRUCTION, LLC
3000 ORANGE GROVE, CHRISTIANSTED
ST. CROIX, U.S. VIRGIN ISLANDS 00820
PHONE: (340) 718-7223 FAX: (340) 718-4719
WEBSITE: WWW.BCVI.COM

ARCHITECT
SILVERBERG ASSOCIATES VI, P.C.
ARCHITECTS
55 COMPANY STREET, SUITE 13, CHRISTIANSTED
ST. CROIX, USVI 00820
NJ PHONE: (609) 921-1867 NJ FAX: (609) 921-8326

MEP ENGINEER
T.J.D. ENGINEERING ASSOCIATES, INC.
2 Hancock Drive, West Milford, N.J. 07480
Certificate of Authorization 24GA27944000
Phone 973-208-0054
Fax 973-208-0851

STRUCTURAL ENGINEER
HARRISON HAMNETT, P.C.
40 Knowles Street
Pennington, New Jersey 08534
Office (609) 818-1808
Fax (609) 818-1809


OWNER
Tropical SHIPPING

PROFESSIONAL SEAL:
THIS DRAWING SHALL NOT BE USED FOR CONSTRUCTION UNLESS A PROFESSIONAL'S SEAL AND SIGNATURE ARE ON THE DRAWING

PROJECT TITLE / DESCRIPTION:
TROPICAL SHIPPING NEW OFFICES

FACILITY LOCATION:
TROPICAL SHIPPING L.L.C. (LEASED PLOT)
PLOT NO. 8
EAST HOPE (H.O.V.I.C. LANDS)
QUEEN'S QUARTER, ST. CROIX USVI

DATE: 5-28-24

| NO: | REVISION: | DATE: |
|---|---|---|
| | | |

PROJECT NUMBER: 22254

DRAWING TITLE: BUILDING SECTION

SHEET NUMBER: A301

SHEET OF

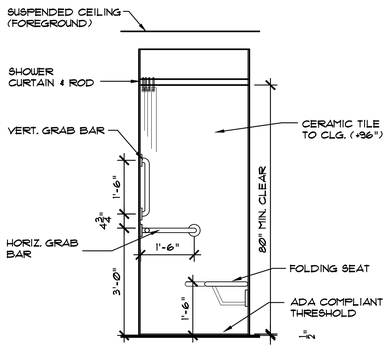


SHOWER - ELEVATION 'A'

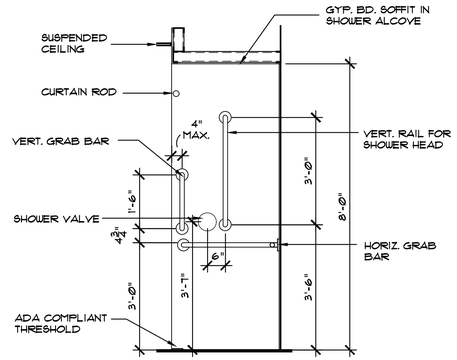


CONTROL WALL - ELEVATION 'B'

PROVIDE CONCEALED BLOCKING AS REQUIRED BEHIND ALL ACCESSORIES

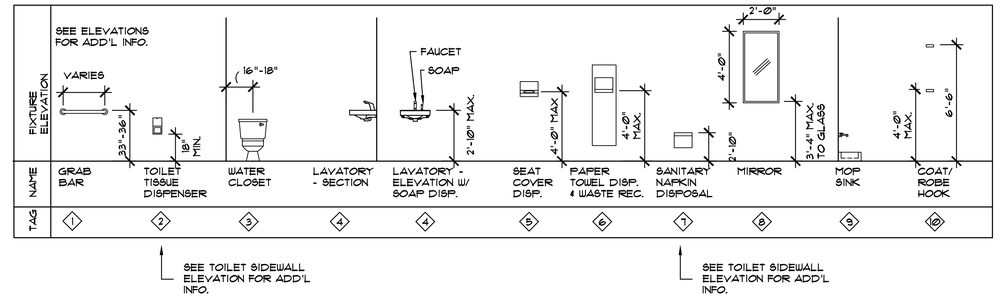


## D1 SHOWER ELEVATIONS

1/2"

## D5 FIXTURE & ACCESSORY MOUNTING HEIGHTS

N.T.S.

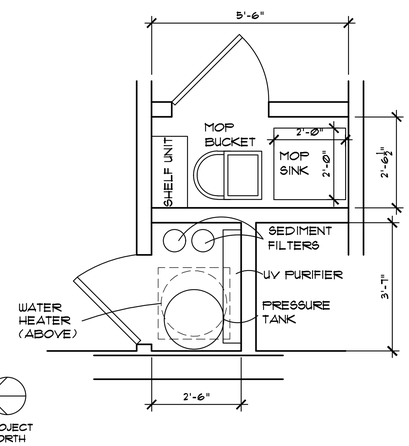


## H1 FILTER & JAN. CLOSETS

1/4"

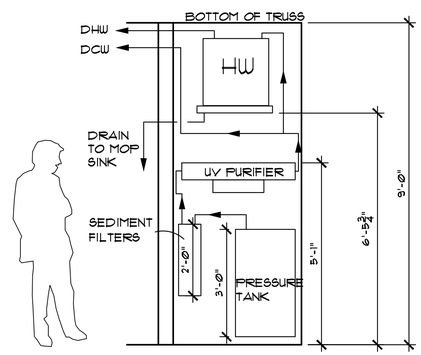


## H3 FILTER CLOSET ELEV.

1/4"

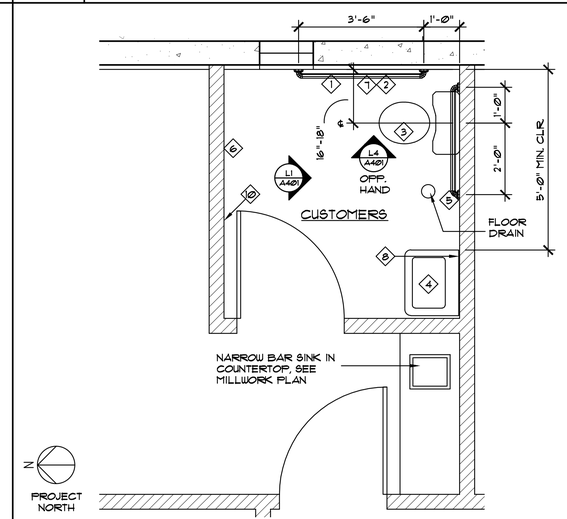


## H5 CUSTOMER RESTROOM PLAN

1/4"

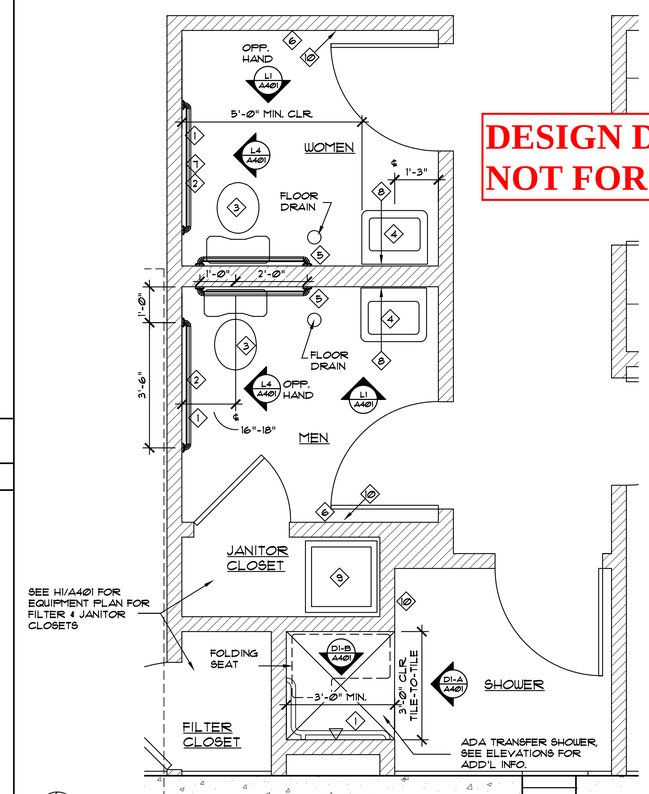


DESIGN DEVELOPMENT
NOT FOR CONSTRUCTION

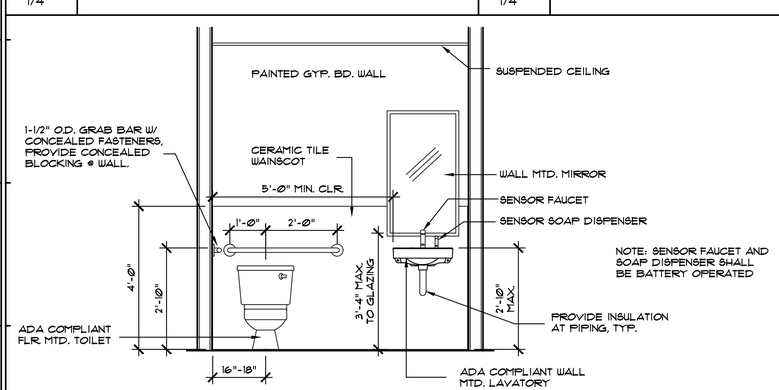


NOTE: SENSOR FAUCET AND SOAP DISPENSER SHALL BE BATTERY OPERATED

## L1 TOILET ROOM ELEVATION

1/2"

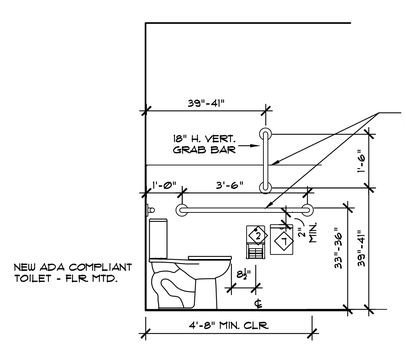


1-1/2" O.D. GRAB BAR W/ CONCEALED FASTENERS, PROVIDE CONCEALED BLOCKING @ WALL.

LEGEND (SEE D4/A104 FOR ADD'L INFO)

2 TOILET TISSUE DISPENSER

7 SANITARY NAPKIN DISPOSAL (WHERE APPLICABLE)

## L4 TOILET SIDEWALL ELEVATION

1/2"

## L8 EMPLOYEE RESTROOMS & SHOWER PLAN

1/4"


BENTON CONSTRUCTION, LLC
3000 ORANGE GROVE, CHRISTIANSTED
ST. CROIX, U.S. VIRGIN ISLANDS 00820
PHONE: (340) 718-7223 FAX: (340) 718-4719
WEBSITE: WWW.BCVI.COM

ARCHITECT
SILVERBERG ASSOCIATES VI, P.C.
ARCHITECTS
55 COMPANY STREET, SUITE B, CHRISTIANSTED
ST. CROIX, USVI 00820
NJ PHONE: (609) 921-1867 NJ FAX: (609) 921-8326

MEP ENGINEER
T.J.D. ENGINEERING ASSOCIATES, INC.
2 Hancock Drive, West Milford, N.J. 07480
Certificate of Authorization 24GA27944000
Phone 973-208-0054
Fax 973-208-0851

STRUCTURAL ENGINEER
HARRISON HAMNETT, P.C.
40 Knowles Street
Pennington, New Jersey 08534
Office (609) 818-1808
Fax (609) 818-1809


OWNER
Tropical SHIPPING

PROFESSIONAL SEAL:

THIS DRAWING SHALL NOT BE USED FOR CONSTRUCTION UNLESS A PROFESSIONAL'S SEAL AND SIGNATURE ARE ON THE DRAWING

PROJECT TITLE / DESCRIPTION:
TROPICAL SHIPPING NEW OFFICES

FACILITY LOCATION:
TROPICAL SHIPPING L.L.C. (LEASED PLOT)
PLOT NO. 8
EAST HOPE (H.O.V.I.C. LANDS)
QUEEN'S QUARTER, ST. CROIX USVI

DATE: 5-28-24

| NO: | REVISION: | DATE: |
|---|---|---|
| | | |

PROJECT NUMBER: 22254

DRAWING TITLE:
TOILET FIXTURES & ACCESSORIES

SHEET NUMBER:
A401

SHEET OF

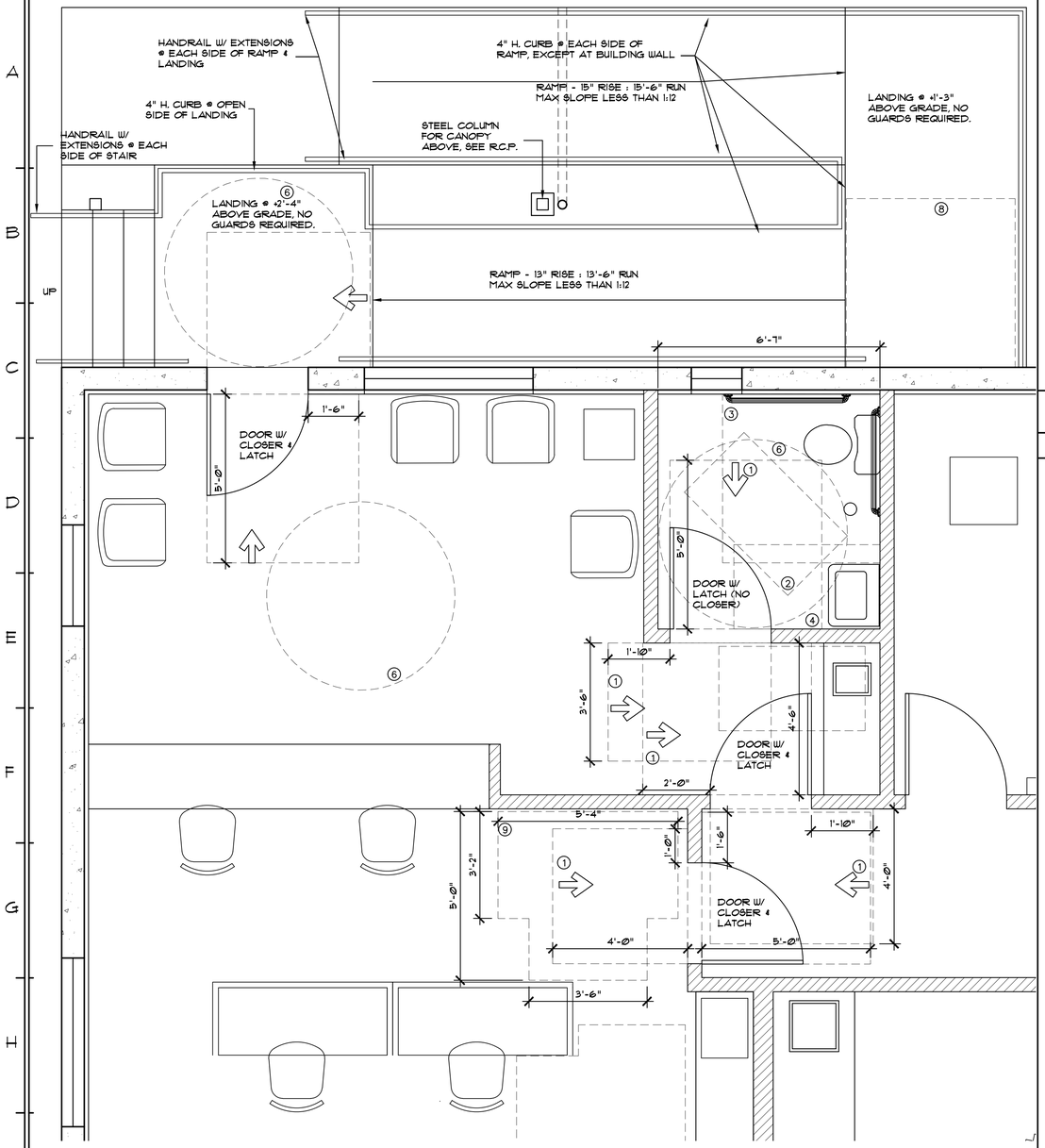


J1 ADA CLEARANCES - LOBBY & CUSTOMER RESTROOM

1/4"

## CLEARANCE NOTES

1. CLEAR FLOOR AREA @ DOOR, SEE PLAN FOR DIMENSIONS
2. 30" x 52" CLEAR FLOOR AREA (OUTSIDE OF DOOR SWING)
3. 60" W. x 56" D. CLEAR FLOOR AREA @ TOILET
4. 30" x 52" CLEAR FLOOR AREA @ LAVATORY
5. 30" x 52" CLEAR FLOOR AREA @ KITCHEN SINK, WORKSURFACE OR APPLIANCE
6. 67" DIAM. TURNING CIRCLE
7. 36" x 52" CLEAR FLOOR AREA @ TRANSFER SHOWER
8. 60" x 60" CLEAR FLOOR AREA @ RAMP LANDING WITH TURN
9. 64" x 60" T-SHAPED TURNING SPACE - NEW BUILDINGS - OPTION 2

C9 ADA CLEARANCE KEYNOTES

**DESIGN DEVELOPMENT**
**NOT FOR CONSTRUCTION**

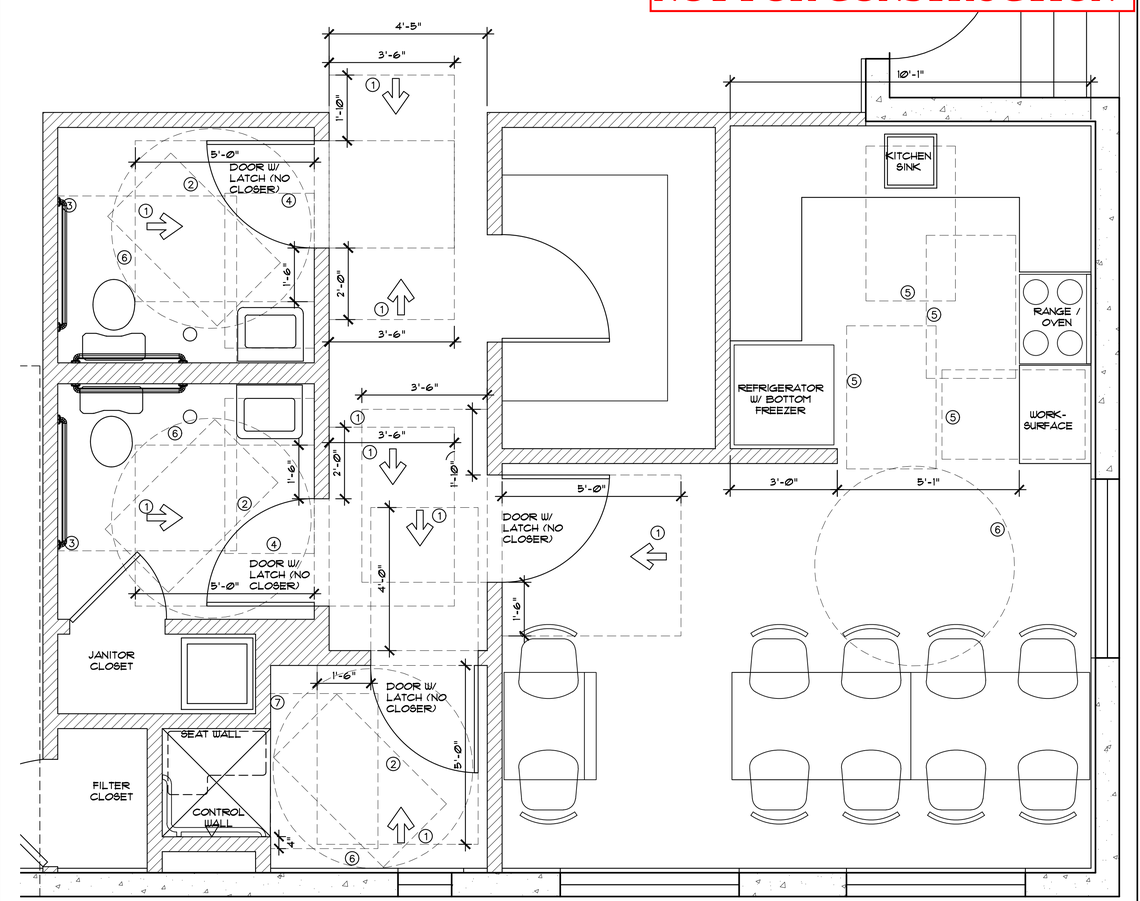


N
PROJECT NORTH

L5 ADA CLEARANCES - RESTROOMS, SHOWER & BREAK ROOM

1/4"


BENTON CONSTRUCTION, LLC
3000 ORANGE GROVE, CHRISTIANSTED
ST. CROIX, U.S. VIRGIN ISLANDS 00820
PHONE: (340) 718-7223 FAX: (340) 718-4779
WEBSITE: WWW.BCVI.COM

ARCHITECT
SILVERBERG ASSOCIATES VI, P.C.
ARCHITECTS
55 COMPANY STREET, SUITE B, CHRISTIANSTED
ST. CROIX, USVI 00820
NJ PHONE: (609) 921-1867 NJ FAX: (609) 921-8326

MEP ENGINEER
T.J.D. ENGINEERING ASSOCIATES, INC.
2 Hancock Drive, West Milford, N.J. 07480
Certificate of Authorization 24GA27944000
Phone 973-208-0054
Fax 973-208-0851

STRUCTURAL ENGINEER
HARRISON HAMNETT, P.C.
40 Knowles Street
Pennington, New Jersey 08534
Office (609) 818-1808
Fax (609) 818-1809


OWNER
Tropical SHIPPING

PROFESSIONAL SEAL:
THIS DRAWING SHALL NOT BE USED FOR CONSTRUCTION UNLESS A PROFESSIONAL'S SEAL AND SIGNATURE ARE ON THE DRAWING

PROJECT TITLE / DESCRIPTION:
TROPICAL SHIPPING NEW OFFICES

FACILITY LOCATION:
TROPICAL SHIPPING L.L.C.
(LEASED PLOT)
PLOT NO. 8
EAST HOPE (H.O.V.I.C. LANDS)
QUEEN'S QUARTER, ST. CROIX USVI

DATE: 5-28-24

| NO: | REVISION: | DATE: |
|---|---|---|
| | | |

PROJECT NUMBER: 22254

DRAWING TITLE: ADA CLEARANCE PLANS

SHEET NUMBER: A402

SHEET OF

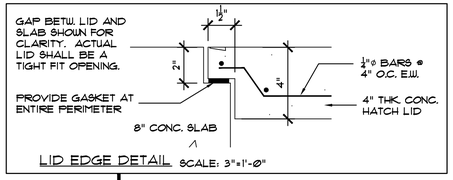


LID EDGE DETAIL SCALE: 3"=1'-0"

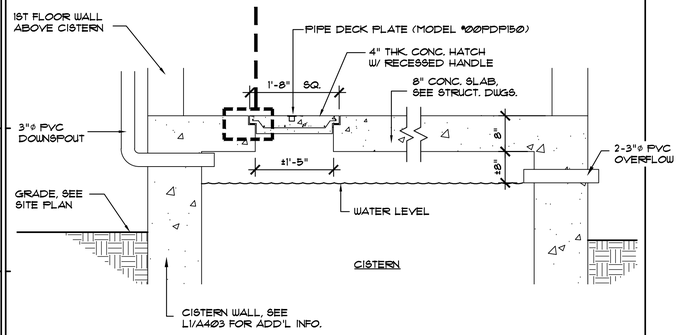


| D1 | CISTERN MANHOLE DETAIL |
|---|---|
| N.T.S. | |

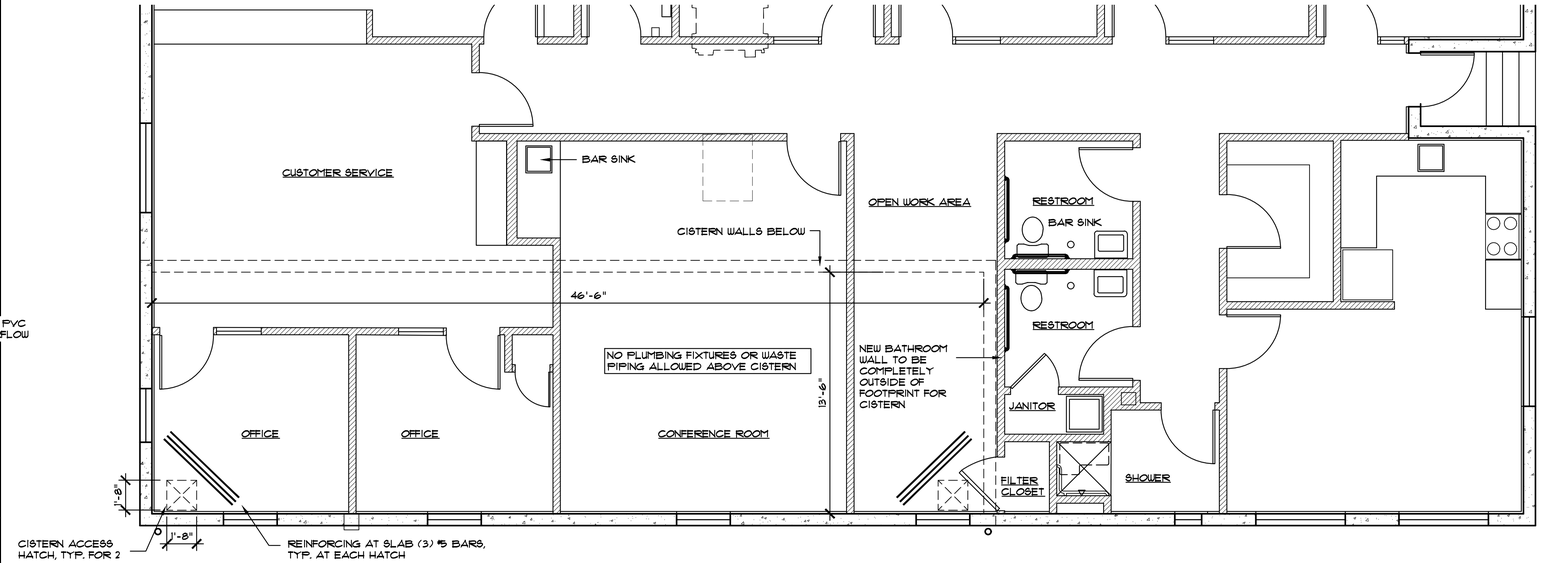


| E4 | PARTIAL FIRST FLOOR PLAN |
|---|---|
| 1/4" | |

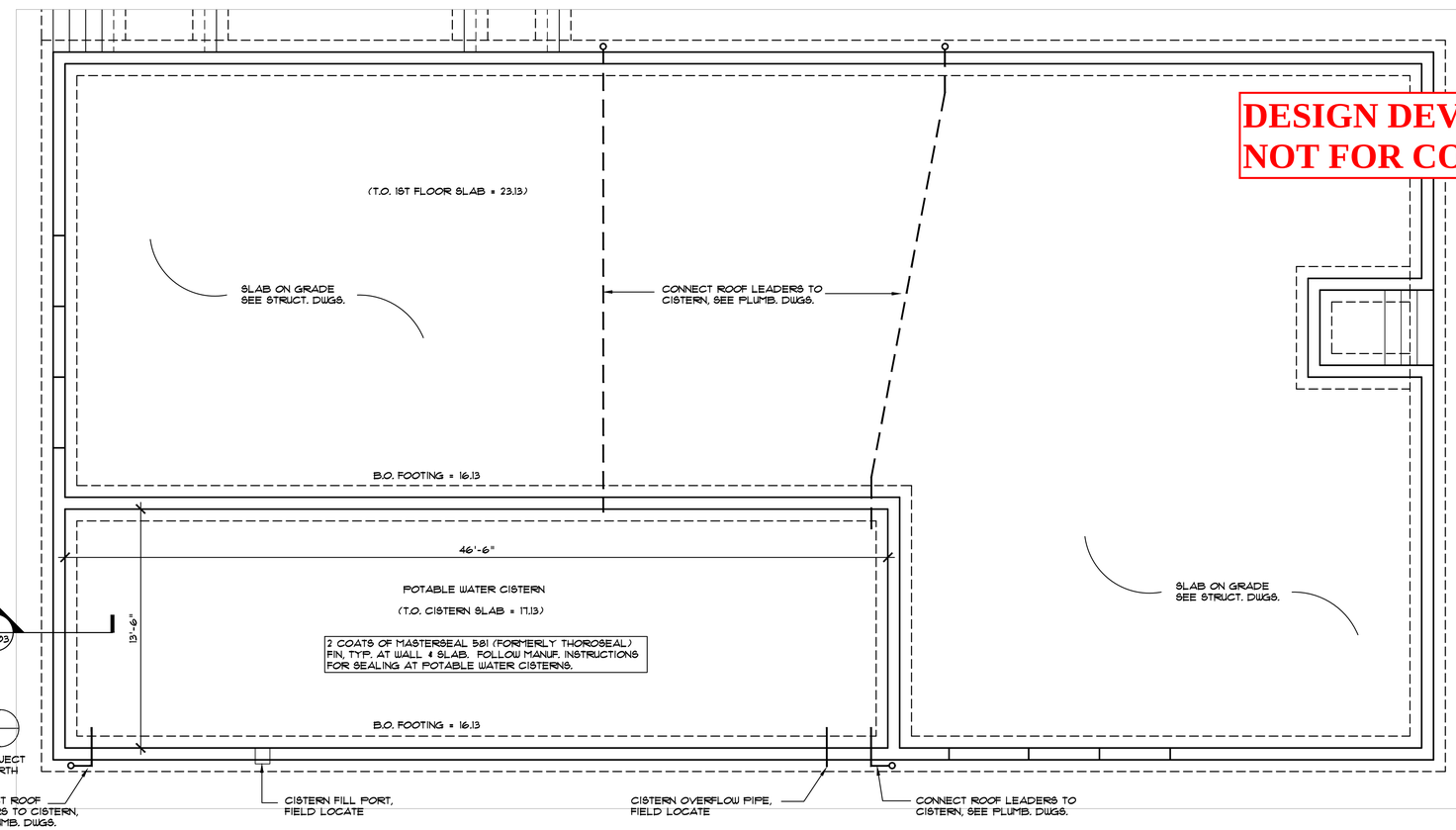


| L4 | FLOOR PLAN |
|---|---|
| 1/4" | |

| G1 | CISTERN FILL PORT DETAIL |
|---|---|
| N.T.S. | |

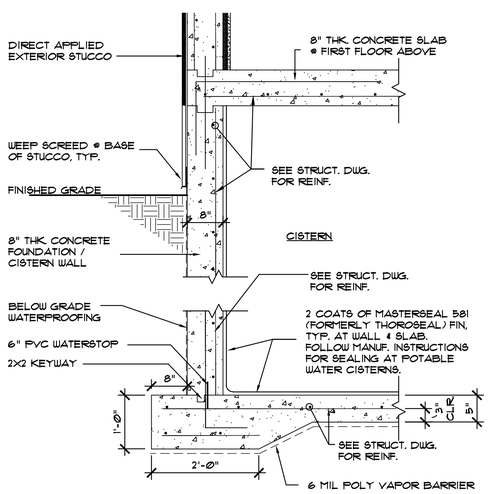


| L1 | CISTERN WALL DETAIL |
|---|---|
| 3/4" | |


BENTON CONSTRUCTION, LLC
3000 ORANGE GROVE, CHRISTIANSTED
ST. CROIX, U.S. VIRGIN ISLANDS 00820
PHONE: (340) 718-7223 FAX: (340) 718-4779
WEBSITE: WWW.BCVI.COM

ARCHITECT
SILVERBERG ASSOCIATES VI, P.C.
ARCHITECTS
55 COMPANY STREET, SUITE B, CHRISTIANSTED
ST. CROIX, USVI 00820
NJ PHONE: (609) 921-1867 NJ FAX: (609) 921-8326

MEP ENGINEER
T.J.D. ENGINEERING ASSOCIATES, INC.
2 Hancock Drive, West Milford, N.J. 07480
Certificate of Authorization 24GA27944000
Phone 973-208-0054
Fax 973-208-0851

STRUCTURAL ENGINEER
HARRISON HAMNETT, P.C.
40 Knowles Street
Pennington, New Jersey 08534
Office (609) 818-1808
Fax (609) 818-1809


OWNER
Tropical SHIPPING

PROFESSIONAL SEAL:

**DESIGN DEVELOPMENT**
**NOT FOR CONSTRUCTION**

THIS DRAWING SHALL NOT BE USED FOR CONSTRUCTION UNLESS A PROFESSIONAL'S SEAL AND SIGNATURE ARE ON THE DRAWING

PROJECT TITLE / DESCRIPTION:
TROPICAL SHIPPING NEW OFFICES

FACILITY LOCATION:
TROPICAL SHIPPING L.L.C. (LEASED PLOT)
PLOT NO. 8
EAST HOPE (H.O.V.I.C. LANDS)
QUEEN'S QUARTER, ST. CROIX USVI

DATE: 5-28-24

| NO: | REVISION: | DATE: |
|---|---|---|
| | | |

PROJECT NUMBER: 22254

DRAWING TITLE: CISTERN PLAN & DETAILS

SHEET NUMBER: A403

SHEET OF

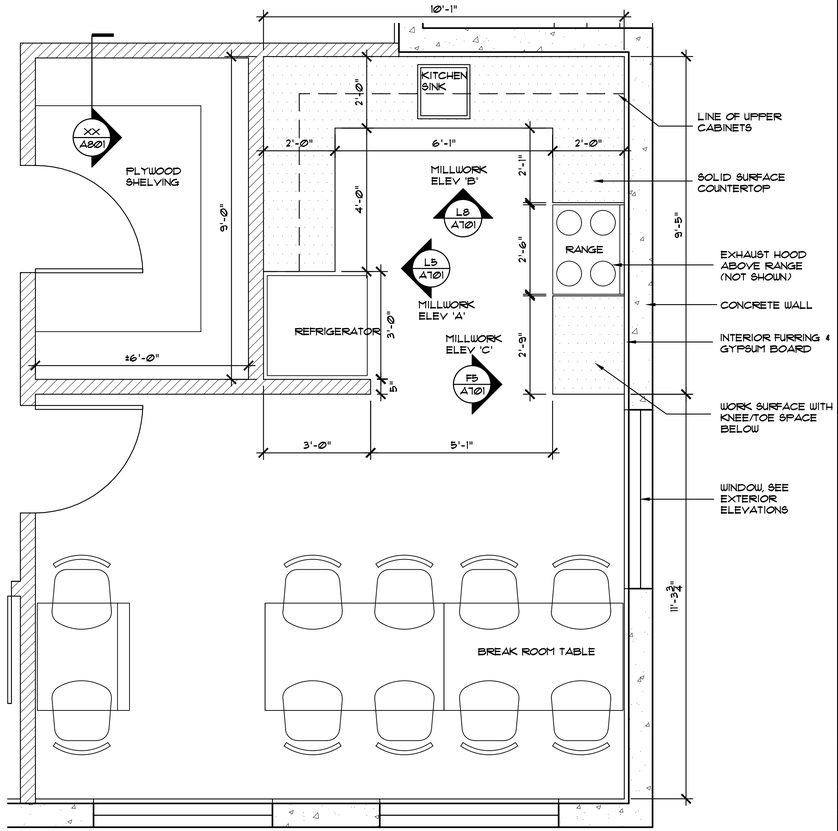


F1 MILLWORK PLAN - BREAK RM

1/2"

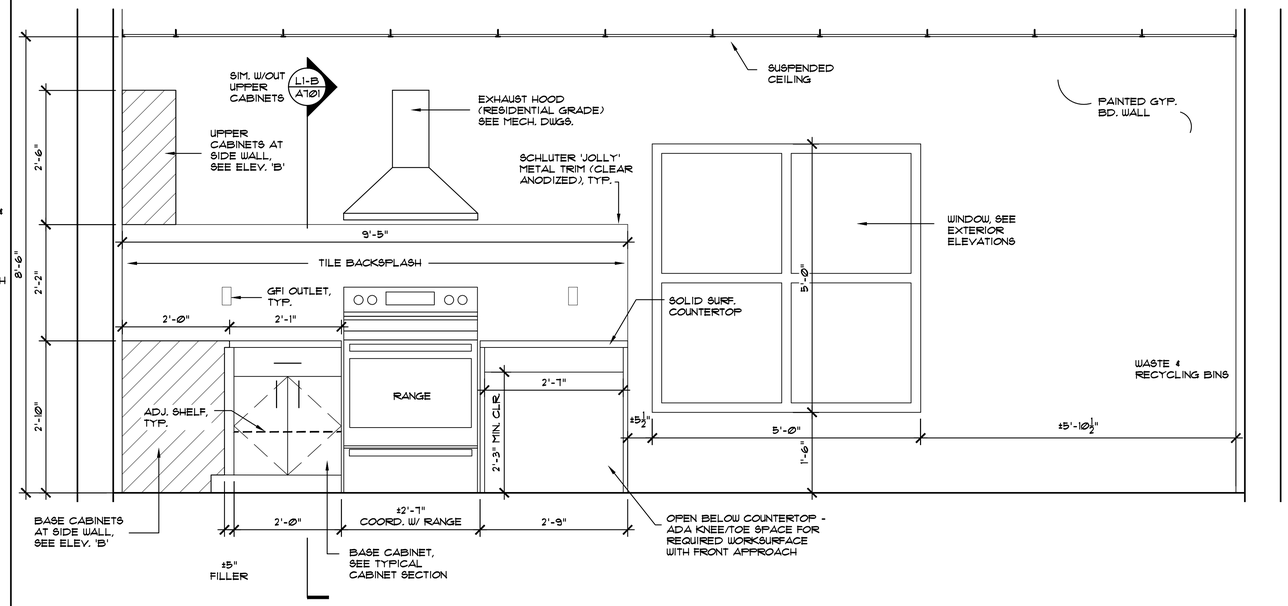


F5 MILLWORK ELEVATION 'C'

3/4"

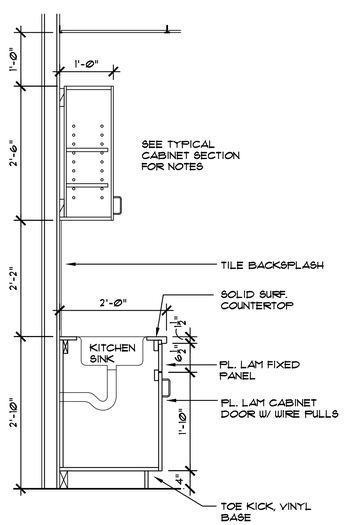


SINK CABINET (SECTION 'A')

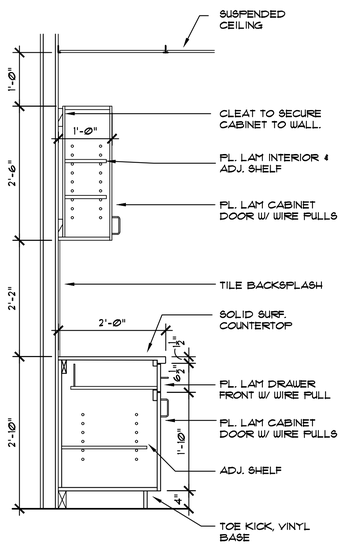


TYPICAL CABINETS (SECTION 'B')

L1 MILLWORK SECTIONS- BREAK RM

3/4"

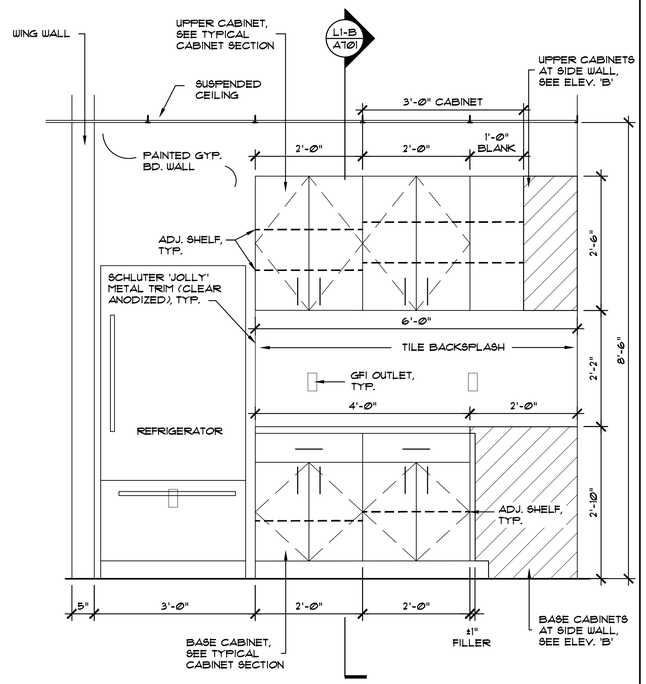


L5 MILLWORK ELEVATION 'A'

3/4"

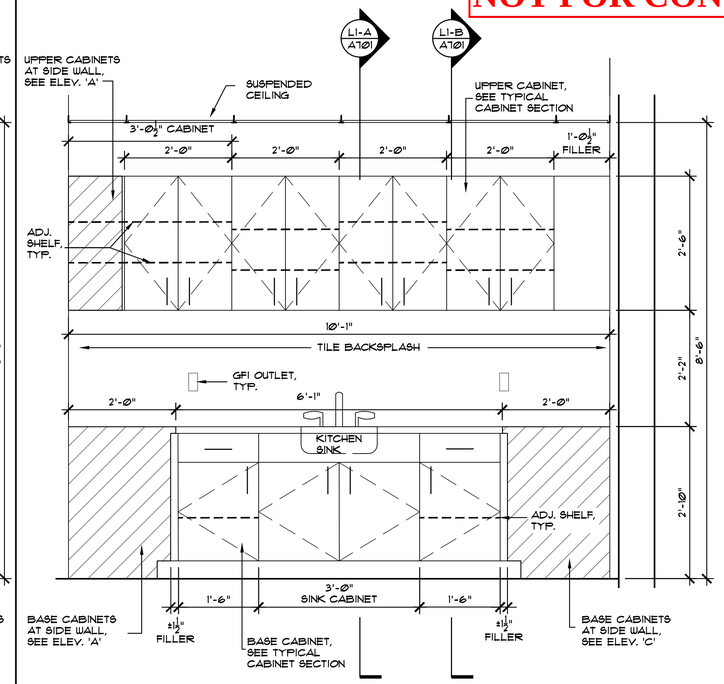


L8 MILLWORK ELEVATION 'B'

3/4"


BENTON CONSTRUCTION, LLC
3000 ORANGE GROVE, CHRISTIANSTED
ST. CROIX, U.S. VIRGIN ISLANDS 00820
PHONE: (340) 718-7222 FAX: (340) 718-4779
WEBSITE: WWW.BCVI.COM

ARCHITECT
SILVERBERG ASSOCIATES VI, P.C.
ARCHITECTS
55 COMPANY STREET, SUITE 13, CHRISTIANSTED
ST. CROIX, USVI 00820
NJ PHONE: (609) 921-1867 NJ FAX: (609) 921-8326

MEP ENGINEER
T.J.D. ENGINEERING ASSOCIATES, INC.
2 Hancock Drive, West Milford, N.J. 07480
Certificate of Authorization 24GA27944000
Phone 973-208-0054
Fax 973-208-0851

STRUCTURAL ENGINEER
HARRISON HAMNETT, P.C.
40 Knowles Street
Pennington, New Jersey 08534
Office (609) 818-1808
Fax (609) 818-1809


OWNER
Tropical SHIPPING

PROFESSIONAL SEAL:

**DESIGN DEVELOPMENT**
**NOT FOR CONSTRUCTION**

THIS DRAWING SHALL NOT BE USED FOR CONSTRUCTION UNLESS A PROFESSIONAL'S SEAL AND SIGNATURE ARE ON THE DRAWING

PROJECT TITLE / DESCRIPTION:
TROPICAL SHIPPING NEW OFFICES

FACILITY LOCATION:
TROPICAL SHIPPING L.L.C.
(LEASED PLOT)
PLOT NO. 8
EAST HOPE (H.O.V.I.C. LANDS)
QUEEN'S QUARTER, ST. CROIX USVI

DATE: 5-28-24

| NO: | REVISION: | DATE: |
|---|---|---|
| | | |

PROJECT NUMBER: 22254

DRAWING TITLE:
BREAK ROOM MILLWORK

SHEET NUMBER:
A701

SHEET OF

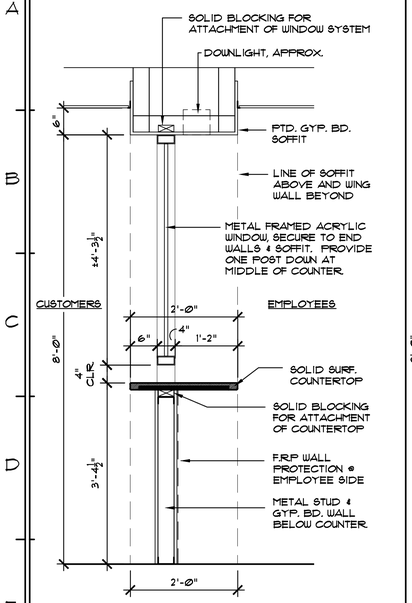


F1 MILLWORK SECTION
3/4" CUSTOMER SERVICE COUNTER

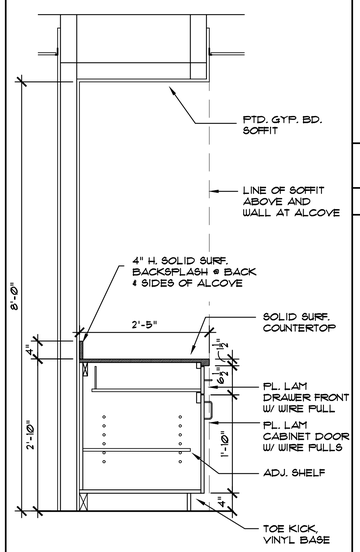


NOTE: PROVIDE FIXED PANEL IN LIEU OF DRAWER AT SINK CABINET. OMIT ADJ. SHELF

F3 MILLWORK SECTION
3/4" CONFERENCE ROOM

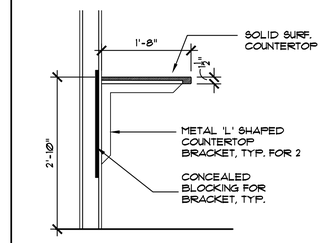


B4 MILLWORK SECTION
3/4" CUST. SERVICE WORK AREA

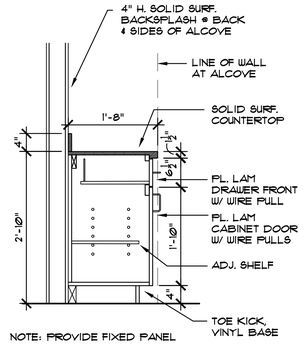


NOTE: PROVIDE FIXED PANEL IN LIEU OF DRAWER AT SINK CABINET. OMIT ADJ. SHELF

F4 MILLWORK SECTION
3/4" WAITING AREA

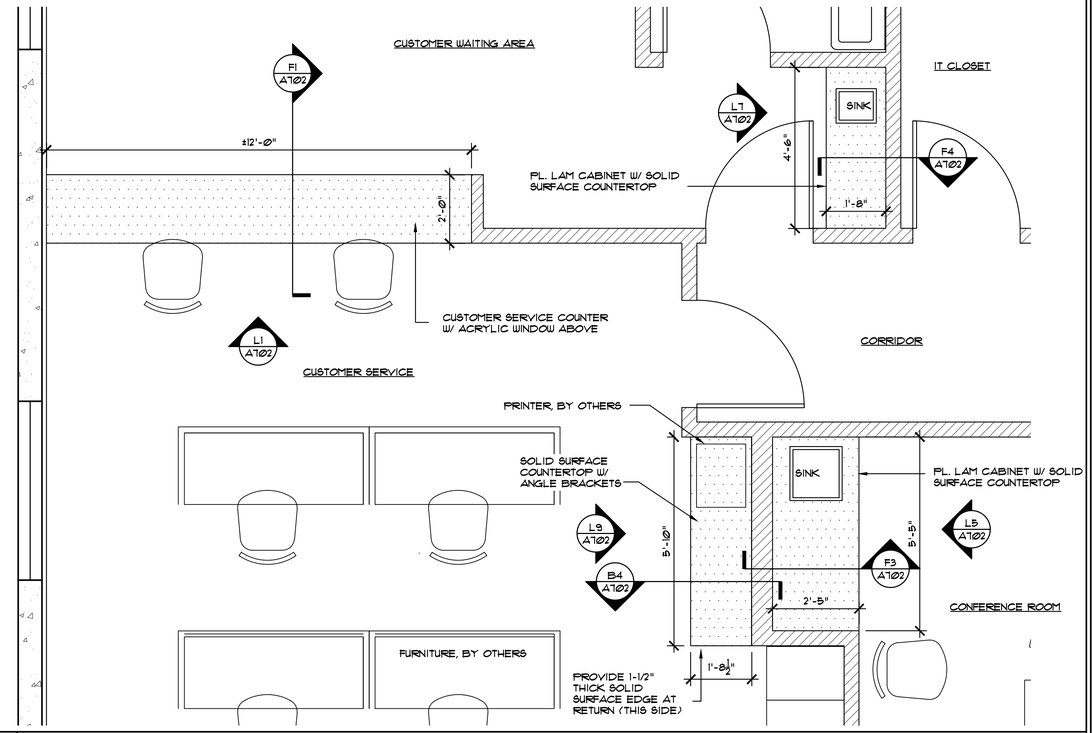


F6 MILLWORK PLAN - CUSTOMER SERVICE, WAITING & CONFERENCE RM.
1/2"

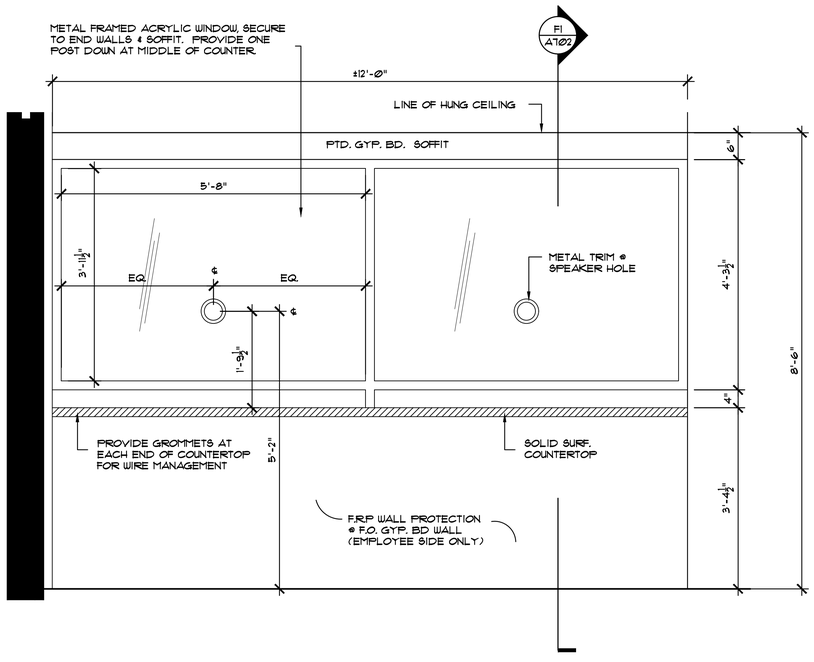


L1 MILLWORK ELEVATION - CUST. SERVICE COUNTER
3/4"

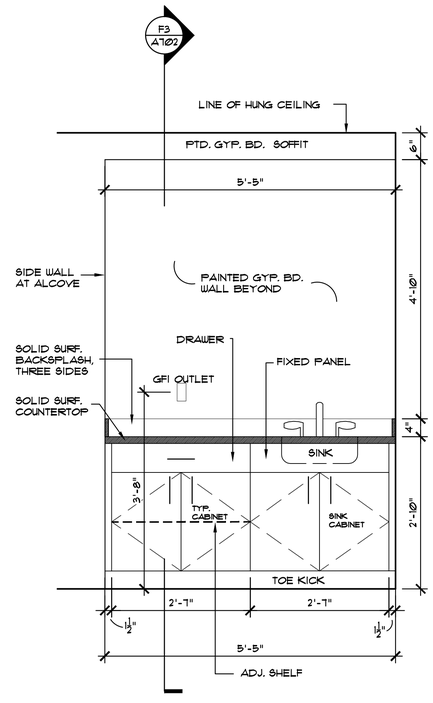


L5 MILLWORK ELEVATION
3/4" CONFERENCE ROOM

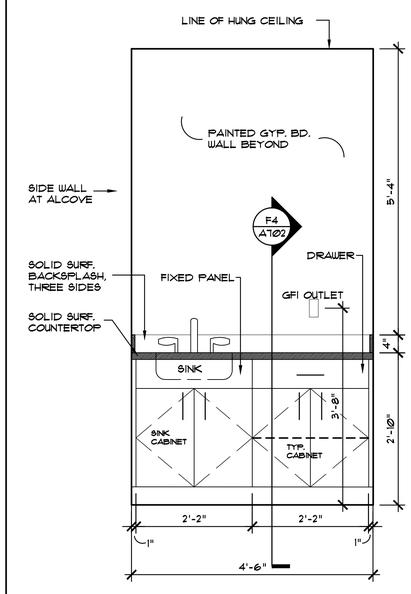


L7 MILLWORK ELEVATION
3/4" CUSTOMER WAITING AREA

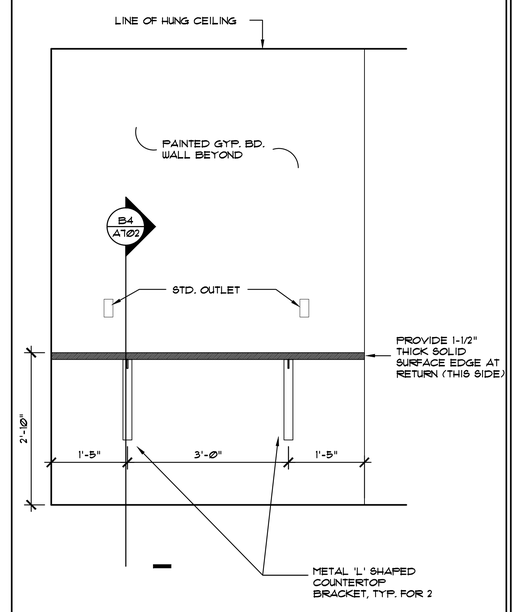


L9 MILLWORK ELEVATION
3/4" CUSTOMER SERVICE WORK AREA

**DESIGN DEVELOPMENT**
**NOT FOR CONSTRUCTION**


BENTON CONSTRUCTION, LLC
3000 ORANGE GROVE, CHRISTIANSTED
ST. CROIX, U.S. VIRGIN ISLANDS 00820
PHONE: (340) 718-7223 FAX: (340) 718-4719
WEBSITE: WWW.BCVI.COM

ARCHITECT
SILVERBERG ASSOCIATES VI, P.C.
ARCHITECTS
55 COMPANY STREET, SUITE B, CHRISTIANSTED
ST. CROIX, USVI 00820
NJ PHONE: (609) 921-1867 NJ FAX: (609) 921-8326

MEP ENGINEER
T.J.D. ENGINEERING ASSOCIATES, INC.
2 Hancock Drive, West Milford, N.J. 07480
Certificate of Authorization 24GA27944000
Phone 973-208-0054
Fax 973-208-0851

STRUCTURAL ENGINEER
HARRISON HAMNETT, P.C.
40 Knowles Street
Pennington, New Jersey 08534
Office (609) 818-1808
Fax (609) 818-1809


OWNER
Tropical SHIPPING

PROFESSIONAL SEAL:

THIS DRAWING SHALL NOT BE USED FOR CONSTRUCTION UNLESS A PROFESSIONAL'S SEAL AND SIGNATURE ARE ON THE DRAWING

PROJECT TITLE / DESCRIPTION:
TROPICAL SHIPPING NEW OFFICES

FACILITY LOCATION:
TROPICAL SHIPPING L.L.C. (LEASED PLOT)
PLOT NO. 8
EAST HOPE (H.O.V.I.C. LANDS)
QUEEN'S QUARTER, ST. CROIX USVI

DATE: 5-28-24

| NO: | REVISION: | DATE: |
|---|---|---|
| | | |

PROJECT NUMBER: 22254

DRAWING TITLE: CUST. SERVICE MILLWORK

SHEET NUMBER: A702

SHEET OF

## DOOR SCHEDULE

| | NUMBER | SIZE | RATED | CONSTRUCTION | MARK | FINISH | REMARKS | HDWE. |
|---|---|---|---|---|---|---|---|---|
| EXTERIOR | 1 | 3'-0" x 7'-0" | - | ALUMINUM + GLASS | EXT-1 | ANODIZED | FULL GLASS | F |
| EXTERIOR | 2 | 3'-0" x 7'-0" | - | ALUMINUM + GLASS | EXT-1 | ANODIZED | FULL GLASS | F |
| INTERIOR | 3 | 3'-0" x 7'-0" | - | WOOD | INT-1 | STAIN | | A |
| INTERIOR | 4 | 3'-0" x 7'-0" | - | WOOD | INT-3 | STAIN | 100 SQ. IN. VISION PANEL | D |
| INTERIOR | 5 | 3'-0" x 7'-0" | - | WOOD | INT-3 | STAIN | 100 SQ. IN. VISION PANEL | D |
| INTERIOR | 6 | 3'-0" x 7'-0" | - | WOOD | INT-1 | STAIN | WITH SIDELITE, SEE ELEVATIONS | C |
| INTERIOR | 7 | 3'-0" x 7'-0" | - | WOOD | INT-1 | STAIN | WITH SIDELITE, SEE ELEVATIONS | C |
| INTERIOR | 8 | 3'-0" x 7'-0" | - | WOOD | INT-1 | STAIN | | B |
| INTERIOR | 9 | 3'-0" x 7'-0" | - | WOOD | INT-2 | STAIN | FULL GLASS LITE | C |
| INTERIOR | 10 | 3'-0" x 7'-0" | - | WOOD | INT-1 | STAIN | WITH SIDELITE, SEE ELEVATIONS | C |
| INTERIOR | 11 | 3'-0" x 7'-0" | - | WOOD | INT-1 | STAIN | WITH SIDELITE, SEE ELEVATIONS | C |
| INTERIOR | 12 | 3'-0" x 7'-0" | - | WOOD | INT-1 | STAIN | WITH SIDELITE, SEE ELEVATIONS | C |
| INTERIOR | 13 | 3'-0" x 7'-0" | - | WOOD | INT-1 | STAIN | WITH SIDELITE, SEE ELEVATIONS | C |
| INTERIOR | 14 | 3'-0" x 7'-0" | - | WOOD | INT-1 | STAIN | | A |
| INTERIOR | 15 | 3'-0" x 7'-0" | - | WOOD | INT-1 | STAIN | | A |
| INTERIOR | 16 | 3'-0" x 7'-0" | - | WOOD | INT-1 | STAIN | | A |
| INTERIOR | 17 | 3'-0" x 7'-0" | - | WOOD | INT-2 | STAIN | FULL GLASS LITE | C |
| INTERIOR | 18 | 3'-0" x 7'-0" | - | WOOD | INT-1 | STAIN | | B |
| INTERIOR | 19 | 2'-8" x 7'-0" | - | WOOD | INT-1 | STAIN | | B |
| INTERIOR | 20 | 3'-0" x 7'-0" | - | WOOD | INT-1 | STAIN | | B |
| INTERIOR | 21 | 2'-0" x 7'-0" | - | WOOD | INT-1 | STAIN | | E |

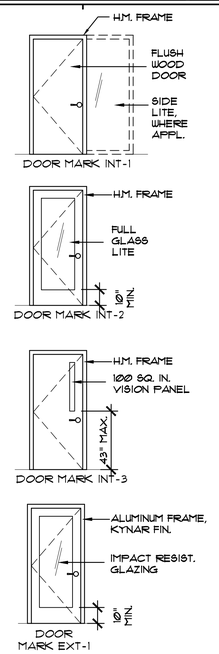


## ROOM MATERIAL CODE

| MARK | FLOOR (1ST DIGIT) | MARK | WALLS (2ND DIGIT) | MARK | CEILING (3RD DIGIT) | MARK | BASE (4TH DIGIT) |
|---|---|---|---|---|---|---|---|
| 1 | SEALED CONCRETE | A | EXTERIOR CEMENT STUCCO | 1 | EXTERIOR SOFFIT, PAINTED | A | |
| 2 | CERAMIC TILE | B | PAINTED GYP. BD. AND/OR PLASTER | 2 | SUSPENDED ACOUSTIC TILE & GRID | B | COMPOSITE BOARD BASE, PAINTED |
| 3 | LUXURY VINYL TILE | C | CERAMIC TILE WAINSCOT, PAINTED GYP. BD. ABOVE | 3 | GYPSUM BOARD NEW PAINT FINISH | C | CERAMIC TILE BASE |
| 4 | | D | CERAMIC TILE, FULL HEIGHT | 4 | NONE | D | |
| | | | | | | | |
| | | | | | | | |

NOTES:
1.) ALL FINISHES ARE ASSUMED NEW UNLESS NOTED OTHERWISE.
2.) ALL FLOOR FINISHES SHALL BE SLIP RESISTANT AND NOT LESS THAN CLASS II AS PER NFPA 253 (CRITICAL RADIANT FLUX > 0.22 WATTS/SQ. CM.)
3.) ALL WALL & CEILING FINISHES SHALL BE MIN. CLASS C AS PER ASTM E-84 (FLAME SPREAD INDEX 76-200, SMOKE DEVELOPMENT INDEX 0-450)

D6 ROOM FINISH SCHEDULE

**DESIGN DEVELOPMENT NOT FOR CONSTRUCTION**

## HARDWARE SCHEDULE

| MARK | DESCRIPTION |
|---|---|
| A | PRIVACY LOCKSET, LEVER HANDLE, STAINLESS STEEL B.B. HINGES |
| B | STOREROOM LOCKSET, LEVER HANDLE, STAINLESS STEEL B.B. HINGES |
| C | CLASSROOM LOCKSET, LEVER HANDLE, STAINLESS STEEL B.B. HINGES |
| D | CLASSROOM LOCKSET, LEVER HANDLE, STAINLESS STEEL B.B. HINGES, DOOR CLOSER |
| E | FIXED LEVER HANDLE WITH DEAD BOLT, STAINLESS STEEL B.B. HINGES |
| F | EXTERIOR GRADE PASSAGE LATCHSET WITH LEVER HANDLE & DEAD BOLT, STAINLESS STEEL B.B. HINGES |

DOOR FRAME & HARDWARE NOTES:
1.) PROVIDE WEATHER-STRIPPING, SWEEP AND THRESHOLD AT ALL EXTERIOR DOORS
2.) PROVIDE DOOR STOPS @ ALL DOORS, EXCEPT BI-FOLDING DOORS.

H1 DOOR & HARDWARE SCHEDULES

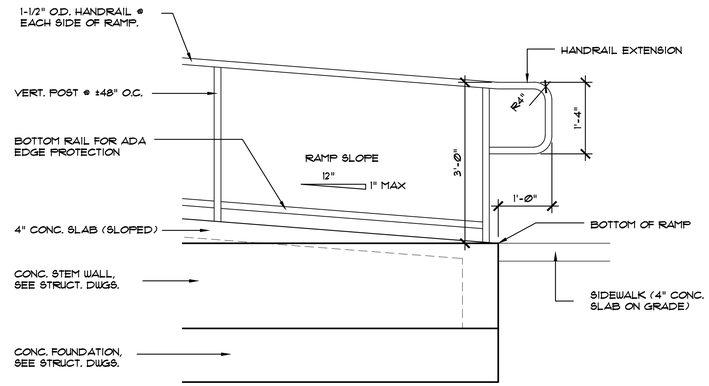


G6 RAMP & RAILING - PARTIAL ELEVATION
3/4"

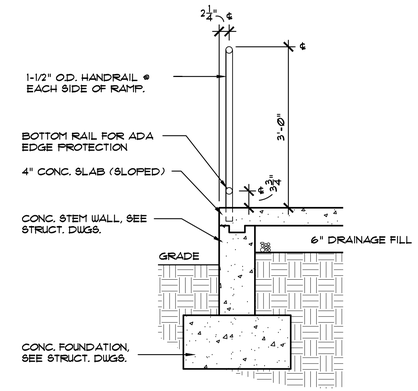


G9 RAMP/RAILING SECT.
3/4"

## WINDOW SCHEDULE

| MARK | ROUGH OPENING | TYPE | FRAME TYPE | SILL HEIGHT | HEAD HEIGHT | OPERATION | REMARKS |
|---|---|---|---|---|---|---|---|
| A | 3'-0" W. x 3'-0" H. | #1 | ALUMINUM | 3'-6" | 6'-6" | AWNING | LOW-E, IMPACT RESISTANT GLAZING |
| B | 1'-6" W. x 1'-6" H. | #1 | ALUMINUM | 5'-0" | 6'-6" | AWNING | LOW-E, IMPACT RESISTANT GLAZING |
| C | 5'-0" W. x 5'-0" H. | #2 | ALUMINUM | 1'-6" | 6'-6" | FIXED | LOW-E, IMPACT RESISTANT GLAZING TRUE DIVIDED LITE (2x2) |
| | | | | | | | |

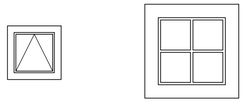


L1 WINDOW SCHEDULE

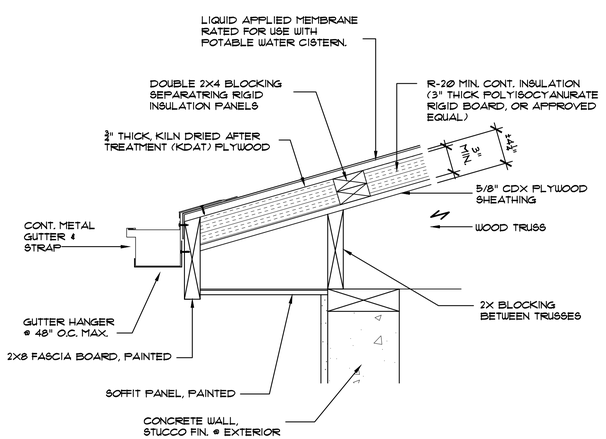


L5 TYPICAL ROOF & EAVE DETAIL
N.T.S.

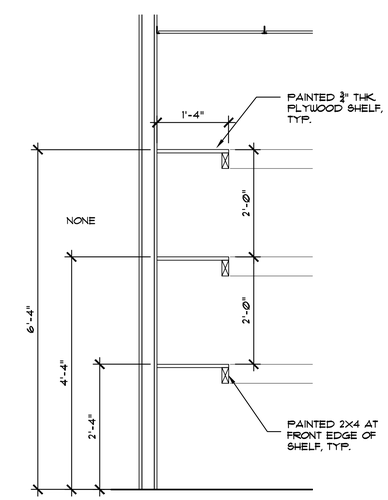


L9 SECT. - PLYWD. SHELF
1/2"


BENTON CONSTRUCTION, LLC
3000 ORANGE GROVE, CHRISTIANSTED
ST. CROIX, U.S. VIRGIN ISLANDS 00820
PHONE: (340) 718-7222 FAX: (340) 718-4779
WEBSITE: WWW.BCVI.COM

ARCHITECT
SILVERBERG ASSOCIATES VI, P.C.
ARCHITECTS
55 COMPANY STREET, SUITE B, CHRISTIANSTED
ST. CROIX, USVI 00820
NJ PHONE: (609) 921-1867 NJ FAX: (609) 921-8326

MEP ENGINEER
T.J.D. ENGINEERING ASSOCIATES, INC.
2 Hancock Drive, West Milford, N.J. 07480
Certificate of Authorization 24GA27944000
Phone 973-208-0054
Fax 973-208-0851

STRUCTURAL ENGINEER
HARRISON HAMNETT, P.C.
40 Knowles Street
Pennington, New Jersey 08534
Office (609) 818-1808
Fax (609) 818-1809


OWNER
Tropical SHIPPING

PROFESSIONAL SEAL:
THIS DRAWING SHALL NOT BE USED FOR CONSTRUCTION UNLESS A PROFESSIONAL'S SEAL AND SIGNATURE ARE ON THE DRAWING

PROJECT TITLE / DESCRIPTION:
TROPICAL SHIPPING NEW OFFICES

FACILITY LOCATION:
TROPICAL SHIPPING L.L.C.
(LEASED PLOT)
PLOT NO. 8
EAST HOPE (H.O.V.I.C. LANDS)
QUEEN'S QUARTER, ST. CROIX USVI

DATE: 5-28-24

| NO: | REVISION: | DATE: |
|---|---|---|
| | | |

PROJECT NUMBER: 22254

DRAWING TITLE: ARCH. SCHEDS & DETAILS

SHEET NUMBER: A801

SHEET OF

## 06100 - ROUGH CARPENTRY

1. WORK INCLUDES:
   A) MISCELLANEOUS BLOCKING, ETC. WHERE INDICATED ON DRAWINGS.
   B) BACKER BOARDS FOR M/E/P EQUIPMENT
   C) INSTALLATION OF FINISH HARDWARE

2. WOOD FOR ROUGH CARPENTRY BLOCKING SHALL BE SOUTHERN YELLOW PINE NO. 2 OR BETTER. WOOD FOR GROUNDS, BLOCKING, NAILERS, ETC WHEREVER IN CONTACT WITH MASONRY SHALL BE PRESSURE TREATED YELLOW PINE OR FIR.

3. LUMBER FOR ROUGH CARPENTRY SHALL BE AIR-SEASONED AND KILN DRIED TO A MOISTURE CONTENT OF NOT GREATER THAN 20 PERCENT BY DRY WEIGHT. LUMBER FOR FINISHED CARPENTRY SHALL BE AIR-SEASONED AND KILN DRIED FOR A MOISTURE CONTENT OF NOT GREATER THAN 12% BY DRY WEIGHT.

4. PLYWOOD SHEATHING & BLOCKING SHALL BE FIRE RESISTANCE TREATED PLYWOOD WITH PAINT GRADE VENEER, WHERE EXPOSED.

## 06400 - ARCHITECTURAL WOODWORK

1. WORK INCLUDES:
   A) SOLID SURFACE COUNTERTOPS & SUPPORTS
   B) BUILT-IN MILLWORK
   C) PLASTIC LAMINATE CABINETRY & WALL FINISHES

2. MATERIALS FOR CUSTOM CABINETRY SHALL BE PLYWOOD IN THICKNESS INDICATED ON THE DRAWINGS, FOR PLASTIC LAMINATE FINISH. PLYWOOD STANDARDS SHALL COMPLY WITH THE AMERICAN WOODWORK INSTITUTE STANDARDS FOR "CUSTOM" GRADE CABINETRY.

3. SOLID SURFACE COUNTERTOP MATERIALS SHALL BE AS INDICATED IN THE FINISH SCHEDULE. SOLID SURFACES SHALL BE FABRICATED BY A CONTRACTOR WITH A MINIMUM OF 5 YEARS EXPERIENCE IN SIMILAR PROJECTS. FABRICATION SHALL BE AS PER MANUFACTURER'S RECOMMENDATIONS.

4. PLASTIC LAMINATE SHALL BE HIGH PRESSURE LAMINATE BY FORMICA, WILSONART, ETC. SEE FINISH SCHEDULE FOR COLOR & FINISHES.

5. ALL WORK SHALL CONFORM TO AWI CUSTOM GRADE. CUT AND FIT ACCURATELY IN PLACE, TRUE, LEVEL, PLUMB, AND SQUARE, PERMANENTLY SECURED. WORK SHALL BE TIGHT, FREE OF SCRATCHES AND DENTS, AND FINISHED WITHOUT USE OF UNSIGHTLY FILERS OR PATCHES

6. THE CONTRACTOR SHALL PROVIDE ALL FASTENING DEVICES, INSTALLATION ACCESSORIES, ANCHORS, CLIPS, BOLTS, SURROUNDS, MOULDINGS, CLOSURES, FILLERS, TRIM AND ALL SIMILAR ITEMS REQUIRED FOR A COMPLETE INSTALLATION. COUNTERTOP SUPPORTS SHALL BE 'RAKKS' COUNTERTOP SUPPORT BRACKET (EH SERIES), FINISH FROM STOCK COLORS (MILL ALUM, ALL ANODIZED COLORS & ALL POWDER COAT COLORS), SIZE TO BE COORDINATED WITH COUNTERTOP DEPTH.

7. SHOP DRAWINGS & MATERIAL SAMPLES SHALL BE PROVIDED TO THE ARCHITECT FOR APPROVAL PRIOR TO THE START OF CONSTRUCTION OF ANY MILLWORK ITEMS.

## 07200 - THERMAL INSULATION

1. INTERIOR BATT INSULATION SHALL BE UNFACED MINERAL WOOL BATT INSULATION. THICKNESS AS INDICATED ON DRAWINGS & WIDTH TO MATCH STUD SPACING.

2. INTERIOR RIGID BOARD INSULATION SHALL BE OWENS CORNING 'FOAMULAR' EXTRUDED POLYSTYRENE (XPS) RIGID FOAM INSULATION OR APPROVED EQUAL. THICKNESS AS INDICATED ON DRAWINGS.

3. INSULATION ABOVE SHEATHING SHALL BE POLYISOCYANURATE RIGID BOARD INSULATION (3" THICK) OR R-20 MIN.

## 07500 - LIQUID APPLIED MEMBRANE ROOFING

1. LIQUID APPLIED ROOF MEMBRANE SHALL BE

2. PROVIDE CONTINUOUS GUTTER AT ALL SIDES OF BUILDING WITH DOWNSPOUTS LOCATED AS INDICATED. DOWNSPOUTS SHALL BE TIED INTO CISTERN.

## 08100 - WOOD DOORS & HOLLOW METAL FRAMES

1. THE CONTRACTOR SHALL FURNISH & INSTALL ALL WOOD DOORS & HOLLOW METAL FRAMES AND RELATED WORK AS REQ'D ON THE DRAWINGS & SPEC'D HEREIN.

2. CONTRACTOR IS RESPONSIBLE FOR ALL INSTALLATION MEANS & METHODS.

3. THE CONTRACTOR SHALL VERIFY THAT ALL DOORS AND HARDWARE ARE FUNCTIONING CORRECTLY PRIOR TO FINAL COMPLETION.

4. WOOD DOORS SHALL BE FLUSH TYPE, 1-3/4" THICK WITH STAIN GRADE VENEER (MAPLE). PROVIDE SOLID BANDING AT PERIMETER TO MATCH VENEER. PROVIDE SOLID BLOCKING AT HARDWARE INSTALLATION LOCATIONS.

5. HOLLOW METAL FRAMES SHALL BE A COMBINATION OF PROFILES, WITH INTEGRAL TRIM CONSTRUCTED OF 16 GA. STEEL, FOR OPENINGS UP TO 6'-4" WIDE AND 14 GA. STEEL FOR ALL WIDER OPENINGS. ALL FRAMES SHALL BE WELDED, PROVIDE APPROVED REINFORCING IN THE HEADS OF ALL FRAMES AS REQUIRED FOR RIGIDITY.

6. PROVIDE HOLLOW METAL BORROWED LITE FRAMES AS SHOWN ON DRAWINGS. PROVIDE TEMPERED GLAZING AND METAL GLAZING STOPS AS REQ'D.

7. DOORS SHALL BE INSTALLED TO OPERATE FREELY WITH PROPER CLEARANCES, AND WITHOUT BINDING. SEE FINISH HARDWARE SPECIFICATION SECTION FOR ADDITIONAL INFORMATION

## 08400 - ALUMINUM ENTRY DOORS & EXTERIOR WINDOWS

1. ALUMINUM ENTRY DOORS AND EXTERIOR WINDOWS SHALL BE MANUFACTURERED BY CGI WINDOWS & DOORS AND CGI COMMERCIAL - DIFFERENT PRODUCT LINES FROM PGT INNOVATION BRANDS.

1. WINDOWS AND DOORS SHALL BE AS FOLLOWS:
   FIXED WINDOWS - CGI SENTINEL SERIES 'FIXED LITE PICTURE WINDOW' #1320
   AWNING WINDOWS - CGI SENTINEL SERIES 'PROJECT OUT/AWNING WINDOW' #2388N
   ENTRY DOORS - CGI COMMERCIAL 'IMPACT STOREFRONT DOOR' #CGIC 3550

3. ALL WINDOWS AND DOOR SHALL BE RATED FOR HIGH VELOCITY HURRICANE ZONE, LARGE MISSILE IMPACT. INSTALLATION SHALL BE AS PER MANUFACTURER'S RECOMMENDATIONS, INCLUDING ANCHOR SPACING AND LOCATIONS FROM THE RELEVANT MIAMI-DADE NOTICE OF APPROVAL OR FLORIDA PRODUCT APPROVAL DOCUMENT.

4. ALL DOORS SHALL MEET THE REQUIREMENTS OF THE AMERICANS WITH DISABILITY ACT (ADA) INCLUDING HARDWARE, REQUIRED HEIGHT OF THE DOOR BOTTOM AND THE REQUIREMENTS AT THE THRESHOLD.

5. ALL GLAZING SHALL INCLUDE STRUCTURAL INTERLAYER FOR HIGH VELOCITY HURRICANE ZONE IMPACT RESISTANCE (LARGE MISSILE). GLAZING SHALL BE INSULATED GLAZING UNITS AND SHALL BE BUILT UP AS FOLLOWS (CONFIRM WITH MANUFACTURER):

   1/4" THK. TINTED GLASS (COLOR TO BE SELECTED FROM STANDARD OPTIONS)
   7/16" AIR SPACE
   1/4" CLEAR, HEAT STRENGTHENED GLASS
   .090" SENTRYGLAS BY KURRAY (FORMERLY KNOWN AS 'SGP' BY DUPONT)
   1/4" CLEAR, HEAT STRENGTHENED GLASS

6. THE CONTRACTOR IS RESPONSIBLE FOR ALL INSTALLATION MEANS AND METHODS. STOREFRONT SHALL BE INSTALLED, PLUMB & LEVEL.

7. THE CONTRACTOR SHALL COORDINATE WITH THE MANUFACTURER'S REPRESENTATIVE TO HAVE AN ONSITE MEETING AT THE START OF THE WINDOW/DOOR INSTALLATION SO THAT THE MANUF. REP. MAY OBSERVE THE CONTRACTORS WORK AND MAKE RECOMMENDATIONS AS REQUIRED.

8. CONTRACTOR SHALL PROVIDE SHOP DRAWINGS FOR ARCHITECT'S REVIEW AND APPROVAL PRIOR TO FABRICATION.

## 08100 - FINISH HARDWARE

1. FURNISH AND INSTALL ALL FINISH HARDWARE AND RELATED WORK AS INDICATED ON THE DRAWINGS AND AS SPECIFIED HEREIN.

2. KEYING: COORDINATE WITH OWNER FOR ALL KEYING REQUIREMENTS.

3. CONTRACTOR TO VERIFY ALL HARDWARE MEETS ADA REQMTS. AND TO SUBMIT HARDWARE SCHED. & CUT SHEETS OF ALL ITEMS TO ARCHITECT PRIOR TO ORDERING.

4. MANUFACTURERS & CATALOG NUMBERS (SUGGESTED MANUFACTURERS BELOW - OR APPROVED EQUAL). (CONTRACTOR TO VERIFY ALL HARDWARE MATCHES BUILDING STANDARDS AND SUBMIT SCHEDULE & CUT SHEETS PRIOR TO ORDERING)

| | |
|---|---|
| HINGES: | HAGER BB1191 (STAINLESS STEEL) 4½ x 4½ US32D |
| LOCKSETS: | SCHLAGE AL SERIES CYLINDER LOCKSET WITH LEVER HANDLE (SEE SCHEDULE FOR FUNCTIONS) |
| CLOSERS: | LCN 4041 ALUM. |
| DOOR STOPS: | FLOOR: IVES FS436 OR FS438<br>WALL: IVES WS406 OR WS407 |
| GASKETING: | ASSA ABLOY - PEMKO '888W', SILICONSEAL ADHESIVE BACKED, WHITE |
| KICK PLATES: | HAGER 1908-US32D, STAINLESS STEEL, 34" W. x 34" H. |

## 08800 - GLAZING

1. ALL GLAZING IN EXTERIOR DOORS & WINDOWS SHALL BE INSULATED GLAZING UNITS INCLUDING A STRUCTURAL INTERLAYER FOR HIGH VELOCITY HURRICANE ZONE IMPACT RESISTANCE (LARGE MISSILE). GLAZING FOR WINDOWS SHALL BE 1-5/16" IGU. GLAZING FOR DOORS MAY BE REDUCED THICKNESS (1" IGU). INSULATED GLAZING UNITS SHALL BE BUILT UP AS FOLLOWS:

   (EXTERIOR)
   1/4" THK. SOLARBAN 70XL (2) CLEAR
   1/2" AIR SPACE (ARGON FILLED)
   1/4" CLEAR, HEAT STRENGTHENED GLASS
   .090" SENTRYGLAS BY KURRAY (FORMERLY KNOWN AS 'SGP' BY DUPONT)
   1/4" CLEAR, HEAT STRENGTHENED GLASS
   (INTERIOR)

2. INSULATED GLAZING UNITS SHALL MEET ENERGY CONSERVATION CODE REQUIREMENTS. MAXIMUM U-VALUE SHALL BE 0.25 AND MINIMUM SOLAR HEAT GAIN COEFFICIENT SHALL BE 0.4

3. GLAZING AT INTERIOR DOORS WITH VISION PANELS SHALL BE 1/4" THK. LAMINATED SAFETY GLASS (CLEAR)

## 09260 - DRYWALL AND STUDS

1. CONTRACTOR SHALL PROVIDE ALL STEEL DRYWALL STUDS & SUSPENDED DRYWALL SUPPORT SYSTEMS FOR ASSEMBLIES AS INDICATED ON THE PLAN. STEEL DRYWALL STUDS TO BE MINIMUM 25 GAGE. SEE WALL TYPE DESCRIPTIONS & CEILING SOFFIT DETAILS FOR ADDITIONAL INFORMATION.

2. ALL DYRWALL PARTITIONS SHALL BE ERECTED PLUMB & STRAIGHT AND SECURED TO THE CONCRETE SLAB BELOW AND TO THE STRUCTURE ABOVE. CONTRACTOR SHALL PROVIDE CUTOUTS FOR ALL ELECTRICAL BOXES, DEVICES, ETC. AS REQ'D.

3. DYRWALL SUSPENSION SYSTEM SHALL BE USG DRYWALL SUSPENSION SYSTEM OR EQUAL. PROVIDE ALL REQUIRED SYSTEM COMPONENTS, INCLUDING HANGERS, MAIN TEES, CROSS TEES, MOLDINGS, CLIPS, ETC. FOR A COMPLETE INSTALLATION.

4. STANDARD GYPSUM WALLBOARD SHALL BE OF THE THICKNESS INDICATED, 48" WIDE USG "SHEETROCK BRAND, MOLD TOUGH FIRECODE CORE (TYPE X) GYPSUM PANELS" WITH STANDARD TAPERED EDGES OR EQUAL

5. GYPSUM PANELS FOR CEILINGS AND HORIZONTAL SOFFITS SHALL BE ½" THICK, 48" WIDE USG "SHEETROCK BRAND, MOLD TOUGH, REGULAR CORE GYPSUM PANELS" WITH STANDARD TAPERED EDGES OR EQUAL.

6. WALL PANELS FOR LOCATIONS WITH CERAMIC TILE FINISH SHALL BE 5/8" THK, 48" WIDE USG "DUROCK" CEMENT BOARD

7. PROVIDE A LEVEL 4 FINISH ON ALL WALLBOARD SURFACES PER ASTM C840.

## 09300 - CERAMIC TILE

1. THE CONTRACTOR SHALL FURNISH & INSTALL ALL CERAMIC TILE AND RELATED WORK AS REQ'D ON THE DRAWINGS AND SPECIFIED HEREIN.

   A) CERAMIC FLOOR TILE @ BASE @ RESTROOMS
   B) CERAMIC WALL TILE @ RESTROOMS

2. FLOOR TILE SHALL BE DALTILE 'KEYSTONE' COLORBODY', 2"x2" MOSAIC TILES. PROVIDE MATCHING COVE BASE

3. WALL TILE SHALL BE DALTILE 'SEMIGLOSS', 6"x6" GLAZED WALL TILE. PROVIDE BULLNOSE TILES @ TOP OF WAINSCOT.

4. PROVIDE MARBLE SADDLES AT ENTRANCE DOORS TO RESTROOMS

5. ALL TILE SHALL BE INSTALLED USING A WATER-CLEANABLE, THIN-SET, HIGH-STRENGTH EPOXY MORTAR AND NON-SAGGING GROUT (LATICRETE 'SPECTRALOCK PRO', MAPEI 'KERAPOXY' OR APPROVED EQUAL). COLOR BY INTERIOR DESIGNERS OR ARCHITECT

6. ALL FLOOR TILE SHALL BE INSTALLED LEVEL UNLESS NOTED OTHERWISE. PROVIDE FLOOR LEVELING AS REQUIRED.

7. ALL TILE SHALL BE NEATLY CUT AND FIT AT ITEMS INTERSECTING AND ABUTTING THE TILE SURFACES. THE EDGES OF CUT TILE SHALL BE GROUND SMOOTH.

8. ALL JOINTS BETWEEN TILE WORK AND PLUMBING FIXTURES SHALL BE RAKED AND CAULKED WITH AN ELASTIC CAULKING COMPOUND.

## 09500 - CEILING TILE & GRID

1. THE CONTRACTOR SHALL FURNISH & INSTALL ALL ACOUSTICAL CEILING TILE, SUSPENDED GRID AND RELATED WORK AS REQ'D ON THE DRAWINGS AND SPECIFIED HEREIN.

2. SUSPENDED GRID SHALL BE CERTAINTEED 15/16" 'CLASSIC STAB' EXPOSED GRID/TEE. ACOUSTIC TILE SHALL BE CERTAINTEED 'PERFORMA SYMPHONY m' SQUARE LAY-IN, 2'x2'x3/4" OR 2'x4'x3/4" TILES AS INDICATED.

3. GRID SHALL BE INSTALLED LEVEL & SQUARE. SEE REFLECTED CEILING PLAN FOR ALL ELEVATIONS.

4. PROVIDE WALL ANGLE WHERE CEILING INTERSECTS WITH WALLS.

5. PROVIDE CUT-OUTS FOR ALL ELECTRICAL & MECHANICAL CEILING FIXTURES.

## 09650 - RESILIENT FLOORING

1. THE CONTRACTOR SHALL FURNISH & INSTALL ALL RESILIENT FLOOR TILE, WALL BASE & TRANSITIONS AND RELATED WORK AS REQ'D ON THE DRAWINGS AND SPECIFIED HEREIN.

2. RESILIENT FLOOR TILE SHALL BE XX LUXURY VINYL TILE, OR APPROVED EQUAL.

3. VINYL WALL BASE SHALL BE 4" HIGH, COVE BASE BY ARMSTRONG, ROPPE OR EQUAL.

4. TRANSITION STRIPS SHALL BE OF APPROVED TYPE, WIDTH AND COLOR. COORDINATE WITH INTERIOR DESIGNERS WHERE REQUIRED.

5. ALL MATERIALS SHALL BE INSTALLED AS PER MANUFACTURER'S RECOMMENDATIONS. CONTRACTOR IS RESPONSIBLE FOR PROVIDING A SMOOTH FINISH AT EXISTING SLAB.

6. NO HEAVY TRAFFIC FOR A MIN. OF 72 HOURS AFTER INSTALLATION.

## 09900 - PAINTING

1. THE CONTRACTOR SHALL PROVIDE ALL PAINTING AND RELATED WORK AS SPECIFIED HEREIN AND AS REQUIRED BY THE DRAWINGS

   A. PAINTING OF THE EXPOSED FACE OF ALL WALL & CEILING SURFACES WHERE INDICATED ON DRAWINGS, INCLUDING SOFFITS, PARTITIONS AND OTHER WALL SURFACES. APPLY INTERIOR LATEX PAINT TO ALL INTERIOR EXPOSED GYP. BD. SURFACES, INTERIOR EXPOSED WOOD ROOF SURFACES & EXTERIOR EXPOSED ROOF SURFACES & FRAMING WITHIN THE AREA OF WORK AND AS REQUIRED BY THIS CONTRACT. ALL WALL FINISHES SHALL BE 'EGGSHELL' & ALL CEILING FINISHES 'FLAT', UNLESS DIRECTED OTHERWISE.

   B. PAINTING OF NEW DOORS & FRAMES, AS INDICATED. COLOR BY ARCHITECT / OWNER - FINISH SHALL BE SEMI-GLOSS UNLESS NOTED OTHERWISE

   C. PAINTING OF ALL EXPOSED EXTERIOR WOOD.

   D. TOUCHING UP ISOLATED ITEMS OR FEATURES OF THE WORK AFTER PAINTING AND FINISHING HAS BEEN COMPLETED WHERE SUCH SURFACES HAVE BEEN SUBSEQUENTLY MARRED OR DAMAGED BEFORE FINAL COMPLETION AND ACCEPTANCE OF ALL WORK UNDER THIS CONTRACT.

2. THE CONTRACTOR SHALL PROVIDE DROP CLOTHS AND TAKE MEASURES TO PROTECT ALL FINISHED SURFACES AND SHALL IMMEDIATELY REMOVE ALL SPATTER AND STAINS FROM SUCH SURFACES. ALL HARDWARE, TRIM FOR LIGHTING FIXTURES, SWITCH PLATES AND SIMILAR ITEMS SHALL BE REMOVED PRIOR TO PAINTING AND FINISHING, AND SUBSEQUENTLY REPLACED.

3. THE CONTRACTOR SHALL PROVIDE ALL SCAFFOLDING, PLANKS, HORSES AND EQUIPMENT REQUIRED FOR THE PROPER COMPLETION OF THE WORK.

4. THE CONTRACTOR SHALL OBTAIN THE OWNER'S APPROVAL OF ALL MATERIALS PROPOSED TO BE USED, AND SHALL PREPARE AND SUBMIT SAMPLES FOR APPROVAL AS REQUIRED BY THE OWNER. ALL PAINTS & FINISHES SHALL BE OF COLORS, LUSTERS & TEXTURES AS DIRECTED BY OWNER AND INDICATED HEREIN

5. MATERIALS SHALL BE BROUGHT TO THE BUILDING IN THEIR ORIGINAL UNOPENED CONTAINERS AND SHALL BE USED WITHOUT THINNING, UNLESS OTHERWISE APPROVED BY THE OWNER, AND ONLY THEN IN STRICT ACCORDANCE WITH THE MANUFACTURER'S DIRECTIONS.

6. MATERIALS FOR INTERIOR & EXTERIOR PAINTING SHALL BE PRODUCED BY THE FOLLOWING MANUFACTURERS OR APPROVED EQUAL: SHERWIN WILLIAMS, BENJAMIN MOORE, OLYMPIC. PROVIDE MANUFACTURER RECOMMENDED PRIMERS. APPLY ONE COAT OF PRIMER AND TWO FINISH COATS, MIN.

7. MATERIALS FOR EXTERIOR PAINTING @ HOLLOW METAL DOORS & FRAMES SHALL BE PRODUCED BY BENJAMIN MOORE (IRONCLAD RETARDO RUST INHIBITIVE PRIMER & MOORCRAFT LATEX SEMI-GLOSS ENAMEL) OR APPROVED EQUAL.

8. MATERIALS FOR EXTERIOR PAINTING @ EXPOSED WOOD SURFACES SHALL BE OLYMPIC 'ELITE SOLID COLOR ADVANCED STAIN + SEALANT IN ONE' (PRODUCT #00301), OR APPROVED EQUAL. COLOR SHALL BE BY ARCHITECT / OWNER. FOLLOW MANUFACTURER'S RECOMMENDATION FOR SURFACE PREPARATION.

## 10200: TOILET & SHOWER ACCESSORIES

1. ALL TOILET ACCESSORIES LISTED BELOW ARE BY BOBRICK, CLASSIC SERIES UNLESS NOTED OTHERWISE. SIMILAR ITEMS BY OTHER MANUFACTURER ACCEPTABLE WITH APPROVAL.

   GRAB BARS: 1½" O.D. STAINLESS STEEL GRAB BARS W/ SNAP FLANGE (BOBRICK SERIES B-6806) IN LENGTHS SHOWN ON PLAN

   TOILET PAPER DISPENSER: BOBRICK #B-2888, CLASSIC SERIES, SURFACE MOUNTED MULTI-ROLL TOILET PAPER DISPENSER, SATIN STAINLESS STEEL FIN.

   COMBINATION PAPER TOWEL DISPENSER/WASTE UNIT: BOBRICK #B-3944, CLASSIC SERIES RECESSED CONVERTIBLE PAPER TOWEL DISPENSER / WASTE RECEPTACLE.

   PAPER TOWEL DISPENSER: BOBRICK #B-359, RECESSED PAPER TOWEL DISPENSER - FOR C-FOLD OR MULTI-FOLD PAPER TOWELS.

   SOAP DISPENSER: BOBRICK #B-822, LAVATORY MOUNTED SOAP DISPENSER W/ 20 FL. OZ. UNDER-COUNTER CONTAINER & MANUAL PISTON PUMP.

   MIRROR: BOBRICK #B-165 SERIES CHANNEL-FRAME STAINLESS STEEL FRAMED MIRROR IN SIZE AS SHOWN ON ELEVATIONS

   TOILET SEAT COVER DISPENSER: BOBRICK #B-221, SURFACE MOUNTED TOILET SEAT COVER DISPENSER, SATIN STAINLESS STEEL FIN.

   SANITARY NAPKIN DISPOSAL: BOBRICK #B-254 CLASSIC SERIES SURFACE-MOUNTED SANITARY NAPKIN DISPOSAL WITH SATIN STAINLES STEEL FIN.

2. SHOWER COMPARTMENTS SHALL INCLUDE THE FOLLOWING ITEMS. (SEE PLUMBING SPECIFICATION FOR ADDITIONAL INFORMATION).

   SHOWER GRAB BARS: 1½" OD. STAINLESS STEEL GRAB BARS W/ SNAP FLANGE (BOBRICK SERIES B-6806). HORIZONTAL GRAB BAR SHALL BE B-6861 'HORIZONTAL TWO-WALL BAR FOR SHOWER STALL'. VERTICAL GRAB BAR SHALL BE 18" LONG.

   SHOWER SEAT: BOBRICK B-517 OR B-518 'WALL MOUNT, L-SHAPED, FOLD-DOWN SEAT', RIGHT OR LEFT HAND DEPENDING ON SHOWER CONFIGURATION.

   ROBE HOOK: BOBRICK #B-672, SURFACE MOUNTED DOUBLE ROBE HOOK.

   SHOWER CURTAIN ROD: BOBRICK 'B-207' HEAVY DUTY SHOWER CURTAIN ROD WITH CONCEALED MOUNTING. ADJUSTABLE LENGTH 36" - 72" LONG, STAINLESS STEEL.

   SHOWER CURTAIN: BOBRICK '204-2' VINYL SHOWER CURTAIN 42"x72" & '204-1' SHOWER CURTAIN HOOKS.

## 10700: SUN SHADING PRODUCTS

1. SUN SHADING APPLIED AT THE EXTERIOR OF THE BUILDING SHALL BE CSI 'AIRFOIL SUNSHADE SYSTEM' OR APPROVED EQUAL

2. SUN SHADES SHALL BE SECURED TO EXTERIOR WALL WITH CONCRETE ANCHORS. CONTRACTOR SHALL PROVIDE ENGINEERED SHOP DRAWINGS FOR REQUIRED ANCHORS TO MEET WIND LOADS.

**DESIGN DEVELOPMENT**
**NOT FOR CONSTRUCTION**


BENTON CONSTRUCTION, LLC
3000 ORANGE GROVE, CHRISTIANSTED
ST. CROIX, U.S. VIRGIN ISLANDS 00820
PHONE: (340) 718-1221 FAX: (340) 718-4779
WEBSITE: WWW.BCVI.COM

ARCHITECT
SILVERBERG ASSOCIATES VI, P.C.
ARCHITECTS
55 COMPANY STREET, SUITE B, CHRISTIANSTED
ST. CROIX, USVI 00820
NJ PHONE: (609) 921-1867 NJ FAX: (609) 921-8326

MEP ENGINEER
T.J.D. ENGINEERING ASSOCIATES, INC.
2 Hancock Drive, West Milford, N.J. 07480
Certificate of Authorization 24GA27944000
Phone 973-208-0054
Fax 973-208-0851

STRUCTURAL ENGINEER
HARRISON HAMNETT, P.C.
40 Knowles Street
Pennington, New Jersey 08534
Office (609) 818-1808
Fax (609) 818-1809

OWNER
Tropical SHIPPING


PROFESSIONAL SEAL:

THIS DRAWING SHALL NOT BE USED FOR CONSTRUCTION UNLESS A PROFESSIONAL'S SEAL AND SIGNATURE ARE ON THE DRAWING

PROJECT TITLE / DESCRIPTION:
TROPICAL SHIPPING NEW OFFICES

FACILITY LOCATION:
TROPICAL SHIPPING L.L.C. (LEASED PLOT)
PLOT NO. 8
EAST HOPE (H.O.V.I.C. LANDS)
QUEEN'S QUARTER, ST. CROIX USVI

DATE: 5-28-24

| NO: | REVISION: | DATE: |
|---|---|---|
| | | |

PROJECT NUMBER: 22254

DRAWING TITLE:
ARCHITECTURAL SPECIFICATIONS

SHEET NUMBER:
A802

SHEET OF

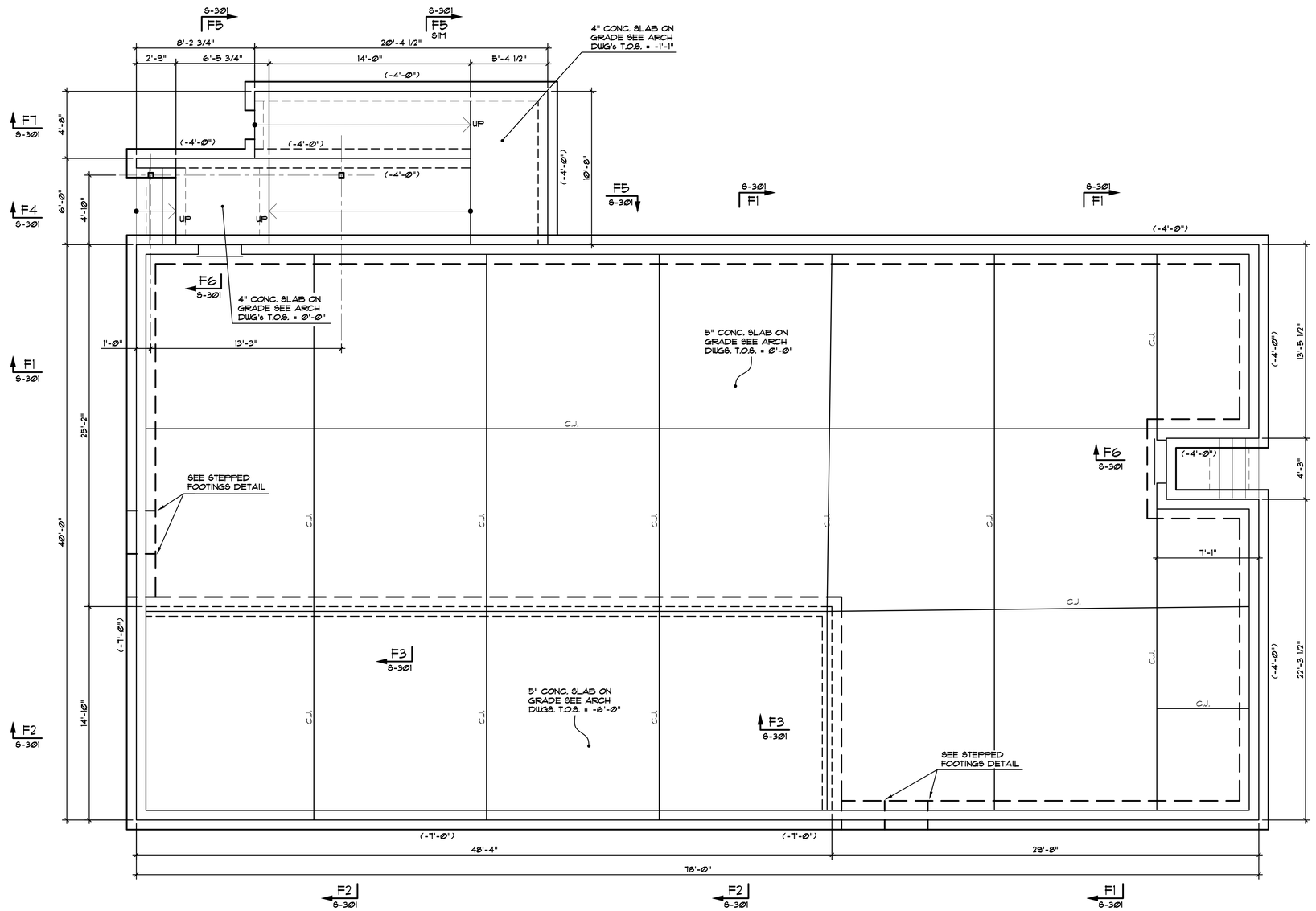


## FOUNDATION PLAN

1/4" = 1'-0"

ELEVATION TOP OF FINISHED FLOOR SLAB: 23.13' FROM DATUM EL. 0'-0" UNLESS OTHERWISE NOTED ON PLAN.
FLOOR SLAB: 5" CONC. SLAB + 6x6-W2.1xW2.1 W.W.F. ON A 15 MIL VAPOR BARRIER
OVER 5" MIN. DRAINAGE FILL UNLESS OTHERWISE NOTED.
ELEVATION BOTTOM OF FOOTINGS NOTED THUS ( ) ON PLAN BELOW FINISHED FLOOR DATUM EL. 0'-0".
C.J. - INDICATES SLAB CONSTRUCTION OR CONTROL JOINT.
SLAB DEPRESSIONS NOTED THUS [ ] ON PLAN FROM TOP OF FLOOR SLAB - SEE ARCH. DWGS. FOR LOCATION & EXTENT.
{ } - INDICATES BOTTOM OF BASE PLATE ABOVE OR BELOW DATUM.
ANY PENETRATIONS IN SLAB FROM ALL TRADES TO BE FILLED WITH POLYURETHANE CAULK.

NOTE:
1. STEP ALL FOOTINGS AT ALL PIPES & CONDUITS, SEE TYPICAL DETAIL.
2. G.C. TO CONFIRM ALL LOCATIONS AND INVERTS OF PIPES WITH MECHANICAL & ELECTRICAL CONTRACTORS.
3. THE FOUNDATION DRAWINGS SHOW ONLY GENERAL LOCATIONS AND MAY NOT INCLUDE ALL PENETRATIONS. G.C. TO SEE MECHANICAL DRAWINGS FOR FULL EXTENT OF PIPE PENETRATIONS.

NOTE:
GENERAL CONTRACTOR TO LAYOUT DIMENSIONS OF COLUMN CENTERLINES AT THE BEGINNING OF THE PROJECT AND IS TO NOTIFY THE ARCHITECT AND STEEL CONTRACTOR OF ANY DEVIATIONS FROM THE CONTRACT DRAWINGS. SEE S-1 FOR FOOTING AND PIER SCHEDULES.

NOTE:
ELECTRICAL CONTRACTOR TO PROVIDE GROUNDING ELECTRODE SYSTEM AS REQUIRED BY NEC SECTION 250-52.a. COORDINATE LOCATION WITH GENERAL CONTRACTOR.

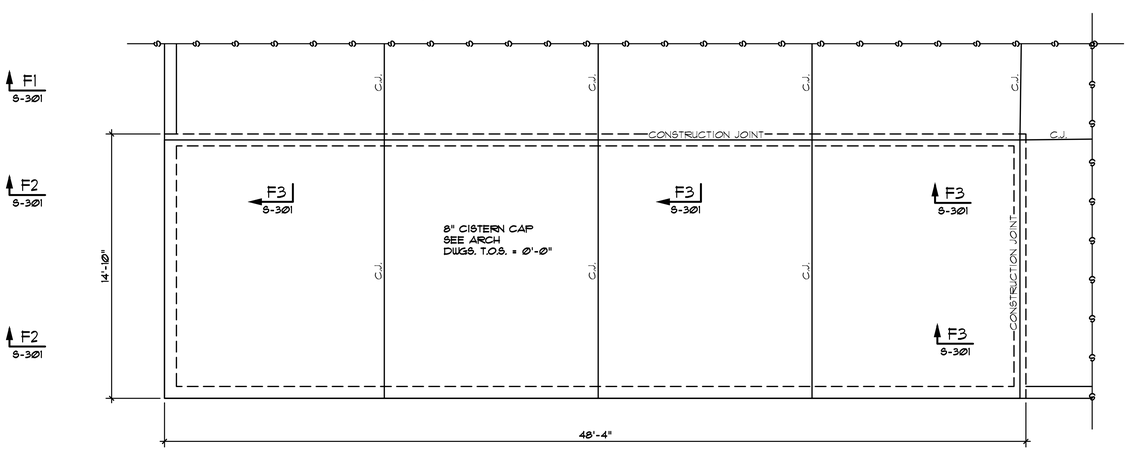


## CISTERN CAP PLAN

1/4" = 1'-0"

**DESIGN DEVELOPMENT**
**NOT FOR CONSTRUCTION**

JOHN N. HARRISON U.S.V.I. P.E. #0-19474-1B DATE


J. BENTON CONSTRUCTION, LLC
3000 ORANGE GROVE, CHRISTIANSTED
ST. CROIX, U.S. VIRGIN ISLANDS 00820
PHONE: (340) 718-7222 FAX: (340) 718-4779
WEBSITE: WWW.JBCVI.COM

ARCHITECT
SILVERBERG ASSOCIATES VI, P.C.
ARCHITECTS
59 COMPANY STREET, SUITE B, CHRISTIANSTED
ST. CROIX, USVI 00820
NJ PHONE: (609) 921-1861 NJ FAX: (609) 921-8326

MEP ENGINEER
T.J.D. ENGINEERING ASSOCIATES, INC.
2 Hancock Drive, West Milford, N.J. 07480
Certificate of Authorization 24GA27944000
Phone 973-208-0054
Fax 973-208-0851

STRUCTURAL ENGINEER
HARRISON HAMNETT, P.C.
40 Knowles Street
Pennington, New Jersey 08534
Office (609) 818-1808
Fax (609) 818-1809


OWNER
Tropical SHIPPING

PROFESSIONAL SEAL:
THIS DRAWING SHALL NOT BE USED FOR CONSTRUCTION UNLESS A PROFESSIONAL'S SEAL AND SIGNATURE ARE ON THE DRAWING

PROJECT TITLE / DESCRIPTION:
TROPICAL SHIPPING NEW OFFICES

FACILITY LOCATION:
TROPICAL SHIPPING L.L.C.
(LEASED PLOT)
PLOT NO. 8
EAST HOPE (H.O.V.I.C. LANDS)
QUEEN'S QUARTER, ST. CROIX USVI

DATE: 5-28-24

| NO: | REVISION: | DATE: |
|---|---|---|
| | | |

PROJECT NUMBER: 22254

DRAWING TITLE: FOUNDATION & CIST. CAP PLAN

SHEET NUMBER: S-101

SHEET OF


Drawing name: C:\Users\Metallic\AppData\Local\Temp\AcPublish_32972\Tropical Shipping.dwg
Date: May 23, 2024 - 5:22pm

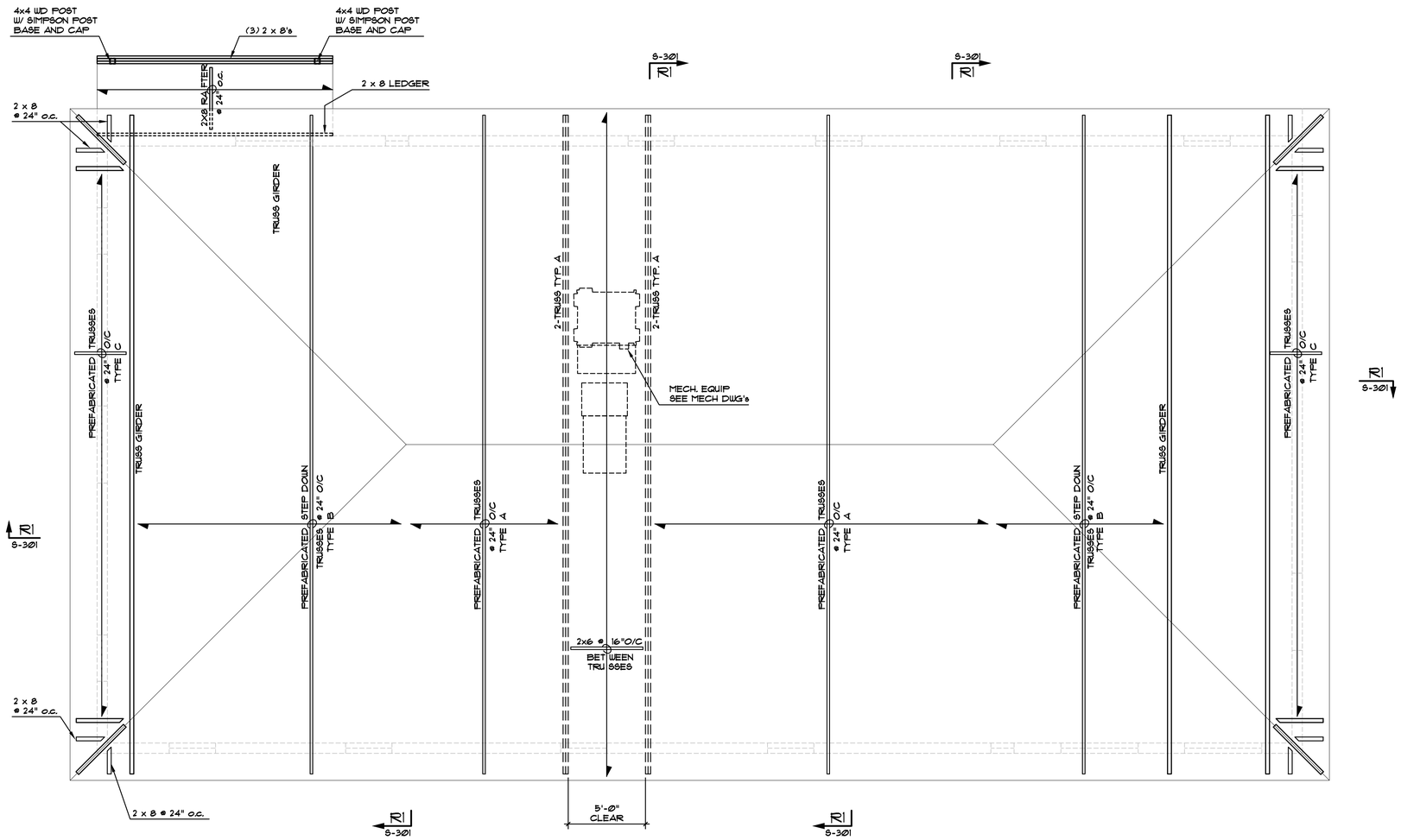


## ROOF FRAMING PLAN

1/4" = 1'-0"

ROOF SHEATHING: 3/4" APA RATED PLYWOOD.
COORDINATE SIZE & LOCATION OF ALL ROOF OPNGS. W/ ARCH. DWGS.
ALL CONVENTIONAL JOIST, RAFTERS AND HEADERS TO BE DOUGLAS FIR NO. 2 AND BETTER.
PROVIDE BEAM HANGERS CAPABLE OF DEVELOPING THE FULL END REACTION OF THE MEMBER AT THE BEAMS AND JOISTS FRAMING FLUSH FRAMED BEAMS.

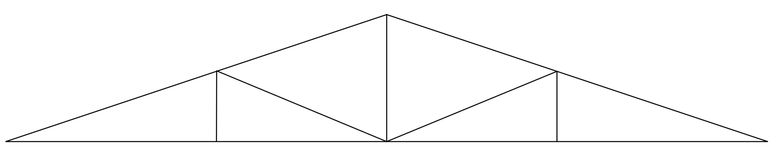

TYP. A

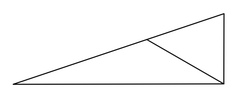

TYP. C

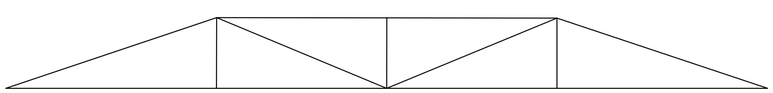

TYP. B

## TRUSS DIAGRAM

NOT TO SCALE

**DESIGN DEVELOPMENT**
**NOT FOR CONSTRUCTION**

JOHN N. HARRISON U.S.V.I. P.E. #0-19474-1B DATE


J. BENTON CONSTRUCTION, LLC
3000 ORANGE GROVE, CHRISTIANSTED
ST. CROIX, U.S. VIRGIN ISLANDS 00820
PHONE: (340) 718-7222 FAX: (340) 718-4779
WEBSITE: WWW.JBCVI.COM

ARCHITECT
SILVERBERG ASSOCIATES VI, P.C.
ARCHITECTS
59 COMPANY STREET, SUITE B, CHRISTIANSTED
ST. CROIX, USVI 00820
NJ PHONE: (609) 921-1867 NJ FAX: (609) 921-8326

MEP ENGINEER
T.J.D. ENGINEERING ASSOCIATES, INC.
2 Hancock Drive, West Milford, N.J. 07480
Certificate of Authorization 24GA27944000
Phone 973-208-0054
Fax 973-208-0851

STRUCTURAL ENGINEER
HARRISON HAMNETT, P.C.
40 Knowles Street
Pennington, New Jersey 08534
Office (609) 818-1808
Fax (609) 818-1809


OWNER
Tropical SHIPPING

PROFESSIONAL SEAL:

THIS DRAWING SHALL NOT BE USED FOR CONSTRUCTION UNLESS A PROFESSIONAL'S SEAL AND SIGNATURE ARE ON THE DRAWING

PROJECT TITLE / DESCRIPTION:
TROPICAL SHIPPING NEW OFFICES

FACILITY LOCATION:
TROPICAL SHIPPING L.L.C.
(LEASED PLOT)
PLOT NO. 8
EAST HOPE (H.O.V.I.C. LANDS)
QUEEN'S QUARTER, ST. CROIX USVI

DATE: 5-28-24

| NO: | REVISION: | DATE: |
|---|---|---|
| | | |

PROJECT NUMBER: 22254

DRAWING TITLE: ROOF FRAMING PLAN

SHEET NUMBER: S-201

SHEET OF


Drawing name: C:\Users\Metallic\AppData\Local\Temp\AcPublish_32972\Tropical Shipping.dwg
Date: May 23, 2024 - 5:22pm

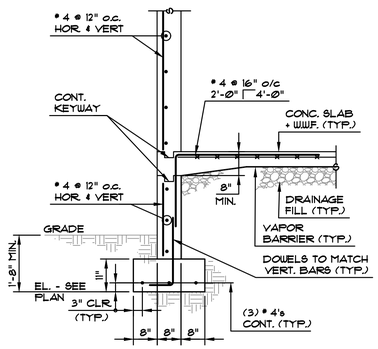


SECTION - F1
1/2"=1'-Ø"

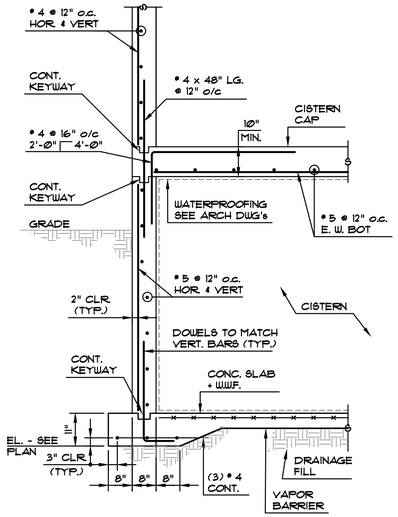


SECTION - F2
1/2"=1'-Ø"

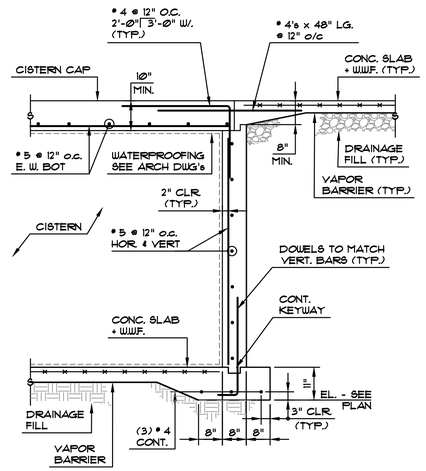


SECTION - F3
1/2"=1'-Ø" 1/2"=1'-Ø"

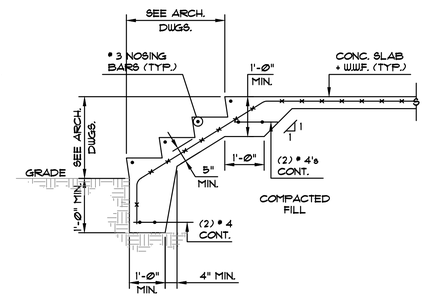


SECTION - F4
1/2"=1'-Ø"

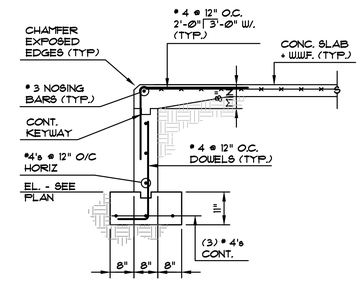


SECTION - F5
1/2"=1'-Ø"

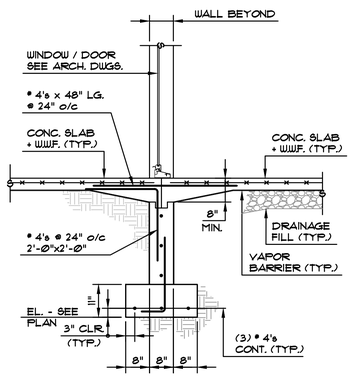


SECTION - F6
1/2"=1'-Ø"

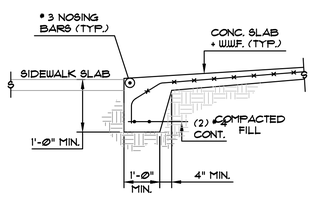


SECTION - F7
1/2"=1'-Ø"

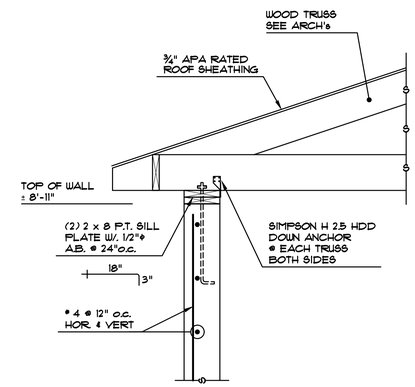


SECTION - R1
3/4"=1'-Ø"

**DESIGN DEVELOPMENT**
**NOT FOR CONSTRUCTION**

JOHN N. HARRISON U.S.V.I. P.E. #0-19474-1B DATE


J. BENTON CONSTRUCTION, LLC
3000 ORANGE GROVE, CHRISTIANSTED
ST. CROIX, U.S. VIRGIN ISLANDS 00820
PHONE: (340) 718-7222 FAX: (340) 718-4779
WEBSITE: WWW.JBCVI.COM

ARCHITECT
SILVERBERG ASSOCIATES VI, P.C.
ARCHITECTS
59 COMPANY STREET, SUITE B, CHRISTIANSTED
ST. CROIX, USVI 00820
NJ PHONE: (609) 921-8861 NJ FAX: (609) 921-8326

MEP ENGINEER
T.J.D. ENGINEERING ASSOCIATES, INC.
2 Hancock Drive, West Milford, N.J. 07480
Certificate of Authorization 24GA27944000
Phone 973-208-0054
Fax 973-208-0851

STRUCTURAL ENGINEER
HARRISON HAMNETT, P.C.
40 Knowles Street
Pennington, New Jersey 08534
Office (609) 818-1808
Fax (609) 818-1809


OWNER
Tropical SHIPPING

PROFESSIONAL SEAL:
THIS DRAWING SHALL NOT BE USED FOR CONSTRUCTION UNLESS A PROFESSIONAL'S SEAL AND SIGNATURE ARE ON THE DRAWING

PROJECT TITLE / DESCRIPTION:
TROPICAL SHIPPING NEW OFFICES

FACILITY LOCATION:
TROPICAL SHIPPING L.L.C.
(LEASED PLOT)
PLOT NO. 8
EAST HOPE (H.O.V.I.C. LANDS)
QUEEN'S QUARTER, ST. CROIX USVI

DATE: 5-28-24

| NO: | REVISION: | DATE: |
|---|---|---|
| | | |

PROJECT NUMBER: 22254

DRAWING TITLE: SECTIONS

SHEET NUMBER: S-301

SHEET OF


Drawing name: C:\Users\Metallic\AppData\Local\Temp\AcPublish_32972\Tropical Shipping.dwg
Date: May 23, 2024 - 5:22pm

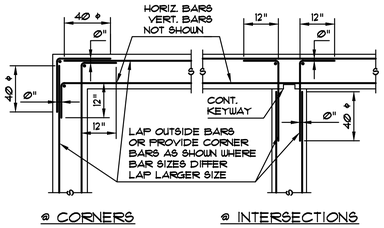


## HORIZ. REINF. IN CONC. WALLS

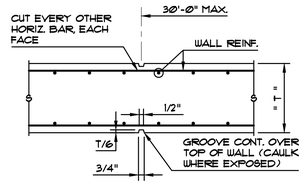


## TYPICAL CONCRETE WALL CONTROL JOINT

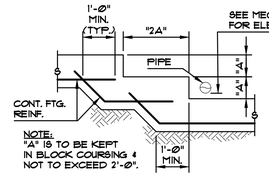


## TYPICAL STEPPED FOOTING

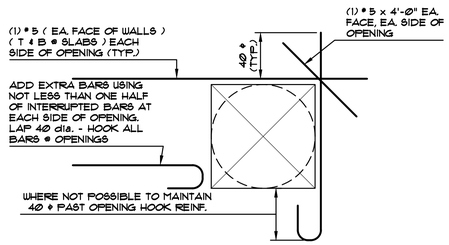


## TYPICAL REINFORCING @ OPENINGS IN CONCRETE WALLS & SLABS

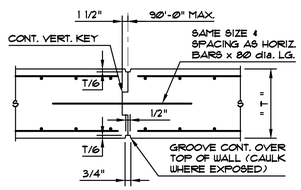


## TYPICAL CONCRETE WALL CONSTRUCTION JOINT

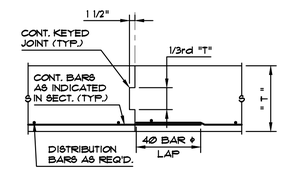


## TYPICAL CONCRETE FOOTING CONSTRUCTION JOINT

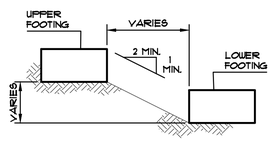


## TYPICAL SLOPE BETWEEN FOOTINGS

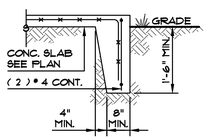


@ EXTERIOR PLATFORM

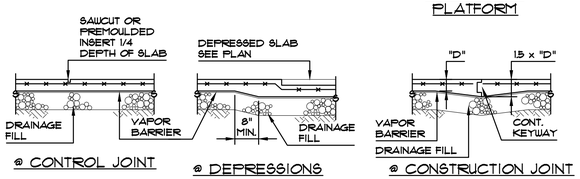


## TYPICAL SLAB ON GRADE DETAILS

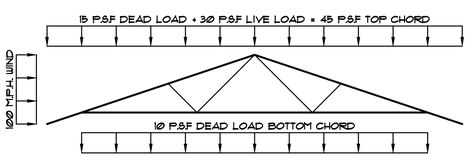


## PREFAB. TRUSS LOADING DIAGRAM

GENERAL NOTES

FOUNDATION

1. All footings shall bear on soil having a minimum safe bearing capacity of 1.5 tons per square foot.
2. Elevations given correspond to the computed bottom of footings and are minimum depths which are not to be construed as limiting in any way the depth required to reach good bearing.
3. No footings shall be placed in water.
4. Fill and backfill material shall be free of deleterious organic matter.
5. All footing excavations are to be finished by hand.
6. Fill and backfill shall be clean bank run material conforming to the following graduation: 100% smaller than 4 inch sieve; maximum 15% smaller than #200 sieve, and approved as acceptable by a testing laboratory.
7. No fill or backfill shall be placed over or against work at such time or in such a manner which would endanger the stability or otherwise damage such work.

CAST-IN-PLACE CONCRETE

1. All concrete work shall conform to the latest edition of the ACI Building Code.
2. All concrete, except slabs on grade, shall attain 3000 PSI compressive strength at 28 days. All concrete for slabs and structural slabs shall attain 4000 PSI compressive strength at 28 days.
3. Ready Mix:
   A. Comply with ACI-301, ACI-304 and ASTM C-94.
   B. Maximum time between introduction of water and placing to be 1-1/2 hours.
   C. Minimum cement content shall be 470 pounds per cubic yard for 3000 PSI concrete and 560 for 4000 PSI.
   D. Maximum water cement ratio shall be 0.51 for 3000 PSI concrete and 0.47 for 4000 PSI.
   E. Maximum slump of concrete shall be 4 inches as determined by ASTM C-143. Maximum slump of concrete shall be 3 inches; and 8" after addition of HRWR to site verified 3" slump for concrete containing HRWR admixture as determined by ASTM C-143.
   F. All concrete exposed to the ground or weather shall be air entrained between 4-5% as determined by ASTM C-231 or C-173.
   G. Do not load trucks above rated capacity.
   H. High-Range Water-Reducing Admixture (Super Plasticizer) shall conform to ASTM C-494, Type F or G and contain not more than 0.1 percent chloride ions.
4. Prepare concrete test cylinders from each day's pour. Cylinders shall be properly cured, stored and tested. Submit results to Architect.
5. Throughout construction the concrete work shall be adequately protected against damage due to excessive loading, construction equipment, materials or methods, ice, rain, snow, excessive heat and freezing temperatures.
6. Early drying out of concrete, especially during the first 24 hours, shall be carefully guarded against. All surfaces shall be moist cured or protected using a membrane curing agent applied as soon as forms are removed. If membrane curing agent is used, exercise care not to damage coating.
7. Bending, tack welding, cutting or substitute reinforcing other than as shown on the contract drawing is prohibited unless specific approval for each case is given by architect.
8. Concrete shall be conveyed, placed and finished in a workmanlike manner.
9. Prior to making repairs, contractor shall obtain permission from architect to make patches for other than minor honeycombing.
10. Contractor to coordinate requirements of structural, architectural, mechanical and electrical drawings.
11. All materials shall be stored to protect them against the elements.

## ROOF LOADING SCHEDULE

DEAD LOAD:

| | | |
|---|---|---|
| ROOFING | 3.0 | P.S.F. |
| WOOD ROOF DECK | 3.0 | P.S.F. |
| WOOD STRUCTURE | 3.0 | P.S.F. |
| MECH., ELEC. | 3.0 | P.S.F. |
| CEILING | 1.0 | P.S.F. |
| MISC. | 2.0 | P.S.F. |
| | 15.0 | P.S.F. |

## FLOOR LOADING SCHEDULE

LIVE LOAD: 100.0 P.S.F.

## LATERAL LOADING SCHEDULE

WIND LOAD: IBC 2018 w/ USVI MODIFICATIONS
SIMPLIFIED PROV. for LOW-RISE BLDG.

BASIC WIND SPEED = 175 M.P.H
IMPORTANCE FACTOR (I) = 1.00 EXPOSURE D
INTERNAL PRESSURE COEFFICIENT GCpi = ±0.18
COMPONENT & CLADDING - ULTIMATE WIND PRESSURES
ROOF - 10 S.F. = +82.26, -105.11
WALLS - 10 S.F. = +93.88, -120.34.

SEISMIC LOADING: IBC 2018 - ASCE 7-16

SEISMIC RICK CATEGORY - II
IMPORTANCE FACTOR, Ie = 1.00
Ss = 1.217, S1 = 0.426
SITE CLASS = C
Sds = 0.812, Sd1 = 0.390
SEISMIC DESIGN CATEGORY - D

GENERAL NOTES (cont)

REINFORCING

1. All reinforcing bar details shall conform to the latest ACI code and detailing manual.
2. All bars shall be ASTM A-615, Grade 60.
3. Welded wire fabric shall be ASTM A-185.
4. Provide and schedule with the shop drawings all necessary accessories to hold reinforcing securely in position.
5. Clearance of main reinforcing from adjacent surfaces unless shown otherwise shall be:
   A. Unformed surfaces in contact with ground or exposed to the weather: 3"
   B. Bottom surfaces of slabs on grade: 3"
   C. Formed surfaces in contact with ground or exposed to weather:
      1. #5 bars or smaller: 1-1/2"
      2. Bars larger than #5: 2"
   D. Exterior wall surfaces: 2"
   E. In all cases not less than the diameter of the bar.
6. Tolerances for placing reinforcing shall be:
   A. +or- 1/4 inch for members with an effective depth of 24 inches or less.
   B. +or- 1/2 inch for members with an effective depth of more than 24 inches.
7. Where continuous bars are called for, they shall be run continuously around corners and lapped at necessary splices or hooked at discontinuous ends. Laps shall be 40 bar diameters. Bar laps may be offset to avoid control or construction joints.
8. Provide #5 top and bottom in slabs and #5 each face in walls at all four sides of an opening, unless otherwise noted. Extend bars 2'-0" beyond opening or hook where 2'-0" not possible.

MISCELLANEOUS

1. Contractor shall verify all dimensions, sections and elevations on the job.
2. Consult the Architectural, Mechanical and Electrical drawings for verification of location and dimensions of chases, inserts, openings, sleeves, washes, drips, reveals, depressions, equipment pads and other product requirements.
3. All foundation walls shall be braced during the operations of backfilling and compaction. Bracing shall be left in position until permanent restraints have been installed.

**DESIGN DEVELOPMENT**
**NOT FOR CONSTRUCTION**

JOHN N. HARRISON U.S.V.I. P.E. #0-19474-IB DATE


BENTON CONSTRUCTION, LLC
3000 ORANGE GROVE, CHRISTIANSTED
ST. CROIX, U.S. VIRGIN ISLANDS 00820
PHONE: (340) 718-7222 FAX: (340) 718-4778
WEBSITE: WWW.BCVI.COM

ARCHITECT
SILVERBERG ASSOCIATES VI, P.C.
ARCHITECTS
59 COMPANY STREET, SUITE B, CHRISTIANSTED
ST. CROIX, USVI 00820
NJ PHONE: (609) 921-1567 NJ FAX: (609) 921-8326

MEP ENGINEER
T.J.D. ENGINEERING ASSOCIATES, INC.
2 Hancock Drive, West Milford, N.J. 07480
Certificate of Authorization 24GA27944000
Phone 973-208-0054
Fax 973-208-0851

STRUCTURAL ENGINEER
HARRISON HAMNETT, P.C.
40 Knowles Street
Pennington, New Jersey 08534
Office (609) 818-1808
Fax (609) 818-1809


OWNER
Tropical SHIPPING

PROFESSIONAL SEAL:
THIS DRAWING SHALL NOT BE USED FOR CONSTRUCTION UNLESS A PROFESSIONAL'S SEAL AND SIGNATURE ARE ON THE DRAWING

PROJECT TITLE / DESCRIPTION:
TROPICAL SHIPPING NEW OFFICES

FACILITY LOCATION:
TROPICAL SHIPPING L.L.C.
(LEASED PLOT)
PLOT NO. 8
EAST HOPE (H.O.V.I.C. LANDS)
QUEEN'S QUARTER, ST. CROIX USVI

DATE: 5-28-24

| NO: | REVISION: | DATE: |
|---|---|---|
| | | |

PROJECT NUMBER: 22254

DRAWING TITLE:
GENERAL NOTES & TYP. SECTIONS

SHEET NUMBER: S-301

SHEET OF


Drawing name: C:\Users\Natalia\AppData\Local\Temp\AcPublish_32972\Tropical Shipping.dwg
Date: May 23, 2024 - 5:22pm

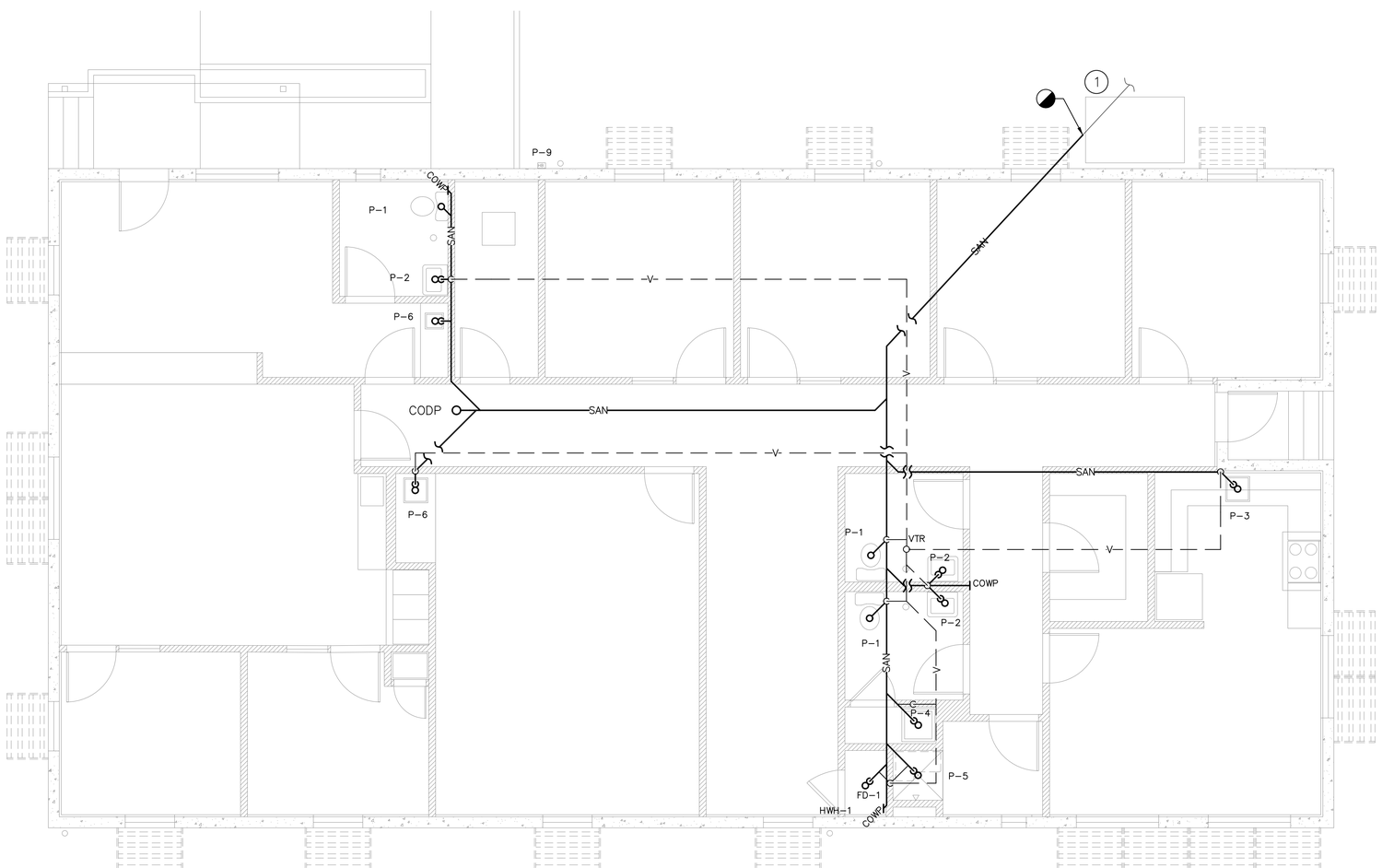


## NOTES

1. CONNECT TO EXISITING SANITARY PIPE OUTSIDE BUILDING.

**DESIGN DEVELOPMENT**
**NOT FOR CONSTRUCTION**

L1 SANITARY PLAN

1/4"


BENTON CONSTRUCTION, LLC
3000 ORANGE GROVE, CHRISTIANSTED
ST. CROIX, U.S. VIRGIN ISLANDS 00820
PHONE: (340) 718-7222 FAX: (340) 718-4779
WEBSITE: WWW.JBCVI.COM

ARCHITECT
SILVERBERG ASSOCIATES VI, P.C.
ARCHITECTS
55 COMPANY STREET, SUITE B, CHRISTIANSTED
ST. CROIX, USVI 00820
NJ PHONE: (609) 921-1867 NJ FAX: (609) 921-8326

MEP ENGINEER
T.J.D. ENGINEERING ASSOCIATES, INC.
2 Hancock Drive, West Milford, N.J. 07480
Certificate of Authorization 24GA27944000
Phone 973-208-0054
Fax 973-208-0851


OWNER
Tropical SHIPPING

PROFESSIONAL SEAL:
DESIGN DEVELOPMENT NOT FOR CONSTRUCTION
THIS DRAWING SHALL NOT BE USED FOR CONSTRUCTION UNLESS A PROFESSIONAL'S SEAL AND SIGNATURE ARE ON THE DRAWING

PROJECT TITLE / DESCRIPTION:
TROPICAL SHIPPING
NEW OFFICES

FACILITY LOCATION:
TROPICAL SHIPPING L.L.C.
(LEASED PLOT)
PLOT NO. 8
EAST HOPE (H.O.V.I.C. LANDS)
QUEEN'S QUARTER, ST. CROIX USVI

DATE: MAY 15, 2024

| NO: | REVISION: | DATE: |
|---|---|---|
| 1 | REVIEW | 5/28/24 |

PROJECT NUMBER: 2421B

DRAWING TITLE: SANITARY PLAN

SHEET NUMBER: P101

SHEET 1 OF 6

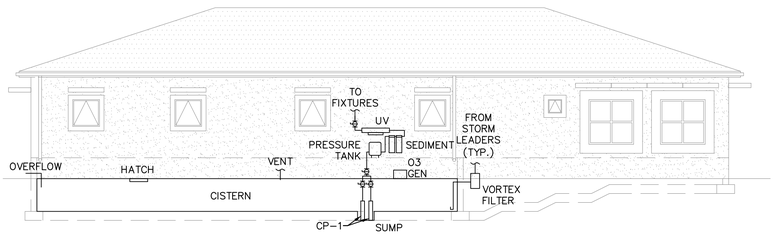


CISTERN DETAIL

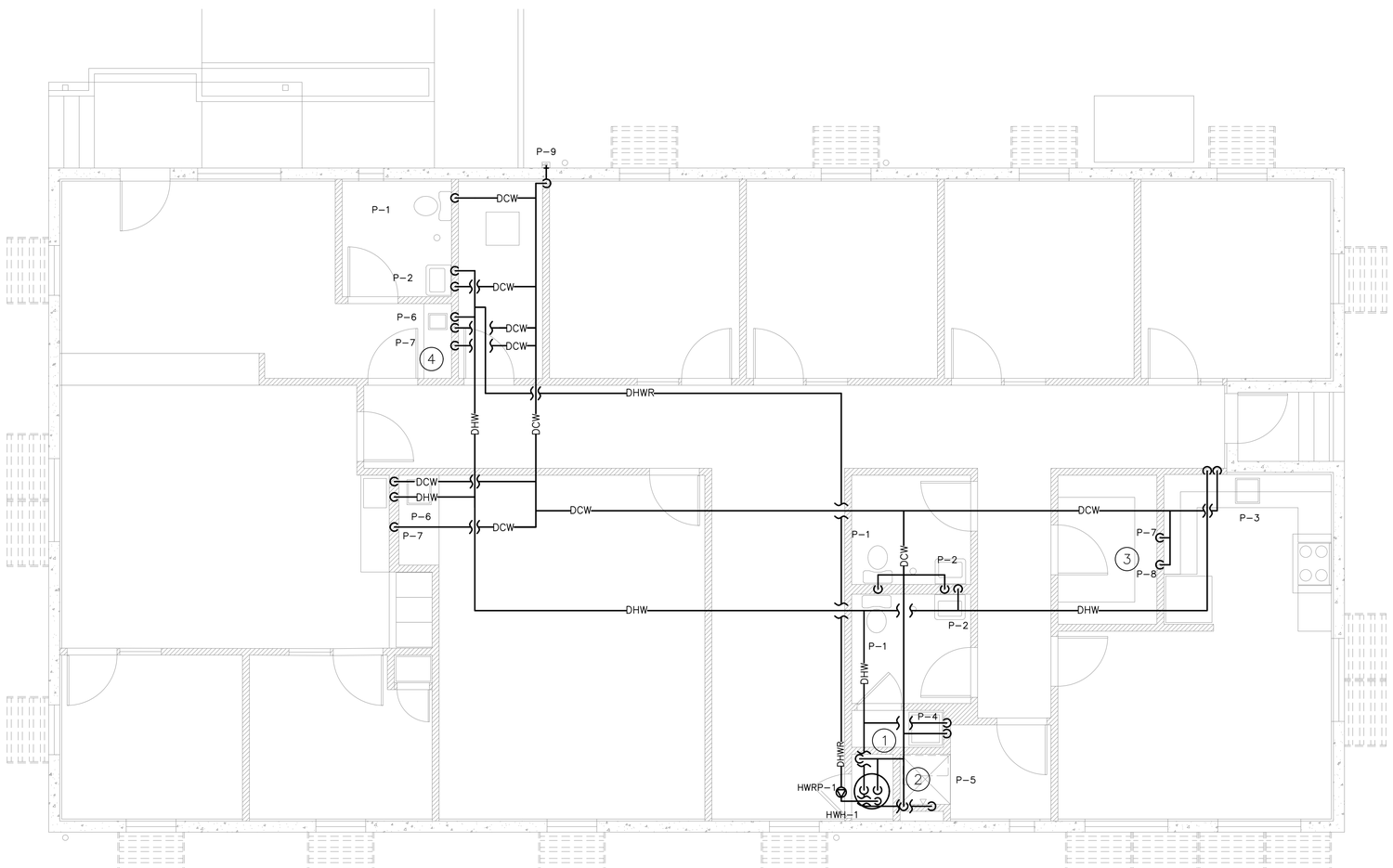


## NOTES

1. DCW UP FROM CISTERN. SEE RISER FOR PIPE SIZES.
2. NEW HOT WATER HEATER (SEE SCHEDULE). INSTALL IN ACCORDANCE WITH MANUFACTURER'S INSTRUCTIONS. ROUTE RELIEF TO MOP SINK.
3. ROUTE DCW TUBING TO REFRIGERATOR AND COFFEE MAKER (W/ BFP FOR EACH). COORDINATE LOCATIONS WITH OWNER AND PROVIDE SHUTOFF VALVE.
4. ROUTE DCW TUBING TO COFFEE MAKER (W/ BFP). COORDINATE LOCATIONS WITH OWNER AND PROVIDE SHUTOFF VALVE.

**DESIGN DEVELOPMENT**
**NOT FOR CONSTRUCTION**

L1 PLUMBING PLAN

1/4"


BENTON CONSTRUCTION, LLC
3000 ORANGE GROVE, CHRISTIANSTED
ST. CROIX, U.S. VIRGIN ISLANDS 00820
PHONE: (340) 718-7222 FAX: (340) 718-4779
WEBSITE: WWW.JBCVI.COM

ARCHITECT
SILVERBERG ASSOCIATES VI, P.C.
ARCHITECTS
55 COMPANY STREET, SUITE B, CHRISTIANSTED
ST. CROIX, USVI 00820
NJ PHONE: (609) 921-1867 NJ FAX: (609) 921-8326

MEP ENGINEER
T.J.D. ENGINEERING ASSOCIATES, INC.
2 Hancock Drive, West Milford, N.J. 07480
Certificate of Authorization 24GA27944000
Phone 973-208-0054
Fax 973-208-0851


OWNER
Tropical SHIPPING

PROFESSIONAL SEAL:
DESIGN DEVELOPMENT NOT FOR CONSTRUCTION
THIS DRAWING SHALL NOT BE USED FOR CONSTRUCTION UNLESS A PROFESSIONAL'S SEAL AND SIGNATURE ARE ON THE DRAWING

PROJECT TITLE / DESCRIPTION:
TROPICAL SHIPPING NEW OFFICES

FACILITY LOCATION:
TROPICAL SHIPPING L.L.C.
(LEASED PLOT)
PLOT NO. 8
EAST HOPE (H.O.V.I.C. LANDS)
QUEEN'S QUARTER, ST. CROIX USVI

DATE: MAY 15, 2024

| NO: | REVISION: | DATE: |
|---|---|---|
| 1 | REVIEW | 5/28/24 |

PROJECT NUMBER: 2421B

DRAWING TITLE: PLUMBING PLAN

SHEET NUMBER: P102

SHEET 2 OF 6

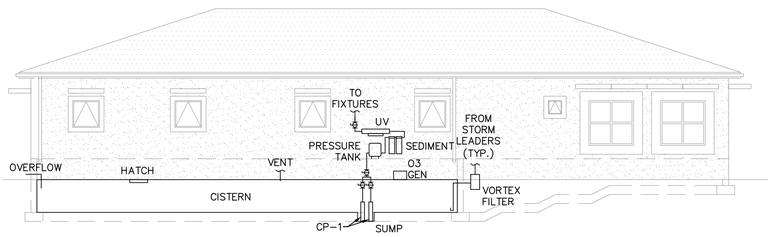


CISTERN DETAIL

## NOTES

1. PROVIDE ACCESS DOOR TO CISTERN FILLING. INSTALL 3" THREADED FEMALE CONNECTION RECESSED IN ACCESS PORT. COORDINATE WITH WATER DELIVERY REQUIREMENTS.
2. PROVIDE 6" FLAP VALVE WITH VENTED SCREEN TAFV15-6" ON OUTLET OF PIPE.

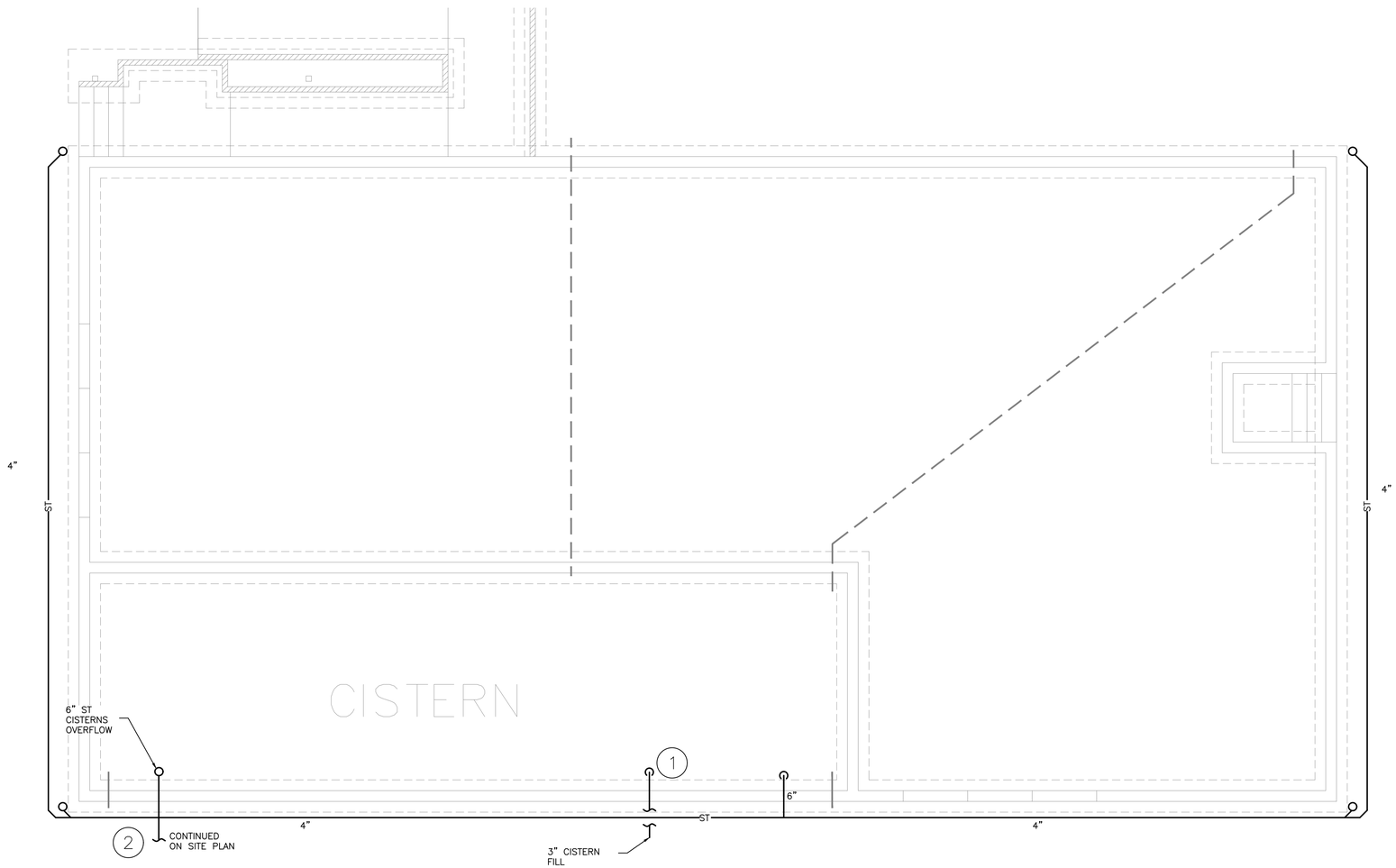


DESIGN DEVELOPMENT
NOT FOR CONSTRUCTION

L1 STORMWATER PLAN

1/4"


BENTON CONSTRUCTION, LLC
3000 ORANGE GROVE, CHRISTIANSTED
ST. CROIX, U.S. VIRGIN ISLANDS 00820
PHONE: (340) 718-7222 FAX: (340) 718-4779
WEBSITE: WWW.JBCVI.COM

ARCHITECT
SILVERBERG ASSOCIATES VI, P.C.
ARCHITECTS
55 COMPANY STREET, SUITE B, CHRISTIANSTED
ST. CROIX, USVI 00820
NJ PHONE: (609) 921-1867 NJ FAX: (609) 921-8326

MEP ENGINEER
T.J.D. ENGINEERING ASSOCIATES, INC.
2 Hancock Drive, West Milford, N.J. 07480
Certificate of Authorization 24GA27944000
Phone 973-208-0054
Fax 973-208-0851


OWNER
Tropical SHIPPING

PROFESSIONAL SEAL:
DESIGN DEVELOPMENT NOT FOR CONSTRUCTION
THIS DRAWING SHALL NOT BE USED FOR CONSTRUCTION UNLESS A PROFESSIONAL'S SEAL AND SIGNATURE ARE ON THE DRAWING

PROJECT TITLE / DESCRIPTION:
TROPICAL SHIPPING NEW OFFICES

FACILITY LOCATION:
TROPICAL SHIPPING L.L.C.
(LEASED PLOT)
PLOT NO. 8
EAST HOPE (H.O.V.I.C. LANDS)
QUEEN'S QUARTER, ST. CROIX USVI

DATE: MAY 15, 2024

| NO: | REVISION: | DATE: |
|---|---|---|
| 1 | REVIEW | 5/28/24 |

PROJECT NUMBER: 2421B

DRAWING TITLE: STORM WATER PLAN

SHEET NUMBER: P103

SHEET 3 OF 6

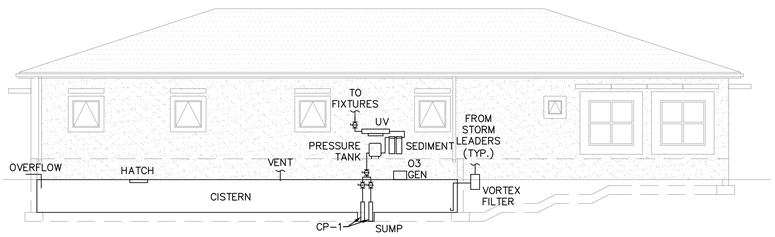


CISTERN DETAIL

## NOTES

1. PROVIDE DIVERTER VALVE IN DOWNSPOUT.

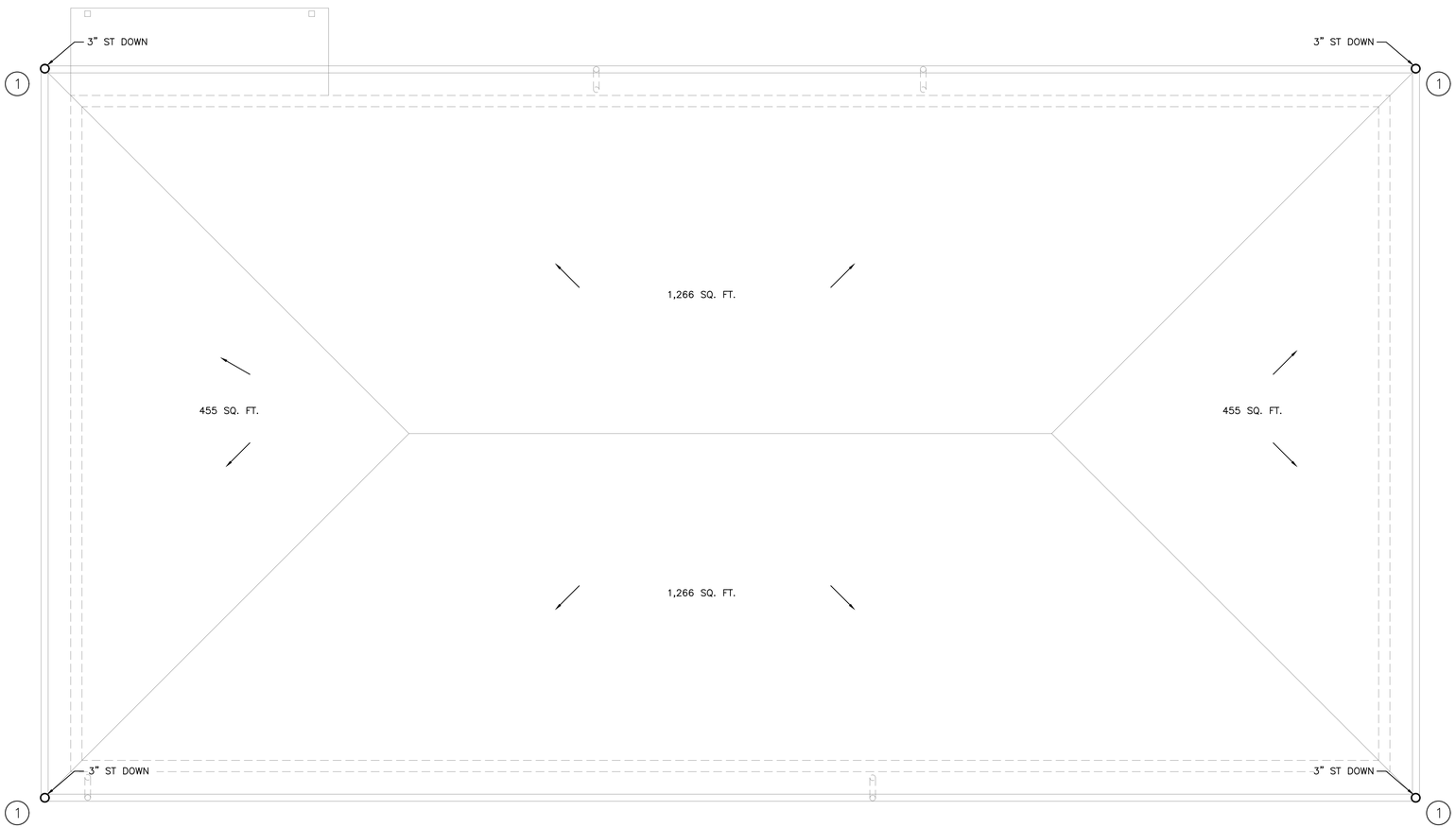


DESIGN DEVELOPMENT
NOT FOR CONSTRUCTION

L1 STORMWATER ROOF PLAN

1/4"


BENTON CONSTRUCTION, LLC
3000 ORANGE GROVE, CHRISTIANSTED
ST. CROIX, U.S. VIRGIN ISLANDS 00820
PHONE: (340) 718-7222 FAX: (340) 718-4779
WEBSITE: WWW.JBCVI.COM

ARCHITECT
SILVERBERG ASSOCIATES VI, P.C.
ARCHITECTS
55 COMPANY STREET, SUITE B, CHRISTIANSTED
ST. CROIX, USVI 00820
NJ PHONE: (609) 921-1867 NJ FAX: (609) 921-8326

MEP ENGINEER
T.J.D. ENGINEERING ASSOCIATES, INC.
2 Hancock Drive, West Milford, N.J. 07480
Certificate of Authorization 24GA27944000
Phone 973-208-0054
Fax 973-208-0851


OWNER
Tropical SHIPPING

PROFESSIONAL SEAL:
DESIGN DEVELOPMENT NOT FOR CONSTRUCTION
THIS DRAWING SHALL NOT BE USED FOR CONSTRUCTION UNLESS A PROFESSIONAL'S SEAL AND SIGNATURE ARE ON THE DRAWING

PROJECT TITLE / DESCRIPTION:
TROPICAL SHIPPING NEW OFFICES

FACILITY LOCATION:
TROPICAL SHIPPING L.L.C.
(LEASED PLOT)
PLOT NO. 8
EAST HOPE (H.O.V.I.C. LANDS)
QUEEN'S QUARTER, ST. CROIX USVI

DATE: MAY 15, 2024

| NO: | REVISION: | DATE: |
|---|---|---|
| 1 | REVIEW | 5/28/24 |

PROJECT NUMBER: 2421B

DRAWING TITLE: STORM WATER ROOF PLAN

SHEET NUMBER: P104

SHEET 4 OF 6

| WATER HEATER SCHEDULE | | | | | | | | |
|---|---|---|---|---|---|---|---|---|
| SYMBOL | MANUFACTURER | MODEL | TANK CAPACITY (GAL) | ELECTRIC INPUT (KW) | VOLTS | AMPS | PHASE | REMARKS |
| HWH-1 | AO SMITH | DEL-30S-4 | 20 | 4.5/4.5 | 208 | | | |

| PUMP SCHEDULE | | | | | | | | | | |
|---|---|---|---|---|---|---|---|---|---|---|
| SYMBOL | MANUFACTURER | MODEL | GPM | HEAD (FT H2O) | SUCT./DISCH. | ELECTRICAL | | | | REMARKS |
| | | | | | | HP | VOLTS | AMPS | PHASE | |
| HWRP-1 | TACO | 008-IQSF6-IFC | 0-13 | 0-14.5 | 0.75"/0.75" | 1/25 | 115 | 0.84 | 1 | PLUG IN |

| PLUMBING FIXTURE SCHEDULE | | | | | | | | | | |
|---|---|---|---|---|---|---|---|---|---|---|
| SYMBOL | FIXTURE TYPE | MANUFACTURER | MODEL | FLOW | PIPE SIZES | | | | | REMARKS |
| | | | | | TRAP | DRAIN | VENT | DCW | DHW | |
| P-1 | WATER CLOSET | KOHLER | K-25077-SSTR | 1.28 GPF | - | 3" | 1.5" | 1/2" | - | K-20110 SEAT |
| P-2 | LAVATORY | KOHLER | K-2006 | 1 GPM | 1.5" | 1.5" | 1.5" | 1/2" | 1/2" | K-800T20-4AKL FAUCET, K-7114-A-CP DRAIN, |
| P-3 | KITCHEN SINK | ELKAY | ECTRU17179TC | 1.8 | 1.5" | 1.5" | 1.5" | 1/2" | 1/2" | LKAV3032CR FAUCET |
| P-4 | MOP SINK | MUSTEE | 63M | 6 GPM | 3" | 3" | 1.5" | 1/2" | 1/2" | 63.600A FAUCET, 67.2424 & 67.24C WALLS |
| P-5 | SHOWER | MUSTEE | 140 | 1.75 GPM | 2" | 2" | 1.5" | 1/2" | 1/2" | 48.700 DOOR, KOHLER K-630T40-4AG FAUCET |
| P-6 | PANTRY SINK | ELKAY | ECTRU12179TC | 1.8 GPM | 1.5" | 1.5" | 1.5" | 1/2" | 1/2" | LKAV3032 FAUCET |
| P-7 | COFFEE OUTLET BOX | OATEY | MODA | | - | - | - | 1/2" | - | WATTS 3/8" SD-3 BFP |
| P-8 | WATER OUTLET BOX | OATEY | MODA | | - | - | - | 1/2" | - | WATTS 3/8" 9BD BFP |
| P-9 | HOSE BIBB | WATTS | HY-330 | 8 GPM | - | - | - | 3/4" | - | - |
| FD-1 | FLOOR DRAIN | WATTS | FD-100-A | - | - | 2" | - | - | - | SIDE OUTLET WITH TRAP PRIMER TAPPING |

## D1 PLUMBING SCHEDULES

NS

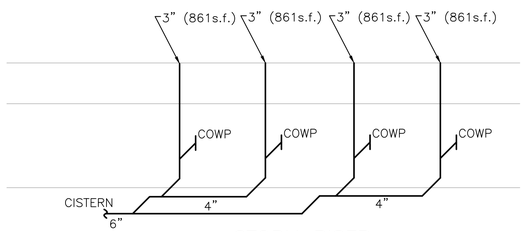


STORM RISER
NOT TO SCALE

SIZED FOR 4"/HR

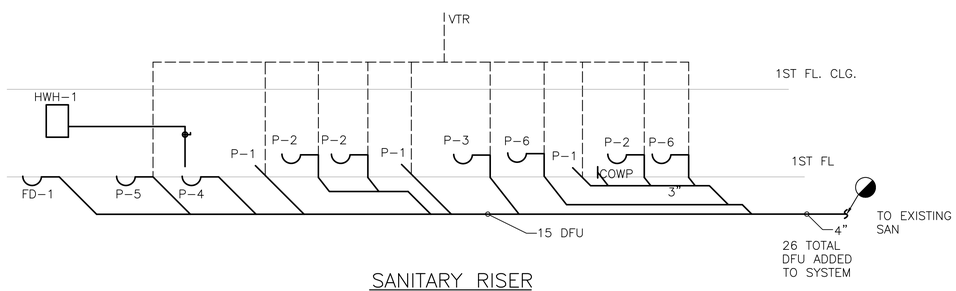


SANITARY RISER
NOT TO SCALE

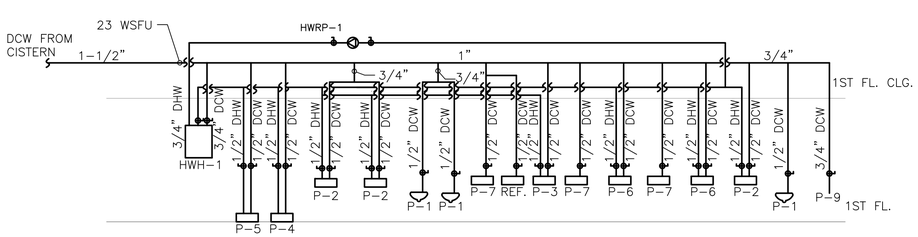


PLUMBING RISER
NOT TO SCALE

2021 NSPC NJ EDITION

## L1 PLUMBING, SANITARY AND STORMWATER RISER

NS

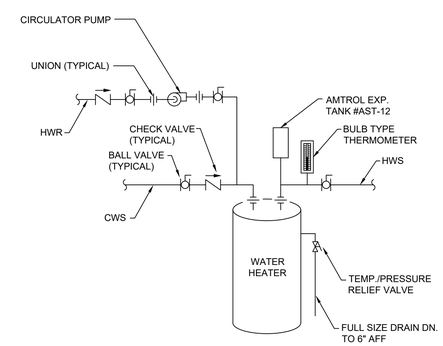


Typical Water Heater Detail
N.T.S.

DESIGN DEVELOPMENT
NOT FOR CONSTRUCTION

## L6 PLUMBING DETAILS

NS


BENTON CONSTRUCTION, LLC
3000 ORANGE GROVE, CHRISTIANSTED
ST. CROIX, U.S. VIRGIN ISLANDS 00820
PHONE: (340) 718-7222 FAX: (340) 718-4779
WEBSITE: WWW.JBCVI.COM

ARCHITECT
SILVERBERG ASSOCIATES VI, P.C.
ARCHITECTS
55 COMPANY STREET, SUITE B, CHRISTIANSTED
ST. CROIX, USVI 00820
NJ PHONE: (609) 921-1867 NJ FAX: (609) 921-8326

MEP ENGINEER
T.J.D. ENGINEERING ASSOCIATES, INC.
2 Hancock Drive, West Milford, N.J. 07480
Certificate of Authorization 24GA27944000
Phone 973-208-0054
Fax 973-208-0851


OWNER
Tropical SHIPPING

PROFESSIONAL SEAL:
DESIGN DEVELOPMENT NOT FOR CONSTRUCTION
THIS DRAWING SHALL NOT BE USED FOR CONSTRUCTION UNLESS A PROFESSIONAL'S SEAL AND SIGNATURE ARE ON THE DRAWING

PROJECT TITLE / DESCRIPTION:
TROPICAL SHIPPING NEW OFFICES

FACILITY LOCATION:
TROPICAL SHIPPING L.L.C. (LEASED PLOT)
PLOT NO. 8
EAST HOPE (H.O.V.I.C. LANDS)
QUEEN'S QUARTER, ST. CROIX USVI

DATE: MAY 15, 2024

| NO: | REVISION: | DATE: |
|---|---|---|
| 1 | REVIEW | 5/28/24 |

PROJECT NUMBER: 2421B

DRAWING TITLE: PLUMBING SCHED RISERS & DETAILS

SHEET NUMBER: P105

SHEET 5 OF 6

DIVISION 15 - MECHANICAL
SECTION 15400 - PLUMBING

A. GENERAL
1. The entire installation shall be in accordance with all standards of good practice in the trade. Materials shall be new and in accordance with the latest issue of NSF/ANSI 61&372, ASTM, ANSI, and AWWA standards and Specifications, whichever applies. Provide all accessories, etc., for a complete, quiet and efficient functioning installation. All work, machinery, fixtures, accessories, and materials shall be adequately and effectively protected at all times from any damage. Make good all damage caused by neglect to observe this requirement and all damage either directly or indirectly caused by workmen. Protect work to prevent obstruction or damage. All pipe openings shall be closed with caps or plugs during installation.
2. All machinery, fixtures, accessories, and equipment shall be tightly covered and protected against dirt, water, and chemical or mechanical injury. All enameled and vitreous china fixtures shall be protected by one (1) layer of corrugated cardboard using a commercial paste that will not injure or cause stains on the fixtures. At final completion, deliver all work whole and in perfect, unblemished condition. Use of fixtures during construction is prohibited.

B. INSTALLATION
1. Fixtures and accessories shall be set level, plumb, and in proper alignment with reference to adjacent walls. All surfaces coming in contact with walls, floors, or other fixtures shall have properly planed surfaces with suitable contact on walls and floors.
2. All piping, equipment, and fixtures shall be supported in a substantial and safe manner, rigidly enough to prevent vibration from any cause, and anchored sufficiently to prevent undue strain on branch lines, connecting fixtures, and equipment, and shall be sufficient for the seismic category indicated within the Contract Documents.
3. All hangers shall be installed to maintain required pitching of lines and so as to prevent vibration while allowing for proper expansion and contracting of piping. All waste, soil, and vent piping shall have a hanger at each hub or every five (5) feet, at all changes of direction, base of stacks, and all branch lines, as a minimum. Water piping shall be supported at a maximum of every eight (8) feet, or as specified, at all changes of direction, base of risers, and on all branch lines. Hanger spacing shall be sufficient for the seismic category indicated within the Contract Documents.
4. Piping run under floor slab shall be installed after the sub-grade is the proper level – then installed and backfilled. All backfill shall be tamped to meet general construction compaction requirements.
5. On completion of work and at such times as directed, remove all the protective covering from all fixtures, equipment, etc. Fixtures shall be washed and metal parts polished; equipment cleaned and oiled; traps and piping flushed and cleared of all dirt and adjusted for quiet operation. All pumps, machinery, and controls shall be tested, adjusted, and left in perfect working condition.
6. The installation of plumbing fixtures shall comply with the requirements of the Americans With Disabilities Act.
7. Contact between piping and dissimilar metals, such as hangers, building structure work, or equipment, shall be avoided to prevent galvanic action. All non-ferrous tubing or piping shall be insulated from ferrous piping and supports of dissimilar metal by means of approved dielectric material. At all mating of dissimilar metals, provide isolating type dielectric unions, as manufactured by EPCO or Watts Regulator. Plastic isolating bushings will not be acceptable.
8. Non-metallic Piping routed through supply or return air plenums shall be listed and labeled for use in air plenums and shall have a flame spread index of not more than 25 and a smoke developed index of not more than 50 when tested in accordance with ASTM E84 or UL 723. Non-metallic piping not plenum rated shall be covered in 3M Fire Barrier wrap.

C. TESTING OF SYSTEMS
1. Notify the authorities having jurisdiction over plumbing work three (3) days before the tests will be made.
2. Furnish all labor, services, and apparatus for tests, adjustments, and recordings.
3. Defects disclosed by tests shall be rectified without additional cost to the Owner. After all defects have been rectified, re-test piping until it shows no defects and is absolutely tight.
4. Perform tests in accordance with the State, Municipal, and Utility Company requirements and under the direction of, and subject to, the approval of the Architect and/or Engineer.
5. Provide and remove all temporary piping and line connections required for the tests. Dispose of test water and all the wastes after tests.

D. WATER SUPPLY PIPING
1. Connections to fixtures and equipment shall conform to local requirements relative to submerged inlets and protective methods to be applied to prevent contamination of the water supply.
2. Provide water hammer arrestor on water supply branches to flush valve fixtures and where indicated on the drawings.
3. Make connections between dissimilar pipes with proper adaptors.
4. All pipe and fittings shall be kept clean with the exposed ends of in-completed or unconnected work to be plugged.
5. Exterior Below Ground Piping: Pipe and fittings Type "K" copper tubing (soft drawn), flared joints only.
6. Interior Piping: Pipe and fittings Type "L" copper tubing (hard drawn) with wrought copper solder fittings using 95/5 solder.
7. The Contractor shall furnish and install the water meter and pay all charges in connection with the meter installation.
8. Domestic Water System Test: Apply an air pressure test to all parts of the water supply systems before the piping is concealed and before the fixtures are connected. A hydrostatic pressure of not less than 150 lbs. per square inch pressure shall be applied to the system for eight (8) hours. There shall be no leaks at any point in the system at this pressure.
9. Provide for the cleaning, sterilizing and purging of all piping systems after installation and before final release to the Owner. Furnish and install temporary material, equipment, and auxiliary fittings to perform the cleaning work. Accessory and control elements within the system which may be damaged by the cleaning operation shall be removed or otherwise protected during the cleaning process. After cleaning, the systems shall be thoroughly flushed until all evidence of dirt and cleaning solution have disappeared.
10. The entire new potable water piping system shall be thoroughly sterilized with a new solution containing not less than fifty (50) parts per million of available chlorine. The sterilization solution shall be allowed to remain in the system for a period of not less than eight (8) hours during which time all valves and faucets shall be opened and closed several times. After sterilization, the solution shall be flushed from the system with clean water until the residual chlorine content is not greater than 0.2 parts per million, unless otherwise directed.
11. Any stoppage, discoloration, or other damage to parts of the plumbing system, building, its finish or furnishings due to failure to properly clean the system and equipment shall be repaired at no additional cost to the Owner. Submit evidence that the requirements of this paragraph have been complied with.

E. DRAINAGE SYSTEM PIPING REQUIREMENTS
1. Make changes in direction of piping with long radius fittings.
2. All pipe and fittings shall be kept clean, with the exposed ends of in-completed or unconnected work to be plugged.
3. Supply clamping collars with drains where flashing is required or waterproofing membrane is penetrated.
4. Make all pipes and drains penetrating the ground floor watertight with a mastic sealing compound.
5. Sanitary Drainage:
   a. Above Ground: Pipe and fittings up to 2", Type DWV copper pipe, cast brass drainage fittings using 50/50 solder or no-hub cast iron system. Pipe and fittings 3" and over shall be:
      I. No-hub cast iron system
      II. Solid wall ABS schedule 40 (ASTM D2661)
      III. Solid wall PVC schedule 40 (ASTM D2665
   b. Below Ground: Interior and Exterior – Pipe and Fittings – Service weight cast iron, hub and spigot joints made up with elastomeric compression type gaskets conforming to ASTM C564-65T.
   c. No hub cast iron system pipe fittings and couplings shall conform to Cast Iron Soil Pipe Institute.
6. Sanitary Vents
   a. Above Ground: Pipe and Fittings – Same as specified for sanitary drainage.
   b. Below Ground: Pipe and Fittings – Same as specified for sanitary drainage.
7. Storm
   a. Above Ground: As scheduled for Sanitary Drainage.
   b. Below Ground: As scheduled for Sanitary Drainage or No-hub cast iron at Contractor's option.
8. Test all parts of the drainage (sanitary, waste, and interior storm) system before the pipes are concealed or fixtures set in place. The test may be applied in sections. All openings of each system to be tested shall be tightly closed except the highest opening above the roof, and the entire system shall be filled with water up to the overflow of this highest opening.
9. All parts of the system shall be subject to not less than 10 ft. of hydrostatic head, except the uppermost 10 ft. of the piping directly below the opening. The water shall remain in the system for not less than one (1) hour, after which time no leaks at any joints or lowering of the water level at the overflow shall be visible.
10. Easily accessible cleanouts shall be provided at the foot of each soil, waste, or leader stack, on all hand holes of running traps, at each 90 degree change of direction or horizontal runs, and intervals as specified in the Plumbing Code.
11. Cleanouts for interior underground pipe shall be set flush with floor and terminated in a deck plate.
12. Cleanouts shall be of the same size as the pipe, up to 4" in size. For pipes larger than 4", the cleanout shall not be less than 4" in size..

F. INSULATION
1. **Cold Water Piping** shall be insulated with ½" thick fiberglass in pipe sizes up to 1". Pipe sizes above 1" shall be insulated with 1" thick fiberglass.
2. **Hot Water Piping** shall be insulated with 1" thick fiberglass in pipe sizes up to 1-1/4". Pipe sizes 1-1/2" and above shall be insulated with 1-1/2" thick fiberglass.
3. Roof drainage sumps and leaders shall be insulated similarly to domestic cold water piping. Leaders and sumps shall be insulated on the horizontal, only to and including the first elbow on the vertical.

G. SPECIALTIES
1. **Valves**
   a. ½" to 1" sizes --- Bronze body, screwed end or sweat end for copper pipe, full port ball valve, two-piece construction, blowout-proof stem.
      (1) Nibco Model T-585-80 Lead Free.
      (2) Apollo Model 77FLF-100
      (3) Watts Model LFB-60800 as manufactured by Watts Regulator
   b. 1-1/4" to 2" sizes --- Bronze body, screwed end or sweat end for copper pipe, full port ball valve, three-piece construction, blowout-proof stem.
      (1) Nibco Model T-595-Y-LF
      (2) Apollo Model 82LF-100
      (3) Watts Model LFB-6800 or LFB-6801
   c. 2-1/2" and larger --- Iron body, full lug pattern Butterfly valve with EPDM seat, 316 stainless disc, 416 stainless stem, bronze bushings, unless otherwise indicated. Valves shall be BOS-CL as manufactured by DeZurik or LD-2022 as manufactured by NIBCO and shall meet the NSF 61/372 standard.
2. **Gate Valves** shall be used at water meter, bronze body, solid wedge, inside screw non-rising stem, screw-in bonnet, with drain plug, 200 lbs. non-shock cold water, Figure No. 1241 solder end, Figure No. 370 threaded end as manufactured by Jenkins, or equal by Hammond, Kennedy, or Wolverine Brass.
3. **Cleanout Deck Plate – Type CODP**: Extension body, cast iron bronze plug, Zurn 1405-2, or approved equal.
4. **Cleanout-Wall – Type COWP**: Bronze plug and stainless steel access plate with non-corroding securing screw, Zurn Z-1460-9, or approved equal.

END OF SECTION 15400

DESIGN DEVELOPMENT
NOT FOR CONSTRUCTION

L1 PLUMBING SCHEDULE

NS


BENTON CONSTRUCTION, LLC
3000 ORANGE GROVE, CHRISTIANSTED
ST. CROIX, U.S. VIRGIN ISLANDS 00820
PHONE: (340) 718-7222 FAX: (340) 718-4779
WEBSITE: WWW.JBCVI.COM

ARCHITECT
SILVERBERG ASSOCIATES VI, P.C.
ARCHITECTS
55 COMPANY STREET, SUITE B, CHRISTIANSTED
ST. CROIX, USVI 00820
NJ PHONE: (609) 921-1867 NJ FAX: (609) 921-8326

MEP ENGINEER
T.J.D. ENGINEERING ASSOCIATES, INC.
2 Hancock Drive, West Milford, N.J. 07480
Certificate of Authorization 24GA27944000
Phone 973-208-0054
Fax 973-208-0851


OWNER
Tropical SHIPPING

PROFESSIONAL SEAL:
DESIGN DEVELOPMENT NOT FOR CONSTRUCTION
THIS DRAWING SHALL NOT BE USED FOR CONSTRUCTION UNLESS A PROFESSIONAL'S SEAL AND SIGNATURE ARE ON THE DRAWING

PROJECT TITLE / DESCRIPTION:
TROPICAL SHIPPING
NEW OFFICES

FACILITY LOCATION:
TROPICAL SHIPPING L.L.C.
(LEASED PLOT)
PLOT NO. 8
EAST HOPE (H.O.V.I.C. LANDS)
QUEEN'S QUARTER, ST. CROIX USVI

DATE: MAY 15, 2024

| NO: | REVISION: | DATE: |
|---|---|---|
| 1 | REVIEW | 5/28/24 |

PROJECT NUMBER: 2421B

DRAWING TITLE:
PLUMBING SPECIFICATION

SHEET NUMBER:
P106

SHEET 6 OF 6

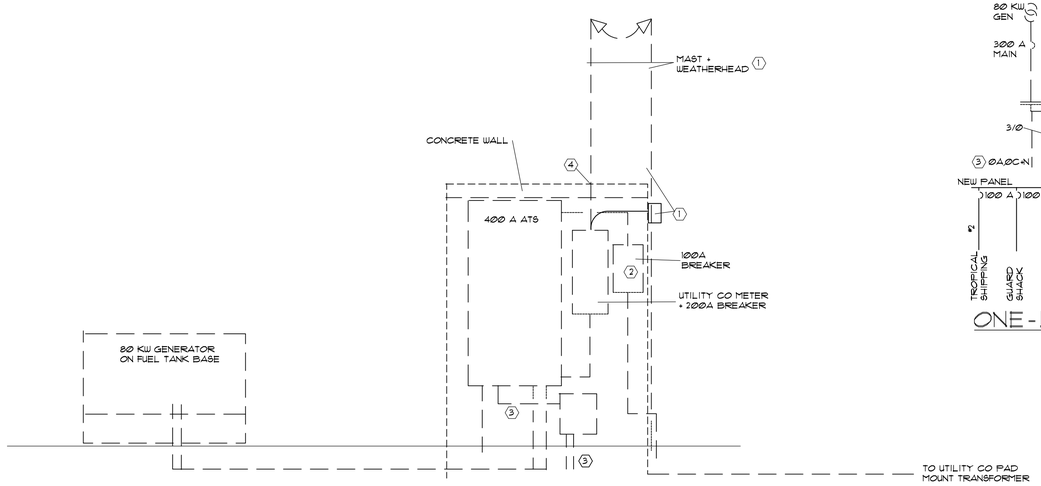


DISTRIBUTION DIAGRAM

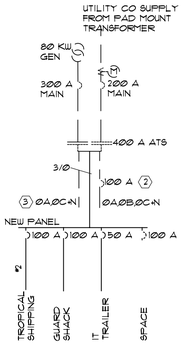


ONE-LINE

NEW BUILDING 3200 SQ' @ 6W/SQ'=20000W
20KW 212Ø-208V = 50AMPS PROVIDE 100A
FEEDER TO BUILDING PANEL.

CONSTRUCTION NOTES

1. INTERRUPT EXISTING RACEWAY AND INSTALL 18" SQUARE x 4" DEEP NONMETALLIC PULL BOX W/ SCREW COVER FOR EXTENSION OF SERVICE CONDUCTORS TO METER.
2. REMOVE 100A BREAKER AND ASSOCIATED RACEWAYS AND CONDUCTORS AND REWORK UNDERGROUND FEEDER TO GUARD SHACK TO NEW PANEL AND CONNECT TO RESPECTIVE BREAKER.
3. REMOVE UNPROTECTED FEEDER, RACEWAYS AND CONDUCTORS AND REWORK UNDERGROUND FEEDER TO IT TRAILER TO NEW PANEL AND CONNECT TO RESPECTIVE BREAKER.
4. SEAL OPENING IN CONCRETE WALL (REMOVAL OF FEEDER RACEWAY)

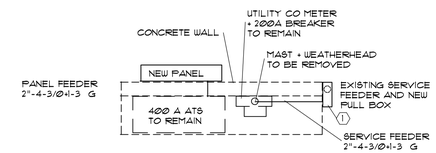


PLAN - NEW WORK

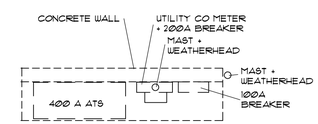


PLAN - EXISTING

**DESIGN DEVELOPMENT**
**NOT FOR CONSTRUCTION**

THIS DRAWING SHALL NOT BE USED FOR CONSTRUCTION UNLESS A PROFESSIONAL'S SEAL AND SIGNATURE ARE ON THE DRAWING


BENTON CONSTRUCTION, LLC
3000 ORANGE GROVE, CHRISTIANSTED
ST. CROIX, U.S. VIRGIN ISLANDS 00820
PHONE: (340) 718-7222 FAX: (340) 718-4778
WEBSITE: WWW.JBCVI.COM

ARCHITECT
SILVERBERG ASSOCIATES VI, P.C.
ARCHITECTS
59 COMPANY STREET, SUITE B, CHRISTIANSTED
ST. CROIX, USVI 00820
NJ PHONE: (609) 921-1867 NJ FAX: (609) 921-8326

MEP ENGINEER
T.J.D. ENGINEERING ASSOCIATES, INC.
2 Hancock Drive, West Milford, N.J. 07480
Certificate of Authorization 24GA27944000
Phone 973-208-0054
Fax 973-208-0851

STRUCTURAL ENGINEER
HARRISON HAMNETT, P.C.
40 Knowles Street
Pennington, New Jersey 08534
Office (609) 818-1808
Fax (609) 818-1809


OWNER
Tropical SHIPPING

PROFESSIONAL SEAL:

PROJECT TITLE / DESCRIPTION:
TROPICAL SHIPPING NEW OFFICES

FACILITY LOCATION:
TROPICAL SHIPPING L.L.C.
(LEASED PLOT)

PLOT NO. 8
EAST HOPE (H.O.V.I.C. LANDS)
QUEEN'S QUARTER, ST. CROIX USVI

DATE: 5-28-24

| NO: | REVISION: | DATE: |
|---|---|---|
| | | |

PROJECT NUMBER:
22254

DRAWING TITLE:
DISTRIBUTION

SHEET NUMBER:
E101

SHEET OF

## FIXTURE SYMBOLS

- 2x2 RECESSED LED FIXTURE
- 2X4 RECESSED LED FIXTURE
- EM — FIXTURE WITH BATTER POWER PACK
- EM — BATTERY EMERGENCY FIXTURE
- DF — EXIT FIXTURE ◄ DIRECTIONAL ARROW 'DF' DOUBLE FACE

(X) REFER TO FIXTURE SCHEDULE FOR CATALOG NUMBERS AND DETAILS. FIXTURE TYPE ARE TYPICAL FOR EACH SPACE.

## WIRING DEVICE SYMBOLS

- DUPLEX RECEPTACLE 125 VOLT 20AMP
- GROUND FAULT PROTECTED RECEPTACLE 125 VOLT 20AMP
- RECEPTACLE MOUNTED ABOVE FINISHED FLOOR +44"
- POKE-THRU SYSTEMS FURNITURE FEED
- POKE-THRU FLOOR FITTING
- SINGLE POLE SWITCH 125V 20AMP
- OCCUPANCY SENSOR – TYPE AS NOTED REFER TO LIGHTING CONTROL SCHEDULE FOR DETAILS
- CARD READER DOOR ACCESS CONTROL

## POWER + CIRCUITING SYMBOLS

- PANELBOARD – FLUSH MOUNTED
- CONCEALED CIRCUITING
- "HOMERUN" TO PANEL X–X,X,X
- FLEX CONNECTION
- POWER + 0–10 VOLT CABLE
- CAT 5e CLASS 2P CABLE

2–#12 MINIMUM – SLASHES EQUAL NUMBER OF COND–UCTORS WHEN MORE THAN TWO

- OUTLET / JUNCTION BOX
- VOICE/DATA OUTLET W/ 1" 'ER' TO HUNG CEILING SPACE AND DRAG LINE
- (X) REFER TO CONSTRUCTION NOTES
- (X) REFER TO DEMOLITION NOTE

SYMBOLS INDICATED DASHED W/ 'E' ARE EXISTING TO REMAIN, W/ 'R' EXISTING TO BE REMOVED WITH 'ER' EXISTING REINSTALLED

## FIXTURES

| TYPE | MANUFACTURER | CATALOG NUMBER | MOUNTING | LAMP DATA | WATTS | REMARKS |
|---|---|---|---|---|---|---|
| A | MAXLITE | MLFP–22 G4 18W CS CR | RECESSED | LED 3380 LUMENS | 36.0 | SEE NOTE 3+4 |
| B | MAXLITE | MLFP–24 G4 27W CS CR | RECESSED | LED 3100 LUMENS | 45.0 | SEE NOTE 3+4 |
| C | LITHONIA | LDN4SQ 35/20 L04 AR LSS TRW MV GZ10 | RECESSED | LED 2006 LUMENS | 22.5 | |
| D | MARK | S2PD (REFER TO NOTE1) | SUSPENDED | LED 1200 LUMENS | 40.0 | |
| E | LITHONIA | EXT–RW–SD | UNIVERSAL | LED | 1.5 | SEE NOTE 1 |
| F | GM LIGHTING | TGB 4 35 G2 | RECESSED | LED 2600 LUMENS | 20.0 | SEE NOTE 2 |
| G | WAC | PD 68909 T24 BN | SUSPENDED | LED 1718 LUMENS | 16.0 | |
| H | LITHONIA | ELM2LF UVOLT LTP BAA RTKIT | SURFACE | LED 220 LUMENS | 2.4 | |
| J | | | | | | |

REMARKS
1–PROVIDE DOUBLE FACE UNITS (DF) AND DIRECTIONAL ARROWS ' ' AS REQUIRED BY LIGHTING PLAN.
2–POWER SUPPLY 'TGB 4 PS 60' AND EXTENSION CORD 'TGB C EXT 12'.
3–FIXTURE WITH AN 'P' SHALL HAVE AN 'NN–RTPSW' CONTROL – FIXTURE WITH AN 'C SHALL HAVE AN 'NN–RTW' CONTROL. INDIVIDUAL FIXTURES SHALL HAVE 'CN–RTPSW CONTROL. PROVIDE 'CN–REMOTE' FOR FIXTURE PROGRAMMING AND PROVIDE MANUFACTURER'S REP FOR COMMISSIONING OF LIGHTING CONTROL SYSTEM.
4–FIXTURE WITH 'EM' SHALL BE PROVIDED MAXLITE 'EM' EMERGENCY BATTERY PACK.

L1 LIGHTING PLAN

1/4"


J. BENTON CONSTRUCTION, LLC
3000 ORANGE GROVE, CHRISTIANSTED
ST. CROIX, U.S. VIRGIN ISLANDS 00820
PHONE: (340) 718-7222 FAX: (340) 718-4778
WEBSITE: WWW.JBCVI.COM

ARCHITECT
SILVERBERG ASSOCIATES VI, P.C.
ARCHITECTS
59 COMPANY STREET, SUITE B, CHRISTIANSTED
ST. CROIX, USVI 00820
NJ PHONE: (609) 921-1861 NJ FAX: (609) 921-8326

MEP ENGINEER
T.J.D. ENGINEERING ASSOCIATES, INC.
2 Hancock Drive, West Milford, N.J. 07480
Certificate of Authorization 24GA27944000
Phone 973-208-0054
Fax 973-208-0851

STRUCTURAL ENGINEER
HARRISON HAMNETT, P.C.
40 Knowles Street
Pennington, New Jersey 08534
Office (609) 818-1808
Fax (609) 818-1809


OWNER
Tropical SHIPPING

PROFESSIONAL SEAL:

**DESIGN DEVELOPMENT NOT FOR CONSTRUCTION**

THIS DRAWING SHALL NOT BE USED FOR CONSTRUCTION UNLESS A PROFESSIONAL'S SEAL AND SIGNATURE ARE ON THE DRAWING

PROJECT TITLE / DESCRIPTION:
TROPICAL SHIPPING NEW OFFICES

FACILITY LOCATION:
TROPICAL SHIPPING L.L.C.
(LEASED PLOT)
PLOT NO. 8
EAST HOPE (H.O.V.I.C. LANDS)
QUEEN'S QUARTER, ST. CROIX USVI

DATE: 5-28-24

| NO: | REVISION: | DATE: |
|---|---|---|
| | | |

PROJECT NUMBER: 22254

DRAWING TITLE:
LIGHTING PLAN
FIXTURE SCHED

SHEET NUMBER:
E102

SHEET OF

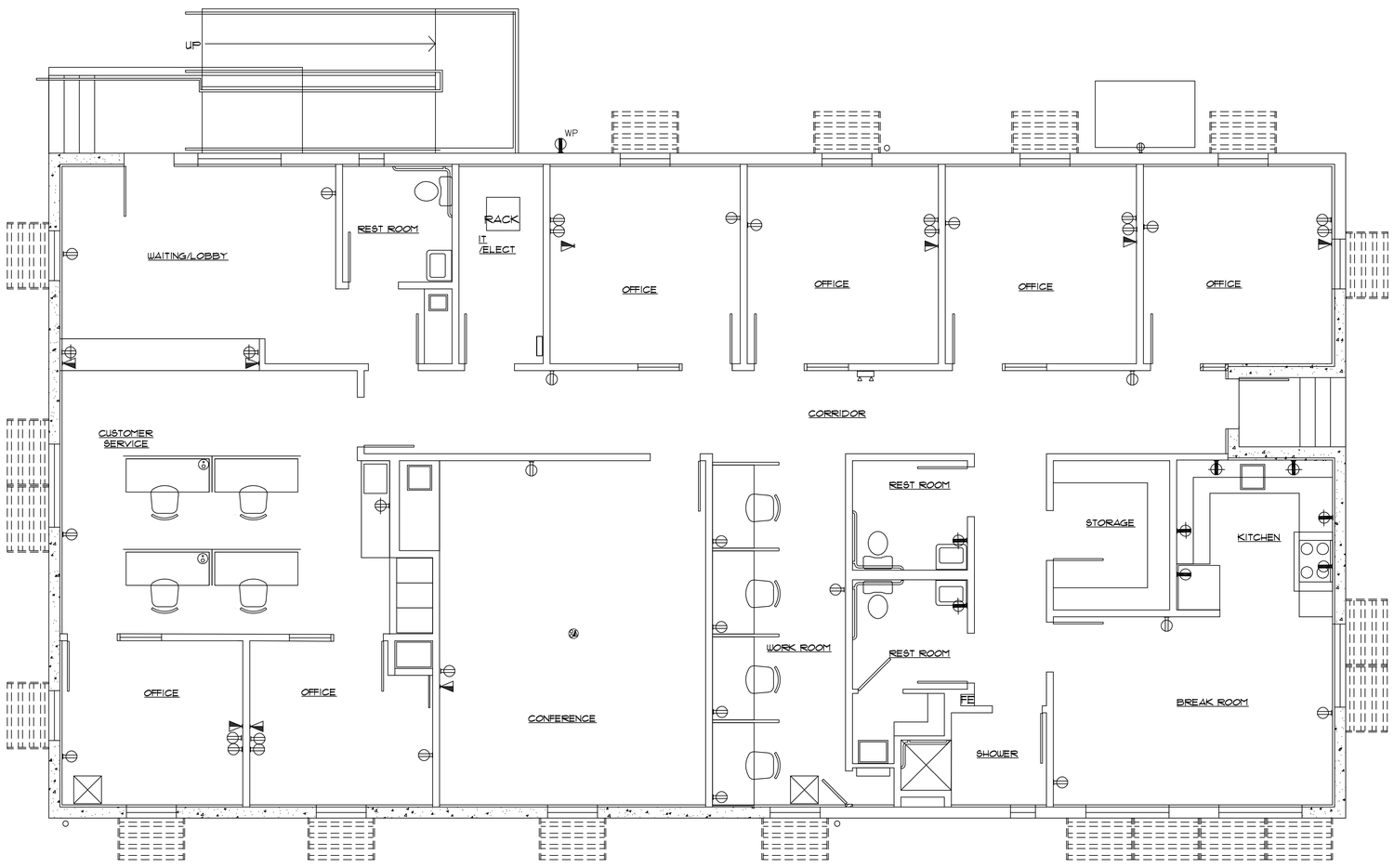


L1 POWER PLAN

1/4"

J. BENTON CONSTRUCTION, LLC
3000 ORANGE GROVE, CHRISTIANSTED
ST. CROIX, U.S. VIRGIN ISLANDS 00820
PHONE: (340) 718-7222 FAX: (340) 718-4778
WEBSITE: WWW.JBCVI.COM

ARCHITECT

SILVERBERG ASSOCIATES VI, P.C.
ARCHITECTS
59 COMPANY STREET, SUITE B, CHRISTIANSTED
ST. CROIX, USVI 00820
NJ PHONE: (609) 921-1867 NJ FAX: (609) 921-8326

MEP ENGINEER

T.J.D. ENGINEERING ASSOCIATES, INC.
2 Hancock Drive, West Milford, N.J. 07480
Certificate of Authorization 24GA27944000
Phone 973-208-0054
Fax 973-208-0851

OWNER

Tropical SHIPPING

PROFESSIONAL SEAL:

**DESIGN DEVELOPMENT NOT FOR CONSTRUCTION**

THIS DRAWING SHALL NOT BE USED FOR CONSTRUCTION UNLESS A PROFESSIONAL'S SEAL AND SIGNATURE ARE ON THE DRAWING

PROJECT TITLE / DESCRIPTION:
TROPICAL SHIPPING NEW OFFICES

FACILITY LOCATION:
TROPICAL SHIPPING L.L.C.
(LEASED PLOT)

PLOT NO. 8
EAST HOPE (H.O.V.I.C. LANDS)
QUEEN'S QUARTER, ST. CROIX USVI

DATE: 5-28-24

| NO: | REVISION: | DATE: |
|---|---|---|
| | | |

PROJECT NUMBER:
22254

DRAWING TITLE:
POWER PLAN SCHEDULES

SHEET NUMBER:
E103

SHEET OF