LBJ PUMP STATION RELOCATION

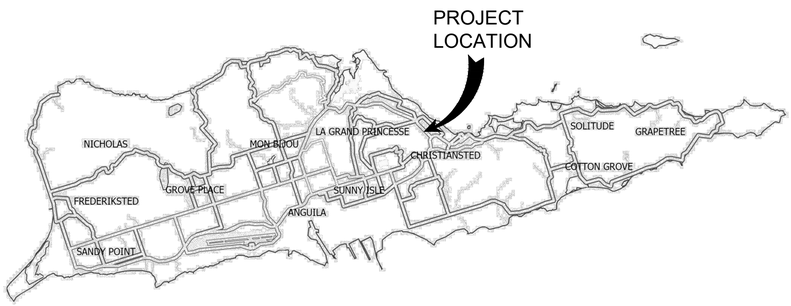

CHRISTIANSTED, ST.CROIX,
UNITED STATES VIRGIN ISLANDS

JUNE 2026

Virgin Islands Waste Management Authority
Preserving Paradise

PROJECT OWNER AND CONSULTANTS

OWNER:
VIRGIN ISLANDS WASTE MANAGEMENT AUTHORITY
7410 ESTATE BOVONI, BAY #2
ST. THOMAS, VIRGIN ISLANDS 00802
(340) 715-9100

WASTEWATER ENGINEERING CONSULTANT:
KELLY BLAKE SMITH
KIMLEY-HORN AND ASSOCIATES, INC.
12740 GRAN BAY PARKWAY WEST, SUITE 2350
JACKSONVILLE, FL 32258
(904) 828-3900

CIVIL ENGINEERING CONSULTANT:
GEORGE BALABAN
KIMLEY-HORN AND ASSOCIATES, INC.
8201 PETERS ROAD, SUITE 2200
PLANTATION, FL 33324
(954) 716-8824

STRUCTURAL ENGINEERING CONSULTANT:
JON CASEY LONG
KIMLEY-HORN AND ASSOCIATES, INC.
1920 WEKIVA WAY, SUITE 200
WEST PALM BEACH, FL 33411
(561) 840-0838

MEP CONSULTANT:
ALEXANDER ALFORD, P.E.
KIMLEY-HORN AND ASSOCIATES, INC.
10 LEA AVE, SUITE 400
NASHVILLE, TN 37210
(615) 564-2701

MEP CONSULTANT:
PETER SYNTAX, P.E.
KIMLEY-HORN AND ASSOCIATES, INC.
1661 E CAMELBACK RD, SUITE 400
PHOENIX, AZ 85016
(602) 944-5500

ELECTRICAL ENGINEERING CONSULTANT:
STEPHEN E. BAILEY
BAILEY ENGINEERING CONSULTANTS
10620 GRIFFIN ROAD, SUITE 202
COOPER CITY, FL 33328
(954) 448-7930 EXT 1204

ARCHITECT:
JENNIFER THORINGTON-HINES
EDT-THA ARCHITECTURE
8514 WHITESBURG DR
HUNTSVILLE, AL 35802
(256) 883-8496

SURVEYOR:
OASIS ENGINEERING
#59 ELIZA'S RETREAT-P.O. BOX 1699
CHRISTIANSTED, ST. CROIX, U.S.V.I. 00821
(340) 778-8747

GEOTECHNICAL ENGINEERING CONSULTANT:
OASIS CONSULTING SERVICES
45 WOODSTOCK STREET
ROSWELL, GEORGIA 30075
(678) 739-2400

DESIGN CONSULTANT	USVI LICENSE #
KELLY BLAKE SMITH	0-64744-1B
GEORGE BALABAN	0-51817-1B
JON CASEY LONG	0-10005-1B
ALEXANDER ALFORD	1952-E
PETER SYNTAX	0-63343-1B
JENNIFER THORINGTON-HINES	2027-A
STEPHEN E. BAILEY	2122-E

LOCATION MAP

N

N.T.S.

I HEREBY CERTIFY THAT THE DESIGN OF THIS PROJECT, AS PREPARED UNDER MY PERSONAL DIRECTION AND CONTROL, COMPLIES WITH ALL APPLICABLE STANDARDS, INCLUDING THE "MANUAL OF UNIFORM MINIMUM STANDARDS FOR DESIGN, CONSTRUCTION AND MAINTENANCE FOR STREETS AND HIGHWAYS" AS ADOPTED BY THE FLORIDA DEPARTMENT OF TRANSPORTATION PURSUANT TO SUBSECTIONS 335.075(1) AND (4), FLORIDA STATUTES.

KELLY B. SMITH P.E.
USVI P.E. LICENSE # 0-64744-1B

DATE: 7/14/2026

CONSTRUCTION DOCUMENTS

No.	REVISIONS	DATE	BY

Kimley»Horn
EDT Sign of Quality

PROFESSIONAL ENGINEER
KELLY B. SMITH, P.E.
0-64744-1B
U.S. VIRGIN ISLANDS

KHA PROJECT 045826000
DATE JUNE 2026
SCALE AS SHOWN
DESIGNED BY KBS
DRAWN BY MC
CHECKED BY MTS

COVER SHEET

LBJ PUMP STATION
PREPARED FOR
VIWMA

SHEET NUMBER
G-01

Plotted By:Chaturvedi, Manas Sheet Set:FEC Layout:G-01 COVER SHEET June 30, 2026 05:18:33pm K:\JAX_WaterResources\045826000 - VIWMA LBJ Sewershed\CAD\PlanSheets\G-01 COVERSHEET.dwg
This document, together with the concepts and designs presented herein, as an instrument of service, is intended only for the specific purpose and client for which it was prepared. Reuse of and improper reliance on this document without written authorization and adaptation by Kimley-Horn and Associates, Inc. shall be without liability to Kimley-Horn and Associates, Inc.

Construction Documents Sheet List Table

Sheet Number	Sheet Title
G-01	COVER SHEET
G-02	SHEET LIST TABLE
G-03	LOCATION MAP
G-04	GENERAL NOTES
G-05	EXISTING SURVEY
C-01	EXISTING CONDITIONS PLAN
C-02	EROSION CONTROL NOTES
C-03	EROSION CONTROL NOTES
C-04	PUMP STATION EROSION CONTROL & DEMOLITION PLAN
C-05	EROSION CONTROL DETAILS
C-06	PUMP STATION FENCING PLAN
C-07	SITE PLAN
C-08	PAVING GRADING & DRAINAGE PLAN
C-09	PAVING & GRADING CROSS SECTION
C-10	PAVING & GRADING CROSS SECTION
C-11	OVERALL YARD PIPING PLAN
C-12	ON-SITE WATER SERVICE PIPING PLAN
C-13	ON-SITE SANITARY AND DRAIN PIPING PLAN
C-14	CIVIL DETAILS
C-15	CIVIL DETAILS
C-16	CIVIL DETAILS
C-17	CIVIL DETAILS
L-01	LANDSCAPE PLAN
L-02	LANDSCAPE CODE TABLE
L-03	LANDSCAPE NOTES AND DETAILS
L-04	LANDSCAPE NOTES AND DETAILS
L-05	LANDSCAPE NOTES AND DETAILS
IR-01	IRRIGATION PLAN
IR-02	IRRIGATION NOTES AND DETAILS
IR-03	IRRIGATION NOTES AND DETAILS
IR-04	IRRIGATION DETAILS
A-01	ARCHITECTURAL SITE PLAN
A-02	LIFE SAFETY FLOOR PLAN
A-03	FLOOR PLAN
A-04	ROOF PLAN
A-05	FIRST FLOOR REFLECTED CEILING PLAN
A-06	EXTERIOR BUILDING ELEVATIONS
A-07	DOOR SCHEDULE, DOOR DETAILS, FINISH SCHEDULE, FINISH LEGEND
A-08	INTERIOR ELEVATIONS
MV-01	MECHANICAL NOTES AND LEGENDS
MV-02	MECHANICAL SCHEDULES AND CALCULATIONS
MV-03	MECHANICAL FLOOR PLAN
MV-04	MECHANICAL DETAILS
P-01	PLUMBING NOTES AND LEGENDS
P-02	PLUMBING SCHEDULES AND CALCULATIONS
P-03	PLUMBING FLOOR PLAN – DOMESTIC WATER
P-04	PLUMBING FLOOR PLAN – WASTE AND VENT
P-05	PLUMBING DETAILS
EB-01	BUILDING ELECTRICAL SYMBOLS
EB-02	BUILDING ELECTRICAL ABBREVIATIONS AND NOTES
EB-03	ELECTRICAL GATE SITE PLAN
EB-04	BUILDING ELECTRICAL FLOOR PLAN – POWER & LOW VOLTAGE
EB-05	BUILDING ELECTRICAL REFLECTED CEILING PLAN
EB-06	BUILDING ELECTRICAL FLOOR PLAN – FIRE ALARM
EB-07	BUILDING ELECTRICAL SCHEDULES
EB-08	BUILDING ELECTRICAL SINGLE LINE DIAGRAM
EB-09	BUILDING ELECTRICAL DETAILS
EB-10	BUILDING ELECTRICAL DETAILS
S-01	STRUCTURAL GENERAL NOTES
S-02	STRUCTURAL GENERAL NOTES
S-03	STRUCTURAL SITE PLAN
S-04	RETAINING WALL PLAN
S-05	RETAINING WALL ELEVATIONS
S-06	RETAINING WALL DETAILS
S-07	WET WELL AND INFLUENT CHANNELS OVERVIEW PLAN
S-08	WET WELL, INFLUENT CHANNELS, FOUNDATION, WALL, AND TOP PLAN
S-09	WET WELL AND INFLUENT CHANNEL SECTIONS
S-10	WET WELL AND INFLUENT CHANNEL SECTIONS
S-11	WET WELL AND INFLUENT CHANNEL SECTIONS
S-12	CISTERN PLANS
S-13	CISTERN SECTIONS
S-14	BUILDING, FOUNDATION, AND WALL PLAN
S-15	BUILDING ROOF FRAMING PLAN
S-16	BUILDING ELEVATIONS
S-17	BUILDING ELEVATIONS
S-18	BUILDING ELEVATIONS
S-19	STRUCTURAL WALL SECTIONS
S-20	STRUCTURAL WALL SECTIONS
S-21	STRUCTURAL DETAILS
S-22	STRUCTURAL DETAILS
S-23	STRUCTURAL STANDARD DETAILS
S-24	STRUCTURAL STANDARD DETAILS
S-25	STRUCTURAL STANDARD DETAILS
S-26	STRUCTURAL STANDARD DETAILS
M-01	MECHANICAL LEGEND AND ABBREVIATIONS
M-02	PUMP STATION ISOMETRIC
M-03	PUMP STATION UPPER PLAN
M-04	PUMP STATION DETAILS
M-05	INFLUENT CHANNEL SECTIONS
M-06	WET WELL AND FLOW CHANNEL SECTION
M-07	PUMP STATION SECTIONS
M-08	PUMP STATION DETAILS
M-09	PUMP STATION DETAILS
M-10	PUMP STATION DETAILS
M-11	PUMP, VALVE, GATE LEGEND
M-12	HYDRAULIC PROFILE
M-13	ODOR CONTROL DETAILS
M-14	ODOR CONTROL DETAILS
M-15	WATER SYSTEM MECHANICAL ROOM LAYOUT
M-16	WATER SYSTEM DETAILS
M-17	MECHANICAL DETAILS
M-18	MECHANICAL DETAILS
M-19	MECHANICAL DETAILS
M-20	SUBMERSIBLE PUMP DETAILS
M-21	DIESEL BYPASS PUMP DETAILS
M-22	MECHANICAL EQUIPMENT DETAILS
E-01	ELECTRICAL, NOTES, SYMBOLS, & ABBREVIATIONS
E-02	ELECTRICAL SITE PLAN
E-03	SWBD1A & SWBD1B SINGLE LINE DIAGRAM
E-04	SWBD1A & SWBD1B SINGLE LINE DIAGRAM
E-05	SWBD1A & SWBD1B SINGLE LINE DIAGRAM
E-06	LOAD TABULATIONS
E-07	PUMP STATION VFD ELEMENTARY DIAGRAM
E-08	MASTER LIFT STATION LOCAL COUNTER PANEL ELEMENTARY DIAGRAM
E-09	NETWORK & CONTROL RISER DIAGRAMS
E-10	OPERATIONS BUILDING ELECTRICAL PLAN
E-11	ENLARGED ELECTRICAL ROOM POWER PLAN
E-12	OPERATIONS BUILDING GROUNDING & LIGHTING PROTECTION PLAN
E-13	HEADWORKS & PUMP STATION ELECTRICAL PLAN
E-14	ODOR CONTROL & CISTERN WATER TREATMENT ROOM ELECTRICAL PLAN
E-15	CISTERN & TREATMENT PLANT AND MECH ROOM
E-16	GENERATORS NO.1A & 1B ELECTRICAL PLAN
E-17	PANEL SCHEDULES
E-18	LIGHTING FIXTURE SCHEDULE & DETAILS
E-19	ELECTRICAL DETAILS-1
E-20	ELECTRICAL DETAILS-2
E-21	ELECTRICAL DETAILS-3
E-22	ELECTRICAL DETAILS-4
E-23	ELECTRICAL DETAILS-5
I-01	INSTRUMENTATION NOTES SYMBOLS & ABBREVIATIONS
I-02	P&ID – INFLUENT
I-03	P&ID INFLUENT
I-04	P&ID ODOR CONTROL
I-05	POWER MONITORING
I-06	CONTROL SYSTEM DIAGRAM
I-07	RAINWATER COLLECTION AND TREATMENT SYSTEM

CONSTRUCTION DOCUMENTS

No.	REVISIONS	DATE	BY

Kimley»Horn

Sign of Quality

PROFESSIONAL ENGINEER
KELLY B. SMITH, P.E.
0-64744-1B
U.S. VIRGIN ISLANDS

KHA PROJECT 045826000
DATE JUNE 2026
SCALE AS SHOWN
DESIGNED BY KBS
DRAWN BY MC
CHECKED BY MTS

SHEET LIST TABLE

LBJ PUMP STATION
PREPARED FOR
VIWMA

SHEET NUMBER
G-02

Plotted By:Gentle, Jess Sheet Set:FEC Layout:G-02 SHEET LIST TABLE June 30, 2026 09:29:27am K:\JAX_WaterResources\045826000 – VIWMA LBJ Sewershed\CAD\PlanSheets\G-02 SHEET LIST TABLE.dwg
This document, together with the concepts and designs presented herein, as an instrument of service, is intended only for the specific purpose and client for which it was prepared. Reuse of and improper reliance on this document without written authorization and adaptation by Kimley-Horn and Associates, Inc. shall be without liability to Kimley-Horn and Associates, Inc.

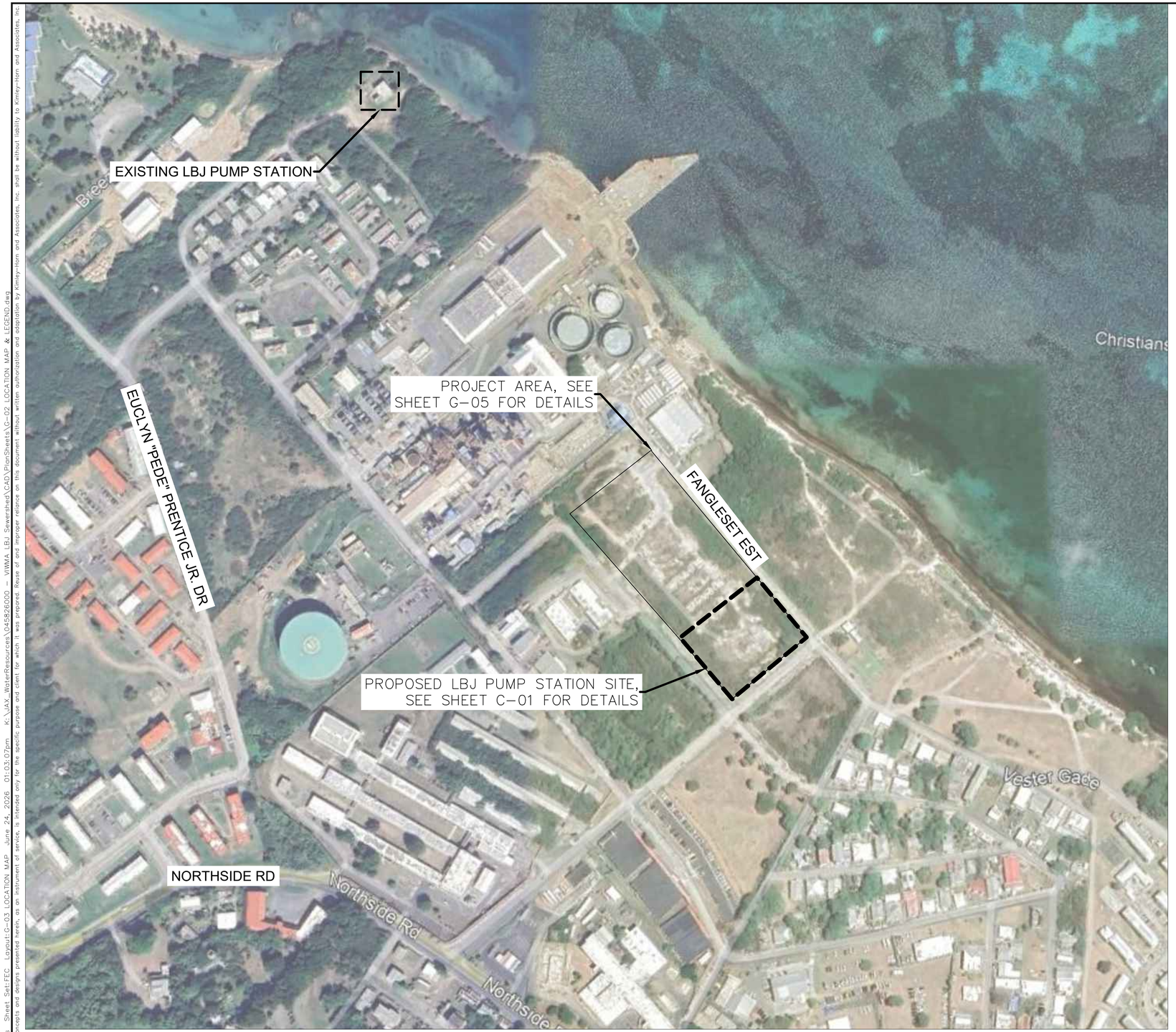

OVERALL PROJECT LOCATION

GRAPHIC SCALE IN FEET
0 250 500 1000

NORTH

STANDARD NORTH ARROW (ROTATED TO TRUE NORTH)

NORTH

GRAPHIC SCALE IN FEET
0 2' 4' 8'

GRAPHIC SCALE IN INCHES
0 1/2" 1" 2"
0 4' 8'

GRAPHIC SCALES

NOTE (TYP) — ANNOTATION, SINGLE LEADER (INDICATING TYPICAL AT MULTIPLE LOCATIONS)

NOTE — ANNOTATION, MULTIPLE LEADERS (INDICATING DISCRETE TARGETS)

TYPICAL PIPING LABEL NOMENCLATURE

8" DIP, FLG (PW)
PROCESS ABBREVIATION
JOINT TYPE
PIPE SIZE
PIPE MATERIAL

PROCESS MECHANICAL DETAIL/SECTION REFERENCES

SECTION OR DETAIL NUMBER/LETTER
A
M-02
DETAIL
SCALE: N.T.S.
DRAWING WHERE DETAIL IS REFERENCED

SECTION CUT AND DIRECTION TAIL
OPTIONAL HAT (INDICATES VIEW DIRECTION)
3
M-01
DETAIL OR SECTION NUMBER/LETTER
DRAWING WHERE DETAIL IS FOUND

DETAIL OR SECTION NUMBER/LETTER
4
M-01
DRAWING WHERE DETAIL IS FOUND
EXTENTS OF ENLARGED VIEW

CIVIL SECTION REFERENCES

SECTION CUT AND DIRECTION TAIL
A
SECTION OR DETAIL NUMBER/LETTER
A

LBJ PUMP STATION SITE DETAILS	
PARCEL NUMBER	2-049-00-0103-00
PARCEL ADDRESS	MTR 2-A PENITENTIARY LAND
PARCEL ACREAGE	3.96 ACRES
ELEVATION	10-25 FT
FEMA FLOOD ZONE	ZONE X
USGS SOILS CHARACTERIZATION	SUITABLE DRAINAGE

CONSTRUCTION DOCUMENTS

No.	REVISIONS	DATE	BY

Kimley»Horn

Sign of Quality

PROFESSIONAL ENGINEER
KELLY B. SMITH, P.E.
0-64744-1B
U.S. VIRGIN ISLANDS

KHA PROJECT 045826000
DATE JUNE 2026
SCALE AS SHOWN
DESIGNED BY KBS
DRAWN BY MC
CHECKED BY MTS

LOCATION MAP

LBJ PUMP STATION
PREPARED FOR VIWMA

SHEET NUMBER
G-03

Plotted By:Chaturvedi, Manas Sheet Set:FEC Layout:G-03 LOCATION MAP June 24, 2026 01:03:07pm K:\JAX_WaterResources\045826000 - VIWMA LBJ Sewershed\CAD\PlanSheets\G-02 LOCATION MAP & LEGEND.dwg
This document, together with the concepts and designs presented herein, as an instrument of service, is intended only for the specific purpose and client for which it was prepared. Reuse of and improper reliance on this document without written authorization and adaptation by Kimley-Horn and Associates, Inc. shall be without liability to Kimley-Horn and Associates, Inc.

GENERAL CONSTRUCTION NOTES

1. THE CONTRACTOR SHALL BE RESPONSIBLE FOR FURNISHING ALL MATERIAL AND LABOR TO CONSTRUCT THE FACILITY AS SHOWN AND DESCRIBED IN THE CONSTRUCTION DOCUMENTS IN ACCORDANCE WITH THE APPROPRIATE APPROVING AUTHORITIES, SPECIFICATIONS AND REQUIREMENTS. CONTRACTOR SHALL CLEAR AND GRUB ALL AREAS UNLESS OTHERWISE INDICATED, REMOVING TREES, STUMPS, ROOTS, MUCK, EXISTING PAVEMENT AND ALL OTHER DELETERIOUS MATERIAL. ALL COST ASSOCIATED SHALL BE INCLUDED IN THE CLEARING AND GRUBBING BID ITEM.

2. THE INFORMATION PROVIDED IN THESE PLANS IS TO ASSIST THE CONTRACTOR IN ASSESSING THE NATURE AND EXTENT OF THE CONDITIONS WHICH MAY BE ENCOUNTERED DURING THE COURSE OF THE WORK. ALL CONTRACTORS ARE DIRECTED, PRIOR TO BIDDING, TO CONDUCT ANY INVESTIGATION THEY DEEM NECESSARY TO ARRIVE AT THEIR OWN CONCLUSIONS REGARDING THE ACTUAL CONDITION THAT WILL BE ENCOUNTERED AND UPON WHICH THEIR BIDS WILL BE BASED. IT IS THE CONTRACTOR'S RESPONSIBILITY TO INVESTIGATE BOTH THE SURFACE AND SUBSURFACE CONDITIONS AND BASE HIS PRICING ACCORDINGLY. EXISTING BUILDING FOUNDATIONS AND ABANDONED LIVE UTILITIES MAY BE ENCOUNTERED.

3. EXISTING UTILITIES SHOWN ARE LOCATED ACCORDING TO THE INFORMATION AVAILABLE TO THE ENGINEER AT THE TIME OF THE TOPOGRAPHIC SURVEY AND HAVE NOT BEEN INDEPENDENTLY VERIFIED BY THE OWNER OR THE ENGINEER. GUARANTEE IS NOT MADE THAT ALL EXISTING UNDERGROUND UTILITIES ARE SHOWN OR THAT THE LOCATION OF THOSE SHOWN ARE ENTIRELY ACCURATE. FINDING THE ACTUAL LOCATION OF ANY EXISTING UTILITIES IS THE CONTRACTOR'S RESPONSIBILITY AND SHALL BE DONE BEFORE COMMENCING ANY WORK IN THE VICINITY. FURTHERMORE, THE CONTRACTOR SHALL BE FULLY RESPONSIBLE FOR ANY AND ALL DAMAGES DUE TO THE CONTRACTOR'S FAILURE TO EXACTLY LOCATE AND PRESERVE ANY AND ALL UNDERGROUND UTILITIES. THE OWNER OR ENGINEER WILL ASSUME NO LIABILITY FOR ANY DAMAGES SUSTAINED OR COST INCURRED BECAUSE OF THE OPERATIONS IN THE VICINITY OF EXISTING UTILITIES OR STRUCTURES, NOR FOR TEMPORARY BRACING AND SHORING OF SAME. IF IT IS NECESSARY TO SHORE, BRACE, SWING OR RELOCATE A UTILITY, THE UTILITY COMPANY OR DEPARTMENT AFFECTED SHALL BE CONTACTED AND THEIR PERMISSION OBTAINED REGARDING THE METHOD TO USE FOR SUCH WORK. ALL COST ASSOCIATED SHALL BE INCLUDED IN THE BID ITEM.

4. IT IS THE CONTRACTOR'S RESPONSIBILITY TO CONTACT THE VARIOUS UTILITY COMPANIES WHICH MAY HAVE BURIED OR AERIAL UTILITIES WITHIN OR NEAR THE CONSTRUCTION AREA BEFORE COMMENCING WORK. THE CONTRACTOR SHALL PROVIDE 2 BUSINESS DAYS MINIMUM NOTICE TO ALL UTILITY COMPANIES PRIOR TO BEGINNING CONSTRUCTION.

5. THE CONTRACTOR SHALL BE RESPONSIBLE FOR OBTAINING ALL REQUIRED CONSTRUCTION PERMITS AND BONDS IF REQUIRED PRIOR TO CONSTRUCTION.

6. THE CONTRACTOR SHALL HAVE AVAILABLE AT THE JOB SITE AT ALL TIMES ONE COPY OF THE CONSTRUCTION DOCUMENTS INCLUDING PLANS, SPECIFICATIONS, AND SPECIAL CONDITIONS AND COPIES OF ANY REQUIRED CONSTRUCTION PERMITS.

7. ANY DISCREPANCIES ON THE DRAWINGS SHALL BE IMMEDIATELY BROUGHT TO THE ATTENTION OF THE OWNER AND ENGINEER BEFORE COMMENCING WORK. NO FIELD CHANGES OR DEVIATIONS FROM DESIGN ARE TO BE MADE WITHOUT PRIOR APPROVAL OF THE OWNER AND NOTIFICATION TO THE ENGINEER.

8. ALL COPIES OF COMPACTION, CONCRETE AND OTHER REQUIRED TEST RESULTS ARE TO BE SENT TO THE OWNER AND DESIGN ENGINEER OF RECORD DIRECTLY FROM THE TESTING AGENCY.

9. THE CONTRACTOR SHALL BE RESPONSIBLE FOR SUBMITTING TO THE ENGINEER A CERTIFIED RECORD SURVEY SIGNED AND SEALED BY A PROFESSIONAL LAND SURVEYOR REGISTERED IN THE US VIRGIN ISLANDS DEPICTING THE ACTUAL FIELD LOCATION OF ALL CONSTRUCTED IMPROVEMENTS THAT ARE REQUIRED BY THE JURISDICTIONAL AGENCIES FOR THE CERTIFICATION PROCESS. ALL SURVEY COSTS WILL BE THE CONTRACTORS RESPONSIBILITY. THE CONTRACTOR SHALL SUBMIT 1 PDF COPY AND 1 ELECTRONIC COPY IN AUTOCAD 2018 OR LATER, BOTH PREPARED BY A US VIRGIN ISLANDS REGISTERED SURVEYOR. THE RECORD SURVEY SHALL VERIFY ALL DESIGN INFORMATION INCLUDED ON THE DESIGN PLANS OF THE SAME NAME.

10. ANY WELLS DISCOVERED ON SITE THAT WILL HAVE NO USE MUST BE PLUGGED BY A LICENSED WELL DRILLING CONTRACTOR IN A MANNER APPROVED BY ALL JURISDICTIONAL AGENCIES. CONTRACTOR SHALL BE RESPONSIBLE FOR OBTAINING ANY WELL ABANDONMENT PERMITS REQUIRED.

11. ANY WELL DISCOVERED DURING EARTH MOVING OR EXCAVATION SHALL BE REPORTED TO THE APPROPRIATE JURISDICTIONAL AGENCIES WITHIN 24 HOURS AFTER DISCOVERY IS MADE.

12. ANY WELL TO REMAIN SHALL BE ADJUSTED TO GRADE BY THE CONTRACTOR.

13. IT IS THE CONTRACTOR'S RESPONSIBILITY TO COORDINATE THE MAINTENANCE OF TRAFFIC FOR THE ADJACENT PROPERTIES DURING CONSTRUCTION.

14. THE CONTRACTOR SHALL BE RESPONSIBLE FOR VERIFYING THAT THE PROPOSED IMPROVEMENTS SHOWN ON THE PLANS DO NOT CONFLICT WITH ANY KNOWN EXISTING OR OTHER PROPOSED IMPROVEMENTS. IF ANY CONFLICTS ARE DISCOVERED, THE CONTRACTOR SHALL NOTIFY THE OWNER PRIOR TO INSTALLATION OF ANY PORTION OF THE SITE WORK THAT WOULD BE AFFECTED. FAILURE TO NOTIFY OWNER OF AN IDENTIFIABLE CONFLICT PRIOR TO PROCEEDING WITH INSTALLATION RELIEVES OWNER OF ANY OBLIGATION TO PAY FOR A RELATED CHANGE ORDER.

15. PRIOR TO GRAND OPENING THE CONTRACTOR SHALL:
    - SWEEP THE ENTIRE SITE
    - ELIMINATE ALL DEBRIS IN THE LANDSCAPING AREAS
    - PRESSURE CLEAN THE SITE ASPHALT AND CONCRETE
    - PRESSURE CLEAN THE CURBS AND SIDEWALKS

RECORD DRAWINGS

1. CONTRACTOR SHALL PROVIDE TO THE ENGINEER AND OWNER A MINIMUM OF ONE PDF COPY AND ONE ELECTRONIC COPY OF A PAVING, GRADING AND DRAINAGE RECORD DRAWING AND A SEPARATE UTILITY RECORD DRAWING, AS WELL AS BOTH IN AUTOCAD 2018 OR LATER, BOTH PREPARED BY A US VIRGIN ISLANDS REGISTERED SURVEYOR. THE RECORD DRAWINGS SHALL VERIFY ALL DESIGN INFORMATION INCLUDED ON THE DESIGN PLANS OF THE SAME NAME.

PAVING, GRADING AND DRAINAGE NOTES

1. ALL PAVING, CONSTRUCTION, MATERIALS, AND WORKMANSHIP WITHIN JURISDICTION'S RIGHT-OF-WAY SHALL BE IN ACCORDANCE WITH LOCAL SPECIFICATIONS AND STANDARDS (LATEST EDITION) OR STANDARD SPECIFICATIONS FOR CONSTRUCTION OF ROADS AND BRIDGES ON FEDERAL HIGHWAY PROJECTS AND STANDARDS (LATEST EDITION) IF NOT COVERED BY LOCAL REGULATIONS.

2. ALL UNPAVED AREAS IN EXISTING RIGHTS-OF-WAY DISTURBED BY CONSTRUCTION SHALL BE REGRADED AND SODDED.

3. TRAFFIC CONTROL ON ALL LOCAL AND TERRITORY RIGHTS-OF-WAY SHALL MEET THE REQUIREMENTS OF THE MANUAL OF UNIFORM TRAFFIC CONTROL DEVICES (U.S. DOT/FHWA) AND THE REQUIREMENTS OF THE VIRGIN ISLANDS AND ANY LOCAL AGENCY HAVING JURISDICTION. IN THE EVENT THAT THE CONTRACT DOCUMENTS AND THE JURISDICTIONAL AGENCY REQUIREMENTS ARE NOT IN AGREEMENT, THE MOST STRINGENT SHALL GOVERN.

4. THE CONTRACTOR SHALL GRADE THE SITE TO THE ELEVATIONS INDICATED AND SHALL REGRADE WASHOUTS WHERE THEY OCCUR AFTER EVERY RAINFALL UNTIL A GRASS STAND IS WELL ESTABLISHED OR ADEQUATE STABILIZATION OCCURS.

5. ALL OPEN AREAS WITHIN THE PROJECT SITE SHALL BE SODDED UNLESS INDICATED OTHERWISE.

6. ALL AREAS INDICATED AS PAVEMENT SHALL BE CONSTRUCTED IN ACCORDANCE WITH THE TYPICAL SECTIONS AS INDICATED ON THE DRAWINGS.

7. WHERE EXISTING PAVEMENT IS INDICATED TO BE REMOVED AND REPLACED, THE CONTRACTOR SHALL PROVIDE A SMOOTH AND STRAIGHT JOINT AND REPLACE THE PAVEMENT WITH THE SAME TYPE AND DEPTH OF MATERIAL AS EXISTING OR WITH A MINIMUM THICKNESS OF 5".

8. WHERE NEW PAVEMENT MEETS THE EXISTING PAVEMENT, THE CONTRACTOR SHALL PROVIDE A SMOOTH AND STRAIGHT JOINT AND MATCH THE EXISTING PAVEMENT ELEVATION WITH THE PROPOSED PAVEMENT UNLESS OTHERWISE INDICATED.

9. THE CONTRACTOR SHALL INSTALL FILTER FABRIC OVER ALL DRAINAGE STRUCTURES FOR THE DURATION OF CONSTRUCTION AND UNTIL ACCEPTANCE OF THE PROJECT BY THE OWNER. ALL DRAINAGE STRUCTURES SHALL BE CLEANED OF DEBRIS AS REQUIRED DURING AND AT THE END OF CONSTRUCTION TO PROVIDE POSITIVE DRAINAGE FLOWS.

10. IF DEWATERING IS REQUIRED, THE CONTRACTOR SHALL OBTAIN ANY APPLICABLE REQUIRED PERMITS. THE CONTRACTOR IS TO COORDINATE WITH THE OWNER AND THE DESIGN ENGINEER PRIOR TO ANY EXCAVATION.

11. STRIP TOPSOIL AND ORGANIC MATTER FROM ALL AREAS OF THE SITE AS REQUIRED. IN SOME CASES TOPSOIL MAY BE STOCKPILED ON SITE FOR PLACEMENT WITHIN LANDSCAPED AREAS BUT ONLY AS DIRECTED BY THE OWNER. WHEN DISPOSAL IS REQUIRED, THE CONTRACTOR SHALL INCLUDE ITS PRICE IN THE BID ITEM.

12. FIELD DENSITY TESTS SHALL BE TAKEN AT INTERVALS IN ACCORDANCE WITH THE LOCAL JURISDICTIONAL AGENCY OR TO STANDARD SPECIFICATIONS FOR CONSTRUCTION OF ROADS AND BRIDGES ON FEDERAL HIGHWAY PROJECTS STANDARDS. IN THE EVENT THAT THE CONTRACT DOCUMENTS AND THE JURISDICTIONAL AGENCY REQUIREMENTS ARE NOT IN AGREEMENT, THE MOST STRINGENT SHALL GOVERN.

13. ALL SLOPES AND AREAS DISTURBED BY CONSTRUCTION SHALL BE GRADED AS PER PLANS. THE AREAS SHALL THEN BE SODDED OR SEEDED AS SPECIFIED IN THE PLANS, FERTILIZED, MULCHED, WATERED AND MAINTAINED UNTIL HARDY GRASS GROWTH IS ESTABLISHED IN ALL AREAS. ANY AREAS DISTURBED FOR ANY REASON PRIOR TO FINAL ACCEPTANCE OF THE JOB SHALL BE CORRECTED BY THE CONTRACTOR AT NO ADDITIONAL COST TO THE OWNER. ALL EARTHEN AREAS WILL BE SODDED OR SEEDED AND MULCHED AS SHOWN ON THE LANDSCAPING PLAN.

14. ALL CUT OR FILL SLOPES SHALL BE 4 (HORIZONTAL) :1 (VERTICAL) OR FLATTER UNLESS OTHERWISE SHOWN.

15. THE CONTRACTOR SHALL BE RESPONSIBLE FOR THE CONTROL OF DUST AND DIRT RISING AND SCATTERING IN THE AIR DURING CONSTRUCTION AND SHALL PROVIDE WATER SPRINKLING OR OTHER SUITABLE METHODS OF CONTROL. THE CONTRACTOR SHALL COMPLY WITH ALL GOVERNING REGULATIONS PERTAINING TO ENVIRONMENTAL PROTECTION. THE CONTRACTOR SHALL NOTIFY ADJACENT RESIDENTS PRIOR TO CONSTRUCTION.

16. THE CONTRACTOR SHALL TAKE ALL REQUIRED MEASURES TO CONTROL TURBIDITY, INCLUDING BUT NOT LIMITED TO THE INSTALLATION OF TURBIDITY BARRIERS AT ALL LOCATIONS WHERE THE POSSIBILITY OF TRANSFERRING SUSPENDED SOLIDS INTO THE RECEIVING WATER BODY EXISTS DUE TO THE PROPOSED WORK. TURBIDITY BARRIERS MUST BE MAINTAINED IN EFFECTIVE CONDITION AT ALL LOCATIONS UNTIL CONSTRUCTION IS COMPLETED AND DISTURBED SOIL AREAS ARE STABILIZED. THEREAFTER, THE CONTRACTOR MUST REMOVE THE BARRIERS. ALL COSTS ASSOCIATED SHALL BE INCLUDED IN THE EROSION CONTROL BID ITEM.

17. SOD, WHERE CALLED FOR, MUST BE INSTALLED AND MAINTAINED ON EXPOSED SLOPES WITHIN 48 HOURS OF COMPLETING FINAL GRADING, AND AT ANY OTHER TIME AS NECESSARY, TO PREVENT EROSION, SEDIMENTATION OR TURBID DISCHARGES.

18. THE CONTRACTOR MUST REVIEW AND MAINTAIN A COPY OF THE ENVIRONMENTAL PERMIT COMPLETE WITH ALL CONDITIONS, ATTACHMENTS, EXHIBITS, AND PERMIT MODIFICATIONS IN GOOD CONDITION AT THE CONSTRUCTION SITE. THE COMPLETE PERMIT MUST BE AVAILABLE FOR REVIEW UPON REQUEST.

19. THE CONTRACTOR SHALL ENSURE THAT ISLAND PLANTING AREAS AND OTHER PLANTING AREAS ARE NOT COMPACTED AND DO NOT CONTAIN ROAD BASE MATERIALS. THE CONTRACTOR SHALL ALSO EXCAVATE AND REMOVE ALL UNDESIRABLE MATERIAL FROM ALL AREAS ON THE SITE TO BE PLANTED AND PROPERLY DISPOSED OF IN A LEGAL MANNER.

20. THE CONTRACTOR SHALL INSTALL ALL UNDERGROUND STORM WATER PIPING PER MANUFACTURER'S RECOMMENDATIONS.

DEMOLITION NOTES

1. ALL MATERIAL REMOVED FROM THIS SITE BY THE CONTRACTOR SHALL BE DISPOSED OF BY THE CONTRACTOR IN A LEGAL MANNER.

2. REFER TO THE TOPOGRAPHIC SURVEY FOR ADDITIONAL DETAILS OF EXISTING STRUCTURES, ETC., LOCATED WITHIN THE PROJECT SITE. UNLESS OTHERWISE NOTED, ALL EXISTING BUILDINGS, STRUCTURES, SLABS, CONCRETE, ASPHALT, DEBRIS PILES, SIGNS, AND ALL APPURTENANCES ARE TO BE REMOVED FROM THE SITE BY THE CONTRACTOR AND PROPERLY DISPOSED OF IN A LEGAL MANNER AS PART OF THIS CONTRACT. SOME ITEMS TO BE REMOVED MAY NOT BE DEPICTED ON THE TOPOGRAPHIC SURVEY. IT IS THE CONTRACTOR'S RESPONSIBILITY TO VISIT THE SITE AND DETERMINE THE FULL EXTENT OF ITEMS TO BE REMOVED. IF ANY ITEMS ARE IN QUESTION, THE CONTRACTOR SHALL CONTACT THE OWNER PRIOR TO REMOVAL OF SAID ITEMS. CONTRACTOR SHALL OBTAIN MISSING SURVEY INFORMATION AND PROVIDE TO ENGINEER FOR CONCURRENCE.

3. THE CONTRACTOR SHALL REFER TO THE DEMOLITION PLAN FOR DEMOLITION/PRESERVATION OF EXISTING TREES. ALL TREES NOT SPECIFICALLY SHOWN TO BE PRESERVED OR RELOCATED SHALL BE REMOVED AS A PART OF THIS CONTRACT. TREE PROTECTION FENCING SHALL BE INSTALLED PRIOR TO ANY DEMOLITION.

4. CONTRACTOR SHALL ADJUST THE ELEVATIONS OF ANY EXISTING UTILITIES OR DRAINAGE STRUCTURES TO REMAIN.

WATER AND SEWER UTILITY NOTES

1. THE CONTRACTOR SHALL CONSTRUCT GRAVITY SEWER LATERALS, MANHOLES, GRAVITY SEWER LINES, PRESSURE SEWER LINES, AND DOMESTIC WATER AND FIRE PROTECTION SYSTEM AS SHOWN ON THESE PLANS. THE CONTRACTOR SHALL FURNISH ALL NECESSARY MATERIALS, EQUIPMENT, MACHINERY, TOOLS, MEANS OF TRANSPORTATION AND LABOR NECESSARY TO COMPLETE THE WORK IN FULL AND COMPLETE ACCORDANCE WITH THE SHOWN, DESCRIBED AND REASONABLY INTENDED REQUIREMENTS OF THE CONTRACT DOCUMENTS AND JURISDICTIONAL AGENCY REQUIREMENTS. IN THE EVENT THAT THE CONTRACT DOCUMENTS AND THE JURISDICTIONAL AGENCY REQUIREMENTS ARE NOT IN AGREEMENT, THE MOST STRINGENT SHALL GOVERN.

2. ALL EXISTING UNDERGROUND UTILITY LOCATIONS SHOWN ARE APPROXIMATE THE CONTRACTOR SHALL COMPLY WITH ALL REQUIREMENTS FOR UTILITY LOCATION AND COORDINATION IN ACCORDANCE WITH THE NOTES CONTAINED IN THE GENERAL CONSTRUCTION SECTION OF THIS SHEET.

3. THE CONTRACTOR SHALL RESTORE ALL DISTURBED VEGETATION IN KIND, UNLESS SHOWN OTHERWISE.

4. DEFLECTION OF PIPE JOINTS AND CURVATURE OF PIPE SHALL NOT EXCEED 75% OF THE MAXIMUM DEFLECTION AS RECOMMENDED BY MANUFACTURER'S SPECIFICATIONS. SECURELY CLOSE ALL OPEN ENDS OF PIPE AND FITTINGS WITH A WATERTIGHT PLUG WHEN WORK IS NOT IN PROGRESS. THE INTERIOR OF ALL PIPES SHALL BE CLEAN AND JOINT SURFACES WIPED CLEAN AND DRY AFTER THE PIPE HAS BEEN LOWERED INTO THE TRENCH. VALVES SHALL BE PLUMB AND LOCATED ACCORDING TO THE PLANS.

5. ALL PHASES OF INSTALLATION, INCLUDING UNLOADING, TRENCHING, LAYING AND BACK FILLING, SHALL BE DONE IN A FIRST CLASS WORKMANLIKE MANNER. ALL PIPE AND FITTINGS SHALL BE CAREFULLY STORED FOLLOWING MANUFACTURER'S RECOMMENDATIONS. ALL PLASTIC PIPES STORED OVER 30 DAYS MUST BE UV PROTECTED. CARE SHALL BE TAKEN TO AVOID DAMAGE TO THE COATING OR LINING IN ANY D.I. PIPE FITTINGS. ANY PIPE OR FITTING WHICH IS DAMAGED OR WHICH HAS FLAWS OR IMPERFECTIONS WHICH, IN THE OPINION OF THE ENGINEER OR OWNER, RENDERS IT UNFIT FOR USE, SHALL NOT BE USED. ANY PIPE NOT SATISFACTORY FOR USE SHALL BE CLEARLY MARKED AND IMMEDIATELY REMOVED FROM THE JOB SITE, AND SHALL BE REPLACED AT THE CONTRACTOR'S EXPENSE.

6. ALL UTILITY AND STORM DRAIN TRENCHES LOCATED UNDER AREAS TO RECEIVE PAVING SHALL BE COMPLETELY BACK FILLED IN ACCORDANCE WITH THE GOVERNING JURISDICTIONAL AGENCY'S SPECIFICATIONS. IN THE EVENT THAT THE CONTRACT DOCUMENTS AND THE JURISDICTIONAL AGENCY REQUIREMENTS ARE NOT IN AGREEMENT, THE MOST STRINGENT SHALL GOVERN.

7. UNDERGROUND LINES SHALL BE SURVEYED BY A US VIRGIN ISLANDS PROFESSIONAL LAND SURVEYOR PRIOR TO BACK FILLING.

8. CONTRACTOR SHALL PERFORM, AT HIS OWN EXPENSE, ANY AND ALL TESTS REQUIRED BY THE SPECIFICATIONS AND/OR ANY AGENCY HAVING JURISDICTION. THESE TESTS MAY INCLUDE, BUT MAY NOT BE LIMITED TO, INFILTRATION AND EXFILTRATION, VIDEO INSPECTION AND A MANDREL TEST ON GRAVITY SEWER. A COPY OF THE TEST RESULTS SHALL BE PROVIDED TO THE UTILITY PROVIDER, OWNER AND JURISDICTIONAL AGENCY AS REQUIRED.

9. ALL PVC PIPE SHALL BE INSTALLED IN ACCORDANCE WITH THE UNI-VELL PLASTIC PIPE ASSOCIATIONS "GUIDE FOR INSTALLATION OF PVC PRESSURE PIPE FOR MUNICIPAL WATER DISTRIBUTION SYSTEM"

10. ALL DIP SHALL BE INSTALLED IN ACCORDANCE WITH ANSI/AWWA C600-05 OR LATEST REVISION.

11. ALL WATER MAIN PIPES SHALL BE COLOR CODED USING BLUE AS A PREDOMINANT COLOR. ALL SEWER MAIN PIPES SHALL BE COLOR CODED USING GREEN AS A PREDOMINANT COLOR.

12. ALL WATER MAINS SHALL BE LAID WITH A MINIMUM 36" COVER FOR PVC AND 30" FOR DIP.

13. NO CONNECTIONS TO EXISTING LINES SHALL BE MADE UNTIL PRESSURE TESTS & BACTERIOLOGICAL TESTS HAVE BEEN PERFORMED AND THE SYSTEM IS ACCEPTABLE TO THE US VIRGIN ISLANDS WATER AND POWER AUTHORITY.

14. LOCATOR TAPE AND WIRE SHALL BE INSTALLED ON ALL NEW WATER AND SEWER MAINS. TAPE WILL BE 3" WIDE AND COLOR CODED AND INSTALLED 12" ABOVE WATER/SEWER MAINS. WIRE WILL BE 14 STRAND AND COLOR CODED. TRACER WIRES SHALL BE TESTED PRIOR TO BURY AND TEST STATIONS SHALL BE INCLUDED IN AS-BUILTS.

15. R.P.M.'S TO BE INSTALLED PRIOR TO C/O AT CENTER OF NEAREST DRIVE AISLE ADJACENT TO ALL HYDRANTS (BLUE). FOR HYDRANTS AT CORNERS, TWO (2) R.P.M.'S SHALL BE INSTALLED, ONE AT EACH ROADWAY.

GRAVITY SEWAGE COLLECTION SYSTEM MATERIAL

1. ALL SEWER PIPE AND FITTINGS SHALL BE NON-PRESSURE POLYVINYL CHLORIDE PIPE (PVC) CONFORMING TO ASTM D 3034, SDR 26, WITH PUSH-ON RUBBER GASKET JOINTS.

2. ALL FITTINGS AND ACCESSORIES SHALL BE AS MANUFACTURED OR SUPPLIED BY THE PIPE MANUFACTURER OR EQUAL.

3. WHERE DIP IS REQUIRED, IT SHALL BE CLASS 51 WALL THICKNESS WITH INTERIOR POLY LINING AND EXTERIOR COAT FOR COATING CONFORMING TO ANSI/AWWA C151/A21.51-91.

MANHOLES

1. MANHOLES SHALL BE PRECAST PER ASTM C 478 WITH 4000 PSI CONCRETE AND GRADE 40 STEEL.

2. ALL SANITARY SEWER MANHOLES SHALL HAVE RAIN INSERT COVERS.

PAVEMENT MARKINGS NOTES:

1. CONTRACTOR TO APPLY TWO COATS OF VOC COMPLIANT, PUBLIC WORKS APPROVED, UNDILUTED, SOLVENT BASED OR LATEX TRAFFIC PAINT. CONTRACTOR TO FOLLOW MANUFACTURER'S RECOMMENDED APPLICATION RATE WITHOUT THE ADDITION OF A THINNER, WITH A MAXIMUM OF 100 SQUARE FEET PER GALLON OR AS REQUIRED PROVIDING MINIMUM 15 MILS WET FILM THICKNESS AND 7.5 MILS DRY FILM THICKNESS PER COAT WITH MINIMUM OF 30 DAYS BETWEEN APPLICATIONS. SECOND COAT OF PAINT SHALL NOT BE APPLIED EARLIER THAN 7 DAYS PRIOR TO GRAND OPENING. PAINT SHALL BE CRISP, STRAIGHT AND APPLIED UNIFORMLY ACROSS THE WIDTH OF A LINE FOR A TOTAL DRY FILM THICKNESS OF 15 MILS.

2. ALL PAVEMENT SYMBOLS AND MARKINGS SHALL BE THERMOPLASTIC WITH THE EXCEPTION OF PARKING STRIPING.

CONSTRUCTION DOCUMENTS

No.	REVISIONS	DATE	BY

Kimley»Horn

EDT Sign of Quality

PROFESSIONAL ENGINEER
KELLY B. SMITH, P.E.
0-64744-1B
U.S. VIRGIN ISLANDS

KHA PROJECT	045826000
DATE	JUNE 2026
SCALE	AS SHOWN
DESIGNED BY	KBS
DRAWN BY	MC
CHECKED BY	MTS

GENERAL NOTES

LBJ PUMP STATION
PREPARED FOR
VIWMA

SHEET NUMBER
G-04

Plotted By:Chaturvedi, Manas Sheet Set:FEC Layout:G-04 GENERAL NOTES June 24, 2026 01:03:16pm K:\VIX_WaterResources\045826000 - VIWMA LBJ Sewershed\CAD\PlanSheets\G-03 GENERAL NOTES & LEGEND.dwg
This document, together with the concepts and designs presented herein, as an instrument of service, is intended only for the specific purpose and client for which it was prepared. Reuse of and improper reliance on this document without written authorization and adaptation by Kimley-Horn and Associates, Inc. shall be without liability to Kimley-Horn and Associates, Inc.

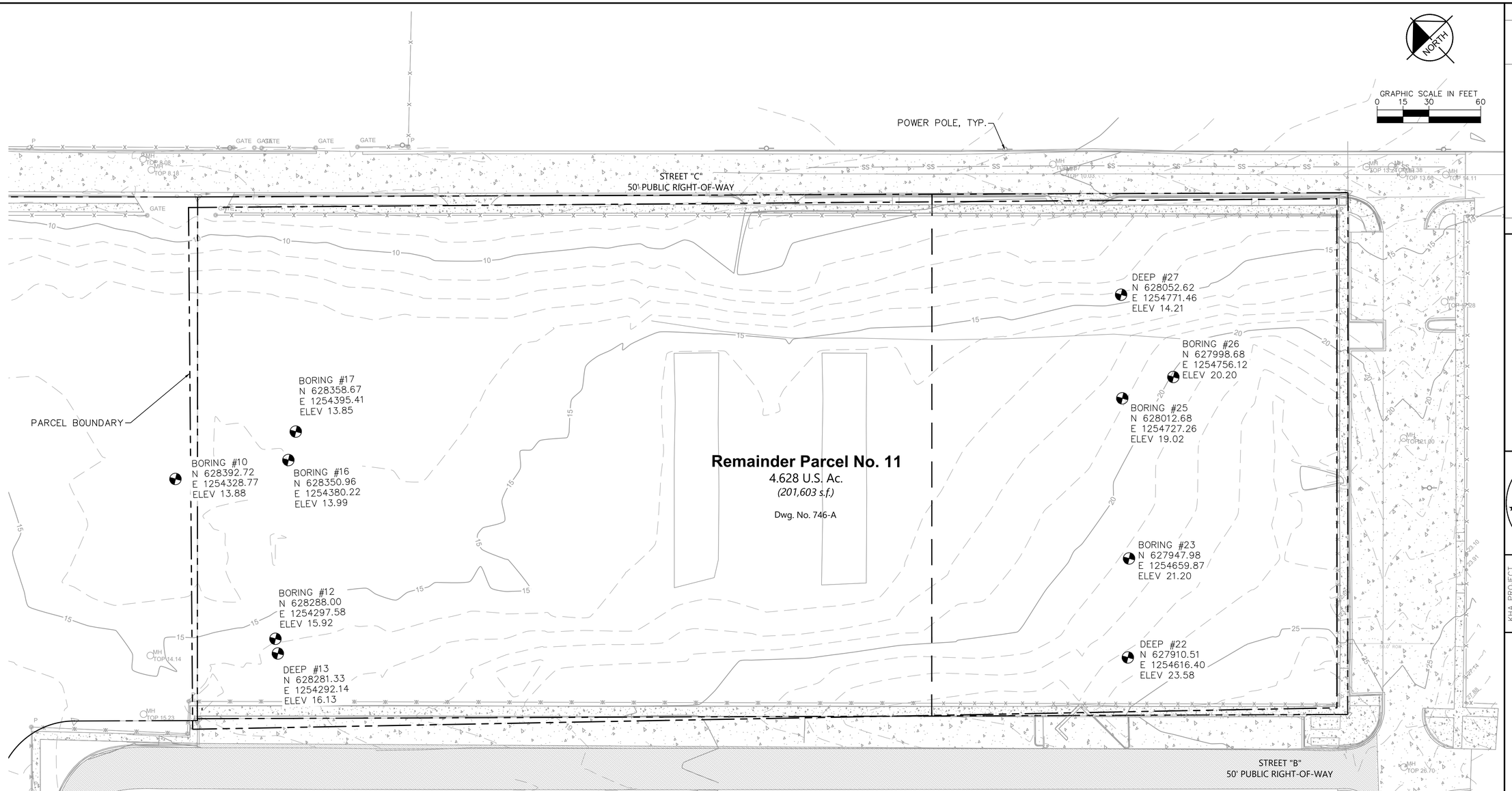

LEGEND

- PROPERTY LINE/RIGHT-OF-WAY
- LIMIT OF PROJECT AREA
- EXIST CONCRETE PAVEMENT
- EXIST ASPHALT PAVEMENT
- EXIST CHAIN LINK FENCE
- EXIST SEWER LINE
- EXIST MANHOLE
- EXIST ELECTRICAL POLE
- EXIST POST
- EXIST BORING LOCATION

NOTES:

1) SURVEY PROVIDED BY OASIS ENGINEERING, LLC, DATED FEBRUARY 4, 2024. COORDINATES SHOWN HEREIN ARE IN US SURVEY FEET AND ARE REFERENCED TO THE PUERTO RICO AND VIRGIN ISLANDS, NORTH AMERICAN DATUM OF 1983/2011 ADJUSTMENT.
2) SEE GEOTECHNICAL REPORT PROVIDED BY VITEST ENGINEERS, LLC DATED JANUARY 2025 FOR FURTHER GEOTECHNICAL DETAILS.
3) CONTRACTOR SHALL FIELD VERIFY EXISTING CONDITIONS PRIOR TO BEGINNING CONSTRUCTION AND ORDERING EQUIPMENT. CONTRACTOR SHALL NOTIFY ENGINEER OF DISCREPANCIES.
4) CONTRACTOR SHALL SUBMIT A CONSTRUCTION SEQUENCE SCHEDULE AS PART OF THEIR SUBMITTALS FOR REVIEW AND APPROVAL FROM OWNER/ENGINEER TO MINIMIZE FLOW INTERRUPTIONS.

CONSTRUCTION DOCUMENTS

No.	REVISIONS	DATE	BY

Kimley»Horn

EDT Sign of Quality

PROFESSIONAL ENGINEER
KELLY B. SMITH, P.E.
0-64744-1B
U.S. VIRGIN ISLANDS

KHA PROJECT 045826000
DATE JUNE 2026
SCALE AS SHOWN
DESIGNED BY KBS
DRAWN BY MC
CHECKED BY MTS

EXISTING SURVEY

LBJ PUMP STATION
PREPARED FOR
VIWMA

SHEET NUMBER
G-05

Plotted By:Chaturvedi, Manas Sheet Set:FEC Layout:G-05 EXISTING SURVEY June 24, 2026 01:12:12pm K:\JAX_WaterResources\045826000 - VIWMA LBJ Sewershed\CAD\PlanSheets\G-03 EXISTING SURVEY.dwg
This document, together with the concepts and designs presented herein, as an instrument of service, is intended only for the specific purpose and client for which it was prepared. Reuse of and improper reliance on this document without written authorization and adaptation by Kimley-Horn and Associates, Inc. shall be without liability to Kimley-Horn and Associates, Inc.

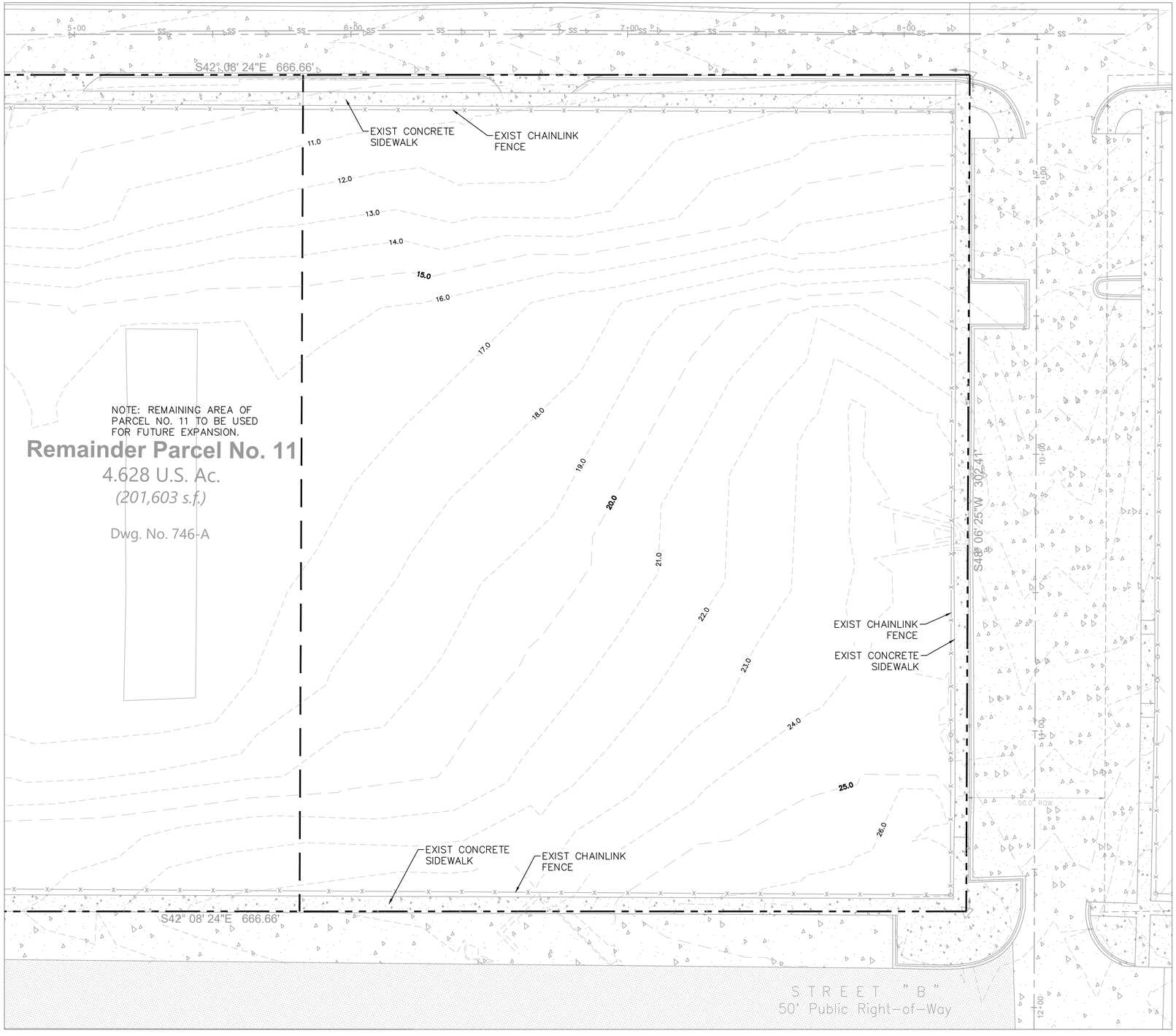

GRAPHIC SCALE IN FEET
0 10 20 40

NORTH

LEGEND

- PROPERTY LINE/RIGHT-OF-WAY
- LIMIT OF PROJECT AREA
- EXIST CONCRETE PAVEMENT
- EXIST ASPHALT PAVEMENT
- EXIST CHAIN LINK FENCE
- EXIST SEWER LINE
- EXIST MANHOLE (MH TOP 14.11)
- EXIST ELECTRICAL POLE
- EXIST POST (P)

NOTES:

1. SEE GEOTECHNICAL INVESTIGATION REPORT PROVIDED BY VITEST ENGINEERS, LLC DATED JANUARY 2025 FOR FURTHER GEOTECHNICAL DETAILS

CONSTRUCTION DOCUMENTS

No.	REVISIONS	DATE	BY

Kimley»Horn

PROFESSIONAL ENGINEER
GEORGE BALABAN, P.E.
0-51817-1B
U.S. VIRGIN ISLANDS
07/09/2026

KHA PROJECT 045826000
DATE JUNE 2026
SCALE AS SHOWN
DESIGNED BY GB
DRAWN BY JB
CHECKED BY MB

EXISTING CONDITIONS PLAN

LBJ PUMP STATION
PREPARED FOR VIWMA

SHEET NUMBER
C-01

Plotted By:Chaturvedi, Manas Sheet Set:FEC Layout:C-01 EXISTING CONDITIONS PLAN June 29, 2026 03:59:38pm K:\FTL_Civil\045 Jobs\045826000 LBJ Pump Station\Design\CADD\PlanSheets\C-01 EXISTING CONDITIONS PLAN.dwg

BEST MANAGEMENT PRACTICES (BMPS):

THE PLAN ADDRESSES THE FOLLOWING:

1. PREVENT LOSS OF SOIL DURING CONSTRUCTION BY STORMWATER RUNOFF AND/OR WIND EROSION, INCLUDING PROTECTING TOPSOIL BY STOCKPILING FOR REUSE.

2. SEDIMENTATION PROTECTION OF STORM SEWER OR RECEIVING STREAM.

3. PREVENT POLLUTING THE AIR WITH DUST AND PARTICULATE MATTER. THE VARIOUS TECHNIQUES OR ACTIONS IDENTIFIED UNDER EACH SECTION INDICATE THE APPROPRIATE SITUATION WHEN THE TECHNIQUES SHOULD BE EMPLOYED. ALSO IDENTIFIED IS A CROSS-REFERENCE TO A DIAGRAM OR FIGURE REPRESENTING THE TECHNIQUE. IT SHOULD BE NOTED THAT THE MEASURES IDENTIFIED ON THIS PLAN ARE ONLY SUGGESTED BMP(S). THE CONTRACTOR SHALL PROVIDE POLLUTION PREVENTION AND EROSION CONTROL MEASURES AS SPECIFIED IN ACCORDANCE WITH THE CURRENT TERRITORIAL POLLUTANT DISCHARGE ELIMINATION SYSTEM (TPDES) REQUIREMENTS. CONTRACTOR SHALL PREPARE REQUIRED TPDES DOCUMENTATION AND OBTAIN PERMIT PRIOR TO COMMENCEMENT OF CONSTRUCTION. IT IS THE SOLE RESPONSIBILITY OF THE CONTRACTOR TO PREPARE THE REQUIRED TPDES DOCUMENT AND OBTAIN THE TPDES PERMIT. ALL COST ASSOCIATED WITH SUCH WORK SHALL BE DEEMED INCIDENTAL TO THE EROSION CONTROL PLAN.

GENERAL EROSION CONTROL NOTES:

1. THE STORM WATER POLLUTION PREVENTION PLAN (SWPPP) IS COMPRISED OF THESE EROSION CONTROL PLAN SETS, THE STANDARD DETAILS, THE TPDES PERMIT (TO BE OBTAINED BY CONTRACTOR) AND ALL SUBSEQUENT REPORTS AND RELATED DOCUMENTS.

2. EXCAVATED SOIL/FILL TO BE TRUCKED OFFSITE TO LANDFILL TO BE USED AS COVER

3. ALL CONTRACTORS AND SUBCONTRACTORS INVOLVED WITH STORM WATER POLLUTION PREVENTION SHALL OBTAIN A COPY OF THIS DRAWING AND THE DEPARTMENT OF PLANNING AND NATURAL RESOURCES (DPNR) ENVIRONMENTAL PERMIT AND BECOME FAMILIAR WITH THEIR CONTENTS.

4. CONTRACTOR SHALL IMPLEMENT BEST MANAGEMENT PRACTICES (BMP) IN ALL CONSTRUCTION ACTIVITIES INCLUDING BUT NOT LIMITED TO THE FOLLOWING:

   A. FUEL SPILLS AND LEAKS PREVENTION
   B. PREVENT/REDUCE VEHICLE AND EQUIPMENT WASHING AND STEAM CLEANING
   C. VEHICLE AND EQUIPMENT MAINTENANCE AND REPAIR
   D. PROPER OUTDOOR LOADING/UNLOADING OF MATERIALS
   E. PREVENT/REDUCE OUTDOOR STORAGE OF RAW MATERIALS, PRODUCTS, AND BY-PRODUCTS
   F. SOLID WASTE MANAGEMENT
   G. HAZARDOUS WASTE MANAGEMENT
   H. CONCRETE WASTE MANAGEMENT
   I. SANDBLASTING WASTE MANAGEMENT
   J. STRUCTURE CONSTRUCTION AND PAINTING
   K. SPILL PREVENTION AND CONTROL
   L. CONTAMINATED SOIL MANAGEMENT
   M. SANITARY/SEPTIC WASTE MANAGEMENT
   N. SOIL EROSION CONTROL
   O. STORM WATER TURBIDITY MANAGEMENT

4. ADDITIONAL BEST MANAGEMENT PRACTICES SHALL BE IMPLEMENTED AS DICTATED BY CONDITIONS AT NO ADDITIONAL COST TO THE OWNER THROUGHOUT ALL PHASES OF CONSTRUCTION.

   A. BEST MANAGEMENT PRACTICES (BMPS) AND CONTROLS SHALL CONFORM TO FEDERAL, TERRITORIAL, OR LOCAL REQUIREMENTS OR MANUAL OF PRACTICE, AS APPLICABLE. CONTRACTOR SHALL IMPLEMENT ADDITIONAL CONTROLS AS DIRECTED BY PERMITTING AGENCY OR OWNER.

   B. SITE MAP MUST CLEARLY DELINEATE ALL TERRITORIAL WATERS. CONTRACTOR MUST MAINTAIN ALL PERMITS FOR ANY CONSTRUCTION ACTIVITY IMPACTING TERRITORIAL WATERS OR REGULATED WETLANDS ON SITE AT ALL TIMES.

   C. CONTRACTOR SHALL MINIMIZE CLEARING TO THE MAXIMUM EXTENT PRACTICAL OR AS REQUIRED BY THE GENERAL PERMIT.

   D. CONTRACTOR SHALL BEGIN CLEARING AND GRUBBING THOSE PORTIONS OF THE SITE NECESSARY TO IMPLEMENT PERIMETER CONTROL MEASURES. CLEARING AND GRUBBING FOR THE REMAINING PORTIONS OF THE PROPOSED SITE SHALL COMMENCE ONCE PERIMETER CONTROLS ARE IN PLACE. PERIMETER CONTROLS SHALL BE ACTIVELY MAINTAINED UNTIL SAID AREAS HAVE BEEN STABILIZED AND SHALL BE REMOVED ONCE FINAL STABILIZATION IS COMPLETE.

   E. GENERAL EROSION CONTROL BMPS SHALL BE EMPLOYED TO MINIMIZE SOIL EROSION AND POTENTIAL LAKE SLOPE CAVE-INS. WHILE THE VARIOUS TECHNIQUES REQUIRED WILL BE SITE AND PLAN SPECIFIC, THEY SHOULD BE EMPLOYED AS SOON AS POSSIBLE DURING CONSTRUCTION.

   F. ON-SITE & OFF-SITE SOIL STOCKPILE AND BORROW AREAS SHALL BE PROTECTED FROM EROSION AND SEDIMENTATION THROUGH IMPLEMENTATION OF BEST MANAGEMENT PRACTICES. STOCKPILE AND BORROW AREA LOCATIONS SHALL BE NOTED ON THE SITE MAP AND PERMITTED IN ACCORDANCE WITH GENERAL PERMIT REQUIREMENTS.

   G. SURFACE WATER QUALITY SHALL BE MAINTAINED BY EMPLOYING THE FOLLOWING BMP'S IN THE CONSTRUCTION PLANNING AND CONSTRUCTION OF ALL IMPROVEMENTS.

STORMWATER EROSION CONTROL NOTES:

1. CONTRACTORS OR SUBCONTRACTORS WILL BE RESPONSIBLE FOR REMOVING SEDIMENT FROM DETENTION PONDS AND ANY SEDIMENT THAT MAY HAVE COLLECTED IN THE STORM SEWER DRAINAGE SYSTEMS IN CONJUNCTION WITH THE STABILIZATION OF THE SITE.

2. SLOPES SHALL BE LEFT IN A ROUGHENED CONDITION DURING THE GRADING PHASE TO REDUCE RUNOFF VELOCITIES AND EROSION.

3. DUE TO THE GRADE CHANGES DURING THE DEVELOPMENT OF THE PROJECT, THE CONTRACTOR SHALL BE RESPONSIBLE FOR ADJUSTING THE EROSION CONTROL MEASURES (COMPOST SOCK DEVICES, ETC.) TO PREVENT EROSION.

4. WHERE PRACTICAL, STORMWATER SHALL BE CONVEYED BY SWALES.

5. EROSION CONTROL MEASURES SHALL BE EMPLOYED TO MINIMIZE TURBIDITY OF SURFACE WATERS LOCATED DOWNSTREAM OF ANY CONSTRUCTION ACTIVITY. WHILE THE VARIOUS MEASURES REQUIRED WILL BE SITE SPECIFIC, THEY SHALL BE EMPLOYED AS NEEDED IN ACCORDANCE WITH THE FOLLOWING:

   A. IN GENERAL, EROSION SHALL BE CONTROLLED AT THE FURTHEST PRACTICAL UPSTREAM LOCATION.

   B. STORMWATER INLETS SHALL BE PROTECTED DURING CONSTRUCTION. PROTECTION MEASURES SHALL BE EMPLOYED AS SOON AS PRACTICAL DURING THE VARIOUS STAGES OF INLET CONSTRUCTION. SILT BARRIERS SHALL REMAIN IN PLACE UNTIL STABILIZATION AROUND INLETS IS COMPLETE.

   C. WHEN NEEDED A TEMPORARY SEDIMENT TRAP SHOULD BE CONSTRUCTION TO DETAIN SEDIMENT-LADEN RUNOFF FROM DISTURBED AREAS.

6. SILT BARRIERS, ANY SILT WHICH ACCUMULATES BEHIND THE BARRIERS, AND ANY FILL USED TO ANCHOR THE BARRIERS SHALL BE REMOVED PROMPTLY AFTER THE END OF THE MAINTENANCE PERIOD SPECIFIED FOR THE BARRIERS.

7. WHERE REQUIRED TO PREVENT EROSION FROM SHEET FLOW ACROSS BARE GROUND FROM ENTERING A LAKE OR SWALE, A TEMPORARY SEDIMENT SUMP SHALL BE CONSTRUCTED.

8. FILTER FABRIC SHOULD BE USED FOR STORM DRAIN INLET PROTECTION BEFORE FINAL STABILIZATION.

WASTE DISPOSAL NOTES:

1. WASTE MATERIALS – ALL WASTE MATERIALS SHALL BE COLLECTED AND STORED IN A METAL DUMPSTER WITH A SECURE LID IN ACCORDANCE WITH ALL LOCAL AND TERRITORIAL LAWS. ALL TRASH AND CONSTRUCTION DEBRIS FROM THE SITE SHALL BE DEPOSITED IN THE DUMPSTER. THE SUPERINTENDENT SHALL COORDINATE WITH THE WASTE MANAGEMENT AUTHORITY TO HAVE THE DUMPSTER EMPTIED AT LEAST TWICE A WEEK AND THE WASTE TAKEN TO AN APPROPRIATE LANDFILL. NO CONSTRUCTION WASTE MATERIALS SHALL BE BURIED ON SITE. THE SUPERINTENDENT SHALL ORGANIZE TRAINING FOR THE EMPLOYEES IN THE PROPER PRACTICES WHEN DEALING WITH WASTE MATERIALS. THE SUPERINTENDENT SHALL BE RESPONSIBLE FOR POSTING AND ENFORCING WASTE MATERIAL PROCEDURES. COST ASSOCIATED WITH WASTE HAULING AND DISPOSAL IS THE RESPONSIBILITY OF THE CONTRACTOR.

2. HAZARDOUS WASTE – HAZARDOUS WASTE MATERIALS SHALL BE DISPOSED OF IN ACCORDANCE WITH ALL LOCAL AND TERRITORIAL LAWS OR AS DIRECTED BY THE MANUFACTURER. THE SUPERINTENDENT SHALL ORGANIZE THE PROPER TRAINING FOR EMPLOYEES IN THE PROPER PRACTICES WHEN DEALING WITH HAZARDOUS WASTE MATERIALS. THESE PROCEDURES SHALL BE POSTED ON THE SITE. THE PERSON WHO MANAGES THE SITE SHALL BE RESPONSIBLE FOR ENFORCING THE PROCEDURES.

3. SANITARY WASTE – SANITARY WASTE SHALL BE COLLECTED AND DISPOSED OF IN ACCORDANCE WITH ALL LOCAL AND TERRITORIAL LAWS. THE SUPERINTENDENT SHALL COORDINATE WITH THE LOCAL UTILITY FOR COLLECTION OF THE SANITARY WASTE AT LEAST THREE TIMES A WEEK TO PREVENT SPILLAGE ONTO THE SITE.

4. RUBBISH, TRASH, GARBAGE, LITTER, OR OTHER SUCH MATERIALS SHALL BE DEPOSITED INTO SEALED CONTAINERS. MATERIALS SHALL BE PREVENTED FROM LEAVING THE PREMISES THROUGH THE ACTION OF WIND OR STORM WATER DISCHARGE INTO DRAINAGE DITCHES OR WATERS OF THE TERRITORIAL .

MAINTENANCE NOTES:

ALL MEASURES STATED ON THIS EROSION AND SEDIMENT CONTROL PLAN, AND IN THE STORM WATER POLLUTION PREVENTION PLAN, SHALL BE MAINTAINED IN FULLY FUNCTIONAL CONDITION UNTIL NO LONGER REQUIRED FOR A COMPLETED PHASE OF WORK OR FINAL STABILIZATION OF THE SITE. ALL EROSION AND SEDIMENTATION CONTROL MEASURES SHALL BE CHECKED BY A QUALIFIED PERSON AT LEAST ONCE EVERY SEVEN CALENDAR DAYS AND WITHIN 24 HOURS OF THE END OF A 0.5" RAINFALL EVENT, AND CLEANED AND REPAIRED IN ACCORDANCE WITH THE FOLLOWING:

1. INLET PROTECTION DEVICES AND BARRIERS SHALL BE REPAIRED OR REPLACED IF THEY SHOW SIGNS OF UNDERMINING, OR DETERIORATION.

2. ALL SEEDED AREAS SHALL BE CHECKED REGULARLY TO SEE THAT A GOOD STAND IS MAINTAINED. AREAS SHOULD BE FERTILIZED, WATERED, AND RESEEDED AS NEEDED.

3. THE COMPOST SOCK FILTRATION DEVICE SHALL BE INSPECTED PERIODICALLY FOR HEIGHT OF SEDIMENT AND CONDITION OF DEVICE. COMPOST SOCK SHALL BE REPAIRED TO ITS ORIGINAL CONDITIONS IF DAMAGED. SEDIMENT SHALL BE REMOVED FROM THE COMPOST SOCK WHEN IT REACHES ONE-THIRD THE HEIGHT OF THE COMPOST SOCK.

4. THE CONSTRUCTION ENTRANCES SHALL BE MAINTAINED IN A CONDITION WHICH WILL PREVENT TRACKING OR FLOW OF MUD ONTO PUBLIC RIGHTS-OF-WAY. THIS MAY REQUIRE PERIODIC TOP DRESSING OF THE CONSTRUCTION ENTRANCES AS CONDITIONS DEMAND.

5. THE TEMPORARY PARKING AND STORAGE AREA SHALL BE KEPT IN GOOD CONDITION (SUITABLE FOR PARKING AND STORAGE). THIS MAY REQUIRE PERIODIC TOP DRESSING OF THE TEMPORARY PARKING AS CONDITIONS DEMAND.

6. OUTLET STRUCTURES IN THE SEDIMENTATION BASINS SHALL BE MAINTAINED IN OPERATIONAL CONDITIONS AT ALL TIMES. THE SEDIMENT BASINS/DITCHES SHALL BE CHECKED MONTHLY FOR DEPTH OF SEDIMENT. SEDIMENT SHALL BE REMOVED FROM SEDIMENT BASINS OR TRAPS WHEN THE DESIGN CAPACITY HAS BEEN REDUCED BY 10% AND AFTER CONSTRUCTION IS COMPLETE.

7. ALL MAINTENANCE OPERATIONS SHALL BE DONE IN A TIMELY MANNER BUT IN NO CASE LATER THAN SEVEN CALENDAR DAYS FOLLOWING THE INSPECTION.DIVERSION DIKES SHALL BE INSPECTED MONTHLY. ANY BREACHES SHALL BE PROMPTLY REPAIRED.

8. A MAINTENANCE REPORT SHALL BE COMPLETED DAILY AFTER EACH INSPECTION OF THE SEDIMENT AND EROSION CONTROL METHODS. THE REPORTS SHALL BE FILED IN AN ORGANIZED MANNER AND RETAINED ON-SITE DURING CONSTRUCTION. AFTER CONSTRUCTION IS COMPLETED, THE REPORTS SHALL BE SAVED FOR AT LEAST THREE YEARS. THE REPORTS SHALL BE AVAILABLE FOR ANY AGENCY THAT HAS JURISDICTION OVER EROSION CONTROL. THE REPORTS AND CORRESPONDING PAY REQUESTS SHALL BE PROVIDED TO THE OWNER MONTHLY.

9. ALL REPAIRS MUST BE MADE WITHIN 24 HOURS OF REPORT.

10. THE SUPERINTENDENT SHALL ORGANIZE THE TRAINING FOR INSPECTION PROCEDURES AND PROPER EROSION CONTROL METHODS FOR EMPLOYEES THAT COMPLETE INSPECTIONS AND REPORTS.

11. SILT FENCES SHALL BE REPAIRED TO THEIR ORIGINAL CONDITIONS IF DAMAGED. SEDIMENT SHALL BE REMOVED FROM THE SILT FENCES WHEN IT REACHES ONE-HALF THE HEIGHT OF THE SILT FENCE.

OFFSITE TRACKING:

1. STABILIZED CONSTRUCTION ENTRANCE SHALL BE PROVIDED TO REDUCE SEDIMENT TRACKING OFFSITE. THE MAJOR ROAD CONNECTED TO THE PROJECT SHALL BE CLEANED ONCE A DAY TO REMOVE ANY EXCESS MUD, DIRT OR ROCK RESULTING FROM CONSTRUCTION TRAFFIC. ALL TRUCKS HAULING MATERIALS OFFSITE SHALL BE COVERED WITH A TARPAULIN.

2. GENERAL CONTRACTOR SHALL DENOTE ON PLAN THE TEMPORARY PARKING AND STORAGE AREA WHICH SHALL ALSO BE USED AS THE EQUIPMENT MAINTENANCE AND CLEANING AREA, EMPLOYEE PARKING AREA, AND AREA FOR LOCATION PORTABLE FACILITIES, OFFICE TRAILERS, AND TOILET FACILITIES. HEAVY CONSTRUCTION EQUIPMENT PARKING AND MAINTENANCE AREAS SHALL BE DESIGNED TO PREVENT OIL, GREASE, AND LUBRICANTS FROM ENTERING SITE DRAINAGE FEATURES INCLUDING STORMWATER COLLECTION AND TREATMENT SYSTEMS. CONTRACTORS SHALL PROVIDE BROAD DIKES, HAY BALES OR SILT SCREENS AROUND, AND SEDIMENT SUMPS WITHIN, SUCH AREAS AS REQUIRED TO CONTAIN SPILLS OF OIL, GREASE OR LUBRICANTS. CONTRACTORS SHALL HAVE AVAILABLE, AND SHALL USE, ABSORBENT FILTER PADS TO CLEAN UP SPILLS AS SOON AS POSSIBLE AFTER OCCURRENCE.

3. ALL WASH WATER FROM CONCRETE TRUCKS, VEHICLE CLEANING, EQUIPMENT CLEANING, ETC. SHALL BE DETAINED ON SITE AND SHALL BE PROPERLY TREATED OR DISPOSED IN ACCORDANCE WITH TERRITORIAL LAWS AND REGULAITONS.

4. IF THE ACTION OF VEHICLES TRAVELING OVER THE GRAVEL CONSTRUCTION ENTRANCES IS NOT SUFFICIENT TO REMOVE THE MAJORITY OF DIRT OR MUD, THEN THE TIRES MUST BE WASHED BEFORE THE VEHICLES ENTER A PUBLIC ROAD. IF WASHING IS USED, PROVISIONS MUST BE MADE TO INTERCEPT THE WASH WATER AND TRAP THE SEDIMENT BEFORE IT IS CARRIED OFF THE SITE.

5. ALL MATERIALS SPILLED, DROPPED, WASHED, OR TRACKED FROM VEHICLES ONTO ROADWAYS OR INTO STORM DRAINS MUST BE REMOVED IMMEDIATELY.

CONSTRUCTION DOCUMENTS

No.	REVISIONS	DATE	BY

Kimley»Horn

PROFESSIONAL ENGINEER
GEORGE BALABAN, P.E.
0-51817-1B
U.S. VIRGIN ISLANDS
07/09/2026

KHA PROJECT	045826000
DATE	JUNE 2026
SCALE	AS SHOWN
DESIGNED BY	GB
DRAWN BY	JB
CHECKED BY	MB

EROSION CONTROL NOTES

LBJ PUMP STATION
PREPARED FOR
VIWMA

SHEET NUMBER
C-02

Plotted By:Chaturvedi, Manas Sheet Set:FEC Layout:C-02 EROSION CONTROL NOTES June 29, 2026 03:59:55pm K:\FTL_Civil\045 Jobs\045826000 LBJ Pump Station\Design\CADD\PlanSheets\C-02 EROSION CONTROL & DEMOLITION NOTES.dwg

SPILL PREVENTION AND CONTROL:

THE FOLLOWING ARE THE MATERIAL MANAGEMENT PRACTICES THAT WILL BE USED TO REDUCE THE RISK OF SPILLS OR OTHER ACCIDENTAL EXPOSURE OF MATERIALS AND SUBSTANCES TO STORM WATER RUNOFF.

1. GOOD HOUSEKEEPING

   A. SUPERINTENDENT SHALL INSPECT PROJECT AREA DAILY FOR PROPER STORAGE, USE, AND DISPOSAL OF CONSTRUCTION MATERIALS.

   B. STORE ONLY ENOUGH MATERIAL ON SITE FOR PROJECT COMPLETION.

   C. ALL SUBSTANCES SHOULD BE USED BEFORE DISPOSAL OF CONTAINER.

   D. ALL CONSTRUCTION MATERIALS STORED SHALL BE ORGANIZED AND IN THE PROPER CONTAINER AND IF POSSIBLE, STORED UNDER A ROOF OR PROTECTIVE COVER.

   E. PRODUCTS SHALL NOT BE MIXED UNLESS DIRECTED BY THE MANUFACTURER.

   F. ALL PRODUCTS SHALL BE USED AND DISPOSED OF ACCORDING TO THE MANUFACTURER'S RECOMMENDATIONS.

2. HAZARDOUS PRODUCTS

   A. MATERIALS SHOULD BE KEPT IN ORIGINAL CONTAINER WITH LABELS UNLESS THE ORIGINAL CONTAINERS CANNOT BE RESEALED. IF ORIGINAL CONTAINERS CANNOT BE USED, LABELS AND PRODUCT INFORMATION SHALL BE SAVED.

   B. PROPER DISPOSAL PRACTICES SHALL ALWAYS BE FOLLOWED IN ACCORDANCE WITH MANUFACTURER AND LOCAL/TERRITORIAL REGULATIONS.

3. PRODUCT SPECIFIC PRACTICES

   A. PETROLEUM PRODUCTS MUST BE STORED IN PROPER CONTAINERS AND CLEARLY LABELED. VEHICLES CONTAINING PETROLEUM PRODUCTS SHALL BE PERIODICALLY INSPECTED FOR LEAKS. PRECAUTIONS SHALL BE TAKEN TO AVOID LEAKAGE OF PETROLEUM PRODUCTS ON SITE.

   B. THE MINIMUM AMOUNT OF FERTILIZER SHALL BE USED AND MIXED INTO THE SOIL IN ORDER TO LIMIT EXPOSURE TO STORM WATER. FERTILIZERS SHALL BE STORED IN A COVERED SHED. THE CONTENTS OF ANY PARTIALLY USED BAGS OF FERTILIZER SHALL BE TRANSFERRED TO A SEALABLE PLASTIC BIN TO AVOID SPILLS.

   C. PAINT CONTAINERS SHALL BE SEALED AND STORED WHEN NOT IN USE. EXCESS PAINT MUST BE DISPOSED OF IN AN APPROVED MANNER.

   D. CONCRETE TRUCKS SHALL NOT BE ALLOWED TO WASH OUT OR DISCHARGE SURPLUS CONCRETE OR DRUM WASH WATER ON THE SITE.

SPILL CLEANUP:

IN ADDITION TO THE GOOD HOUSEKEEPING AND MATERIAL MANAGEMENT PRACTICES DISCUSSED ABOVE, THE FOLLOWING PRACTICES SHALL BE FOLLOWED FOR SPILL PREVENTION AND CLEANUP:

1. SPILL CLEANUP INFORMATION SHALL BE POSTED ON SITE TO INFORM EMPLOYEES ABOUT CLEANUP PROCEDURES AND RESOURCES.
2. THE FOLLOWING CLEAN-UP EQUIPMENT MUST BE KEPT ON-SITE NEAR THE MATERIAL STORAGE AREA: GLOVES, MOPS, RAGS, BROOMS, DUST PANS, SAND, SAWDUST, LIQUID ABSORBER, GOGGLES, AND TRASH CONTAINERS.
3. SUFFICIENT OIL AND GREASE ABSORBING MATERIALS AND FLOTATION BOOMS SHALL BE MAINTAINED ONSITE AND READILY AVAILABLE TO CONTAIN AND CLEAN-UP FUEL OR CHEMICAL SPILLS AND LEAKS.
4. ALL SPILLS SHALL BE CLEANED UP AS SOON AS POSSIBLE.
5. WHEN CLEANING A SPILL, THE AREA SHOULD BE WELL VENTILATED AND THE EMPLOYEE SHALL WEAR PROPER PROTECTIVE COVERING TO PREVENT INJURY.
6. TOXIC SPILLS MUST BE REPORTED TO THE PROPER AUTHORITY REGARDLESS OF THE SIZE OF THE SPILL.
7. AFTER A SPILL, THE PREVENTION PLAN SHALL BE REVIEWED AND CHANGED TO PREVENT FURTHER SIMILAR SPILLS FROM OCCURRING. THE CAUSE OF THE SPILL, MEASURES TO PREVENT IT, AND HOW TO CLEAN THE SPILL UP SHALL BE RECORDED.
8. THE SUPERINTENDENT SHALL BE THE SPILL PREVENTION AND CLEANUP COORDINATOR AND IS RESPONSIBLE FOR THE DAY TO DAY SITE OPERATIONS. THE SUPERINTENDENT ALSO OVERSEES THE SPILL PREVENTION PLAN AND SHALL BE RESPONSIBLE FOR EDUCATING THE EMPLOYEES ABOUT SPILL PREVENTION AND CLEANUP PROCEDURES.

WIND EROSION CONTROL NOTES:

1. WIND EROSION SHALL BE CONTROLLED BY EMPLOYING THE FOLLOWING METHODS AS NECESSARY AND APPROPRIATE:

   A. BARE EARTH AREAS SHALL BE WATERED DURING CONSTRUCTION AS NECESSARY TO MINIMIZE THE TRANSPORT OF FUGITIVE DUST. IT MAY BE NECESSARY TO LIMIT CONSTRUCTION VEHICLE SPEED IF BARE EARTH HAS NOT BEEN EFFECTIVELY WATERED. IN NO CASE SHALL FUGITIVE DUST BE ALLOWED TO LEAVE THE SITE UNDER CONSTRUCTION.

   B. DISTURBED PORTIONS OF THE SITE WHERE CONSTRUCTION ACTIVITY HAS PERMANENTLY STOPPED SHALL BE PERMANENTLY SEEDED (SEE PERMANENT STABILIZATION PRACTICES FOR DETAILS). THESE AREAS SHALL BE SEEDED NO LATER THAN 14 DAYS AFTER THE LAST CONSTRUCTION ACTIVITY OCCURRING IN THESE AREAS. REFER TO THE GRADING PLAN AND/OR LANDSCAPE PLAN. CLEARED SITE DEVELOPMENT AREAS NOT CONTINUALLY SCHEDULED FOR CONSTRUCTION ACTIVITIES SHALL BE COVERED WITH HAY OR OVERSEEDED AND PERIODICALLY WATERED SUFFICIENTLY TO STABILIZE THE TEMPORARY GROUNDCOVER (SEE TEMPORARY STABILIZATION PRACTICES FOR DETAILS).

   C. AT ANY TIME BOTH DURING AND AFTER SITE CONSTRUCTION THAT WATERING AND/OR VEGETATION ARE NOT EFFECTIVE IN CONTROLLING WIND EROSION AND/OR TRANSPORT OF FUGITIVE DUST, OTHER METHODS AS ARE NECESSARY FOR SUCH CONTROL SHALL BE EMPLOYED. THESE METHODS SHOULD INCLUDE ERECTION OF DUST CONTROL FENCES. A 6-FT GEOTEXTILE FILTER FABRIC SHOULD BE HANGING AGAINST THE EXISTING CHAIN LINK FENCE AND GATE.

2. ALL DUST ON THE SITE SHALL BE CONTROLLED. THE USE OF MOTOR OILS AND OTHER PETROLEUM BASED OR TOXIC LIQUIDS FOR DUST SUPPRESSION OPERATIONS IS PROHIBITED.

SEQUENCE OF CONSTRUCTION:

UPON IMPLEMENTATION AND INSTALLATION OF THE FOLLOWING AREAS: TRAILER, PARKING, LAYDOWN, PORTA-POTTY, WHEEL WASH, CONCRETE WASHOUT, FUEL AND MATERIAL STORAGE CONTAINERS, SOLID WASTE CONTAINERS, ETC., IMMEDIATELY DENOTE THEM ON THE SITE MAPS AND NOTE ANY CHANGES IN LOCATION AS THEY OCCUR THROUGHOUT THE CONSTRUCTION PROCESS.

PHASE 1:
1. CONSTRUCT STABILIZED CONSTRUCTION ENTRANCE AND INSTALL SILT FENCE AND INLET PROTECTION.
2. PERFORM CLEARING AND GRUBBING AND DEMOLITION.

PHASE 2:
1. PERFORM MASS GRADING. ROUGH GRADE TO ESTABLISH PROPOSED DRAINAGE PATTERNS.
2. CONSTRUCT PROPOSED DRAINAGE INFRASTRUCTURE.
3. TEMPORARILY SEED WITH PURE LIVE SEED, THROUGHOUT CONSTRUCTION, DISTURBED AREAS THAT WILL BE INACTIVE FOR 7 DAYS OR MORE OR AS REQUIRED BY DPNR PERMIT.
4. CONSTRUCT PROPOSED IMPROVEMENTS.
5. COMPLETE FINAL GRADING AND FINAL STABILIZATION.
   REMOVE TEMPORARY EROSION CONTROL MEASURES.

SOIL EROSION/SEDIMENTATION CONTROL OPERATION TIME SCHEDULE

NOTE: GENERAL CONTRACTOR TO COMPLETE TABLE WITH THEIR SPECIFIC PROJECT SCHEDULE

CONSTRUCTION SEQUENCE	JAN	FEB	MAR	APR	MAY	JUN	JUL	AUG	SEP	OCT	NOV	DEC	JAN	FEB	MAR	APR	MAY	JUN
TEMPORARY CONSTRUCTION ENTRANCE																		
TEMPORARY CONTROL MEASURES																		
STRIP & STOCKPILE TOPSOIL																		
ROUGH GRADE																		
STORM FACILITIES																		
BUILDING PAD CONSTRUCTION																		
FINISH GRADING																		
LANDSCAPING/SEED/FINAL STABILIZATION																		

CONSTRUCTION DOCUMENTS

No.	REVISIONS	DATE	BY

Kimley»Horn

PROFESSIONAL ENGINEER
GEORGE BALABAN, P.E.
0-51817-1B
U.S. VIRGIN ISLANDS
06/09/2026

KHA PROJECT 045826000
DATE JUNE 2026
SCALE AS SHOWN
DESIGNED BY GB
DRAWN BY JB
CHECKED BY MB

EROSION CONTROL NOTES

LBJ PUMP STATION
PREPARED FOR
VIWMA

SHEET NUMBER
C-03

Plotted By:Chaturvedi, Manas Sheet Set:FEC Layout:C-03 EROSION CONTROL NOTES June 29, 2026 03:59:57pm K:\FTL_Civil\045 Jobs\045826000 LBJ Pump Station\Design\CADD\PlanSheets\C-02 EROSION CONTROL & DEMOLITION NOTES.dwg

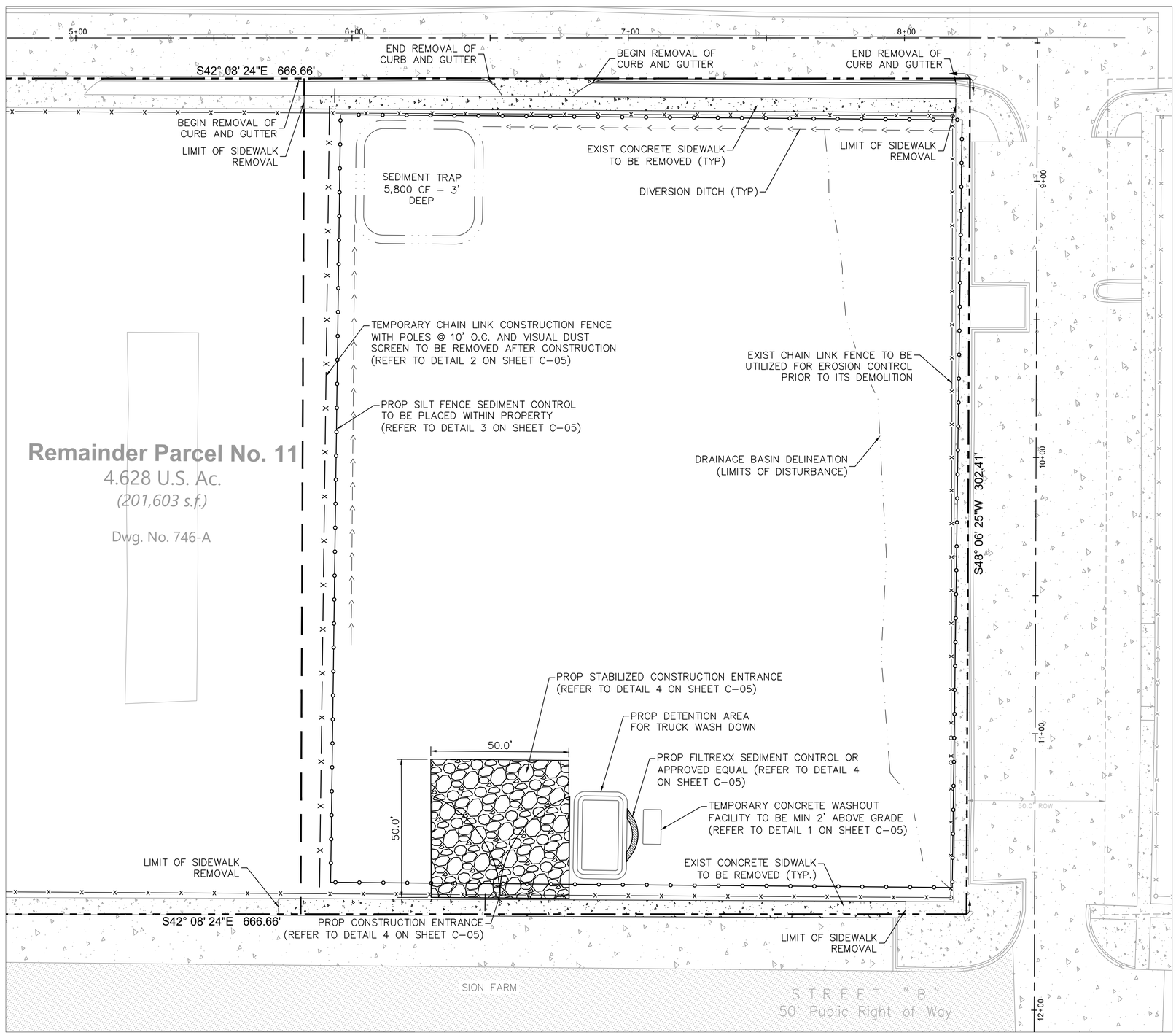

NORTH

GRAPHIC SCALE IN FEET
0 10 20 40

LEGEND

- PROPERTY LINE/RIGHT–OF–WAY
- LIMIT OF PROJECT AREA
- CONSTRUCTION ENTRANCE
- LIMIT OF EXIST CONCRETE PAVEMENT DEMO
- SILT FENCE
- CHAIN LINK FENCE
- LIMITS OF DISTURBANCE/DRAINAGE AREA
- SEDIMENT TRAP
- DIVERSION DITCH

EROSION CONTROL PLAN NOTES:

1. ALL PERIMETER SILT FENCE AND ROCK CONSTRUCTION ENTRANCES SHALL BE INSTALLED PRIOR TO CONSTRUCTION.
2. THE CONTRACTOR SHALL INSTALL CATCH BASIN EROSION CONTROL MEASURES AT ALL EXISTING STORM INLETS PRIOR TO CONSTRUCTION AND AT ALL PROPOSED STORM INLETS UPON INSTALLATION.
3. WITHIN TWO WEEKS (14 DAYS) OF SITE GRADING, ALL DISTURBED AREAS SHALL BE STABILIZED WITH SEED, SOD, OR ROCK BASE. REFER TO LANDSCAPE PLANS FOR MATERIALS.
4. ALL EROSION CONTROL MEASURES SHALL BE INSTALLED AND MAINTAINED IN ACCORDANCE WITH AHJ, AND WATERSHED DISTRICT PERMITS.
5. THE CONTRACTOR SHALL MAINTAIN ALL EROSION CONTROL MEASURES, INCLUDING THE REMOVAL OF SILT IN FRONT OF SILT FENCES DURING THE DURATION OF THE CONSTRUCTION.
6. ANY EXCESS SEDIMENT IN PROPOSED BASINS SHALL BE REMOVED BY THE CONTRACTOR.
7. REMOVE ALL EROSION CONTROL MEASURES AFTER VEGETATION IS ESTABLISHED.
8. THE CONTRACTOR SHALL REMOVE ALL SOILS AND SEDIMENT TRACKED ONTO EXISTING STREETS AND PAVED AREAS.
9. IF BLOWING DUST BECOMES A NUISANCE, THE CONTRACTOR SHALL APPLY WATER FROM A TANK TRUCK TO ALL CONSTRUCTION AREAS.
10. SWEEP ADJACENT STREETS IN ACCORDANCE WITH AHJ REQUIREMENTS.
11. PROPOSED SILT FENCE SEDIMENT CONTROL TO BE PLACED WITHIN PROPERTY BOUNDARY.

SEQUENCE OF CONSTRUCTION:

UPON IMPLEMENTATION AND INSTALLATION OF THE FOLLOWING AREAS: TRAILER, PARKING, LAYDOWN, PORTA–POTTY, WHEEL WASH, CONCRETE WASHOUT, FUEL AND MATERIAL STORAGE CONTAINERS, SOLID WASTE CONTAINERS, ETC., IMMEDIATELY DENOTE THEM ON THE SITE MAPS AND NOTE ANY CHANGES IN LOCATION AS THEY OCCUR THROUGHOUT THE CONSTRUCTION PROCESS.

BMP AND EROSION CONTROL INSTALLATION SEQUENCE SHALL BE AS FOLLOWS:

1. INSTALL INLET PROTECTION AT EXISTING STORMWATER CULVERTS.
2. CONSTRUCT STABILIZED CONSTRUCTION ENTRANCE (1), CONCRETE WASHOUT PIT (1) AND INSTALL SILT FENCE.
3. PREPARE TEMPORARY PARKING AND STORAGE AREA.
4. CONSTRUCT AND STABILIZE DIVERSIONS AND TEMPORARY SEDIMENT TRAPS.
5. PERFORM CLEARING AND GRUBBING OF THE SITE. PERFORM MASS GRADING. ROUGHT GRADE TO ESTABLISH PROPOSED DRAINAGE PATTERNS.
6. START CONSTRUCTION OF THE BUILDING PAD AND STRUCTURES.
7. TEMPORARILY SEED WITH PURE LIVE SEED, THROUGHOUT CONSTRUCTION, DISTURBED AREAS THAT WILL BE INACTIVE FOR 7 DAYS OR MORE OR AS REQUIRED BY TPDES AND/OR ST. CROIX REQUIREMENTS.

CONTRACTOR SHALL ENSURE STOCKPILING OF ANY ADDITIONAL FILL BE PROPERLY PLACED AS TO NOT LIMIT THE NATURAL DRAINAGE PATTERN FOR THE OVERALL PROJECT.

CONSTRUCTION DOCUMENTS

No.	REVISIONS	DATE	BY

Kimley»Horn

PROFESSIONAL ENGINEER
GEORGE BALABAN, P.E.
0–51817–1B
U.S. VIRGIN ISLANDS
07/09/2026

KHA PROJECT 045826000
DATE JUNE 2026
SCALE AS SHOWN
DESIGNED BY GB
DRAWN BY JB
CHECKED BY MB

PUMP STATION EROSION CONTROL & DEMOLITION PLAN

LBJ PUMP STATION
PREPARED FOR
VIWMA

SHEET NUMBER
C-04

Plotted By:Chaturvedi, Manas Sheet Set:FEC Layout:C-04 PUMP STATION EROSION CONTROL & DEMOLITION PLAN June 29, 2026 04:00:17pm K:\FTL_Civil\045 Jobs\045826000 LBJ Pump Station\Design\CADD\PlanSheets\C-04 PUMP STATION EROSION CONTROL & DEMOLITION PLAN.dwg

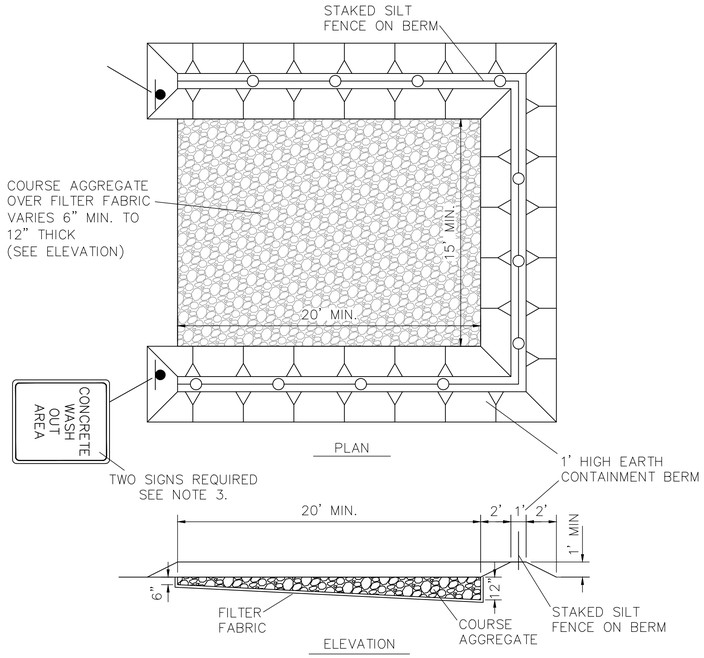

NOTES:
1. ALL MATERIAL SHALL BE REMOVED FROM THE SITE AT THE END OF THE PROJECT.
2. AGGREGATE SHALL BE REPLACED AS DIRECTED BY THE ENGINEER OF RECORD AND/OR THE CITY WHEN EXCESSIVE MATERIALS BUILDUP RENDERS THE WASH OUT AREA NO LONGER FUNCTIONAL.
3. SIGNS SHALL BE 18" X 12" MIN. SIZE WITH 2" BLACK LETTERING ON A WHITE BACKGROUND AND MOUNTED A MINIMUM OF 7 FEET ABOVE GRADE FROM THE LOWEST EDGE OF THE SIGN FACE.

1 CONCRETE WASH OUT AREA
N.T.S

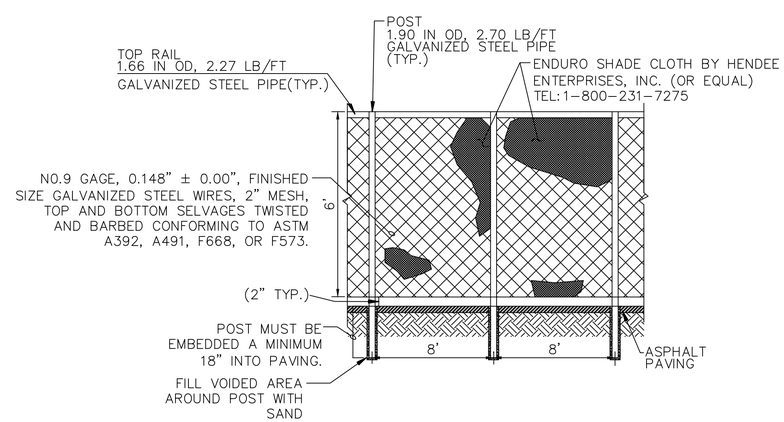

2 6' CHAIN LINK CONSTRUCTION FENCE WITH VISUAL DUST SCREEN
N.T.S

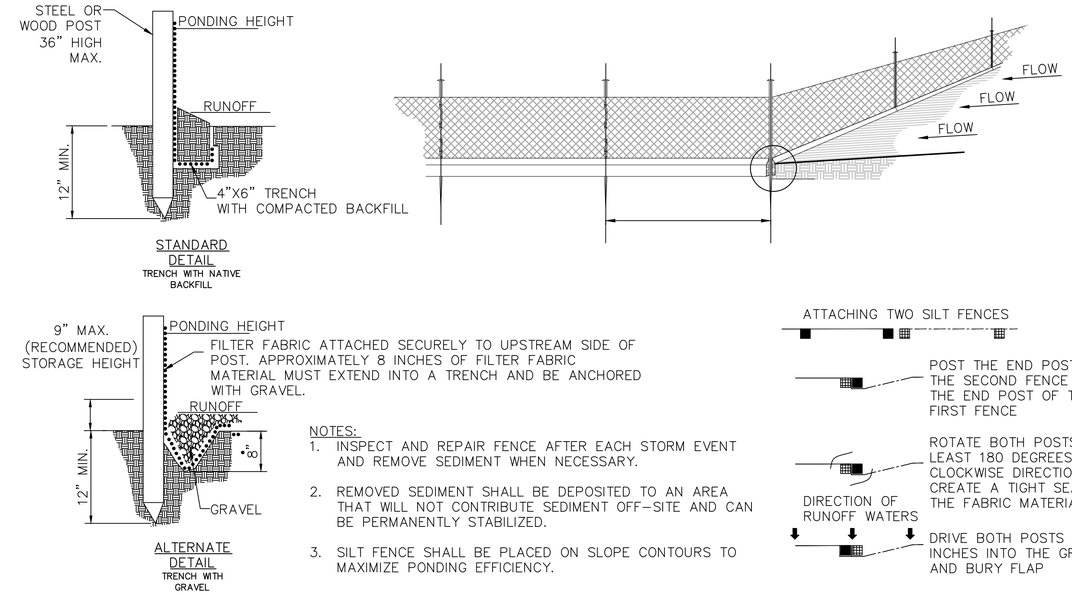

NOTES:
1. INSPECT AND REPAIR FENCE AFTER EACH STORM EVENT AND REMOVE SEDIMENT WHEN NECESSARY.
2. REMOVED SEDIMENT SHALL BE DEPOSITED TO AN AREA THAT WILL NOT CONTRIBUTE SEDIMENT OFF-SITE AND CAN BE PERMANENTLY STABILIZED.
3. SILT FENCE SHALL BE PLACED ON SLOPE CONTOURS TO MAXIMIZE PONDING EFFICIENCY.

3 SILT FENCE SEDIMENT CONTROL DETAIL
N.T.S

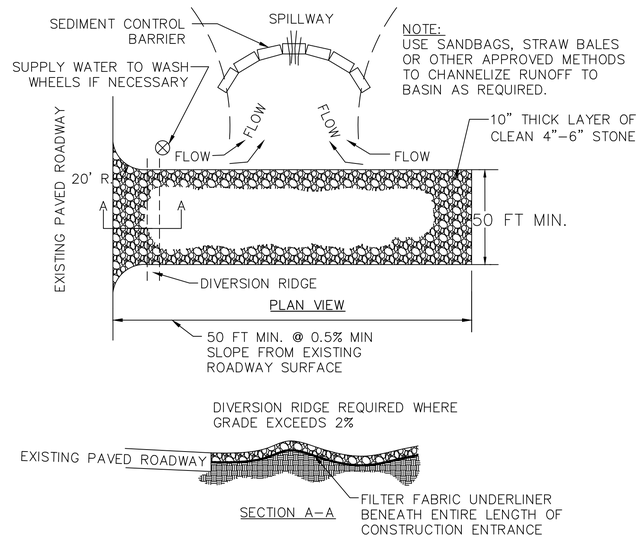

NOTE:
USE SANDBAGS, STRAW BALES OR OTHER APPROVED METHODS TO CHANNELIZE RUNOFF TO BASIN AS REQUIRED.

NOTES:
1. THE ENTRANCE SHALL BE MAINTAINED IN A CONDITION THAT WILL PREVENT TRACKING OR FLOWING OF SEDIMENT ONTO PUBLIC RIGHTS-OF-WAY. THIS MAY REQUIRE TOP DRESSING, REPAIR AND/OR CLEANOUT OF ANY MEASURES USED TO TRAP SEDIMENT.
2. WHEN NECESSARY, WHEELS SHALL BE CLEANED PRIOR TO ENTRANCE ONTO PUBLIC RIGHT-OF-WAY.
3. WHEN WASHING IS REQUIRED, IT SHALL BE DONE ON AN AREA STABILIZED WITH CRUSHED STONE THAT DRAINS INTO AN APPROVED SEDIMENT TRAP OR SEDIMENT BASIN.

4 STABILIZED CONSTRUCTION ENTRANCE DETAIL
N.T.S

CONSTRUCTION DOCUMENTS

No.	REVISIONS	DATE	BY

Kimley»Horn

PROFESSIONAL ENGINEER
GEORGE BALABAN, P.E.
0-51817-1B
U.S. VIRGIN ISLANDS
12/09/2026

KHA PROJECT 045826000
DATE JUNE 2026
SCALE AS SHOWN
DESIGNED BY GB
DRAWN BY JB
CHECKED BY MB

EROSION CONTROL DETAILS

LBJ PUMP STATION
PREPARED FOR
VIWMA

SHEET NUMBER
C-05

Plotted By:Chaturvedi, Manas Sheet Set:FEC Layout:C-05 EROSION CONTROL DETAILS June 29, 2026 04:00:32pm K:\FTL_Civil\045 Jobs\045826000 LBJ Pump Station\Design\CADD\PlanSheets\C-05 EROSION CONTROL DETAILS.dwg

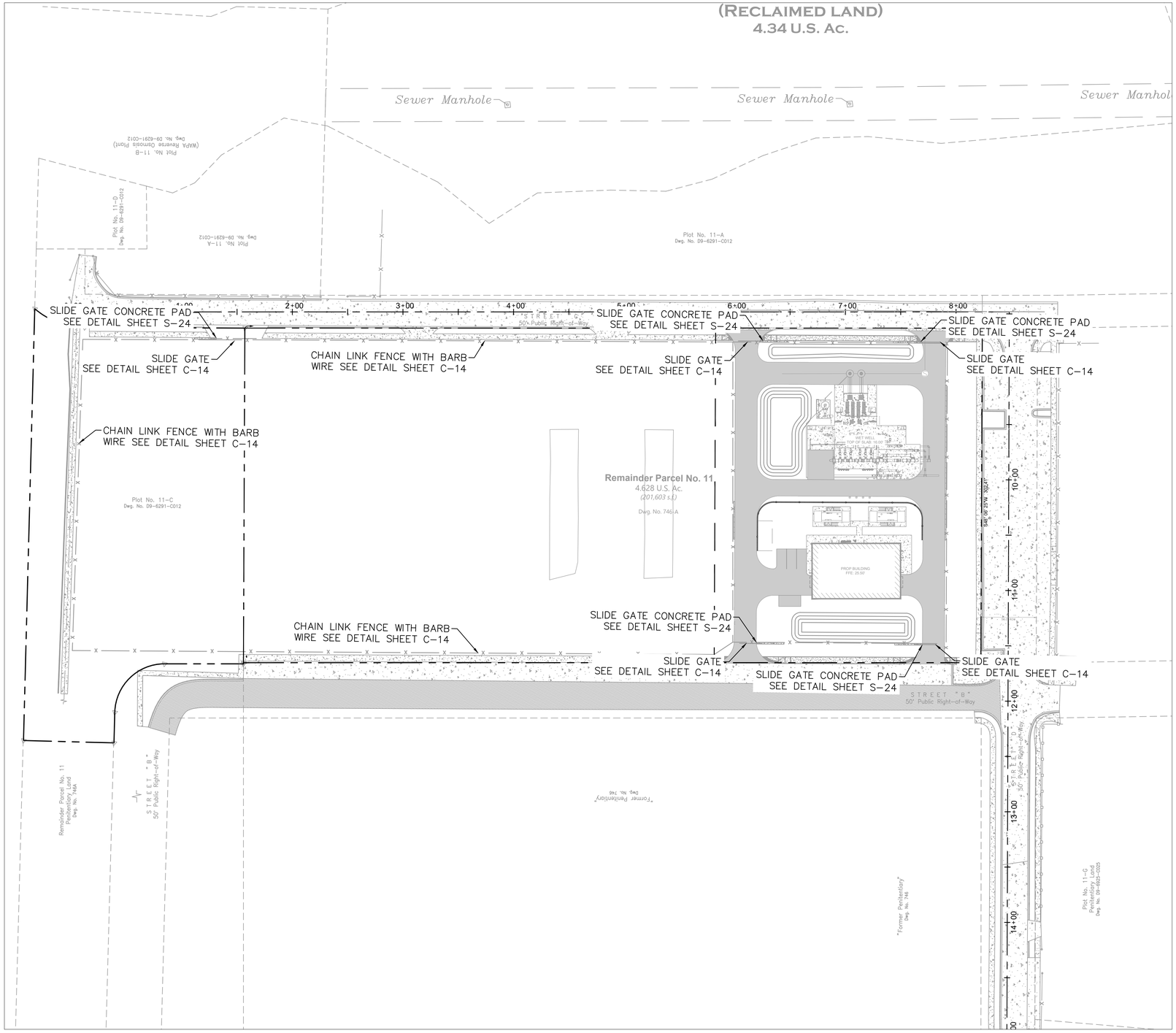

NORTH

GRAPHIC SCALE IN FEET
0 25 50 100

LEGEND

- PROPERTY LINE/RIGHT-OF-WAY
- LIMIT OF PROJECT AREA
- CHAIN LINK FENCE WITH BARB WIRE
- SLIDE GATE CONCRETE PAD

CONTRACTOR SHALL ENSURE STOCKPILING OF ANY ADDITIONAL FILL BE PROPERLY PLACED AS TO NOT LIMIT THE NATURAL DRAINAGE PATTERN FOR THE OVERALL PROJECT.

CONSTRUCTION DOCUMENTS

No.	REVISIONS	DATE	BY

Kimley»Horn

EDT Sign of Quality

PROFESSIONAL ENGINEER
GEORGE BALABAN, P.E.
0-51817-1B
U.S. VIRGIN ISLANDS
07/09/2026

KHA PROJECT 045826000
DATE JUNE 2026
SCALE AS SHOWN
DESIGNED BY GB
DRAWN BY JB
CHECKED BY MB

PUMP STATION FENCING PLAN

LBJ PUMP STATION
PREPARED FOR
VIWMA

SHEET NUMBER
C-06

Plotted By:Chaturvedi, Manas Sheet Set:FEC Layout:C-06 PUMP STATION FENCING PLAN June 29, 2026 04:01:04pm K:\FTL_Civil\045 Jobs\045826000 LBJ Pump Station\Design\CADD\PlanSheets\C-06 PUMP STATION FENCING PLAN.dwg

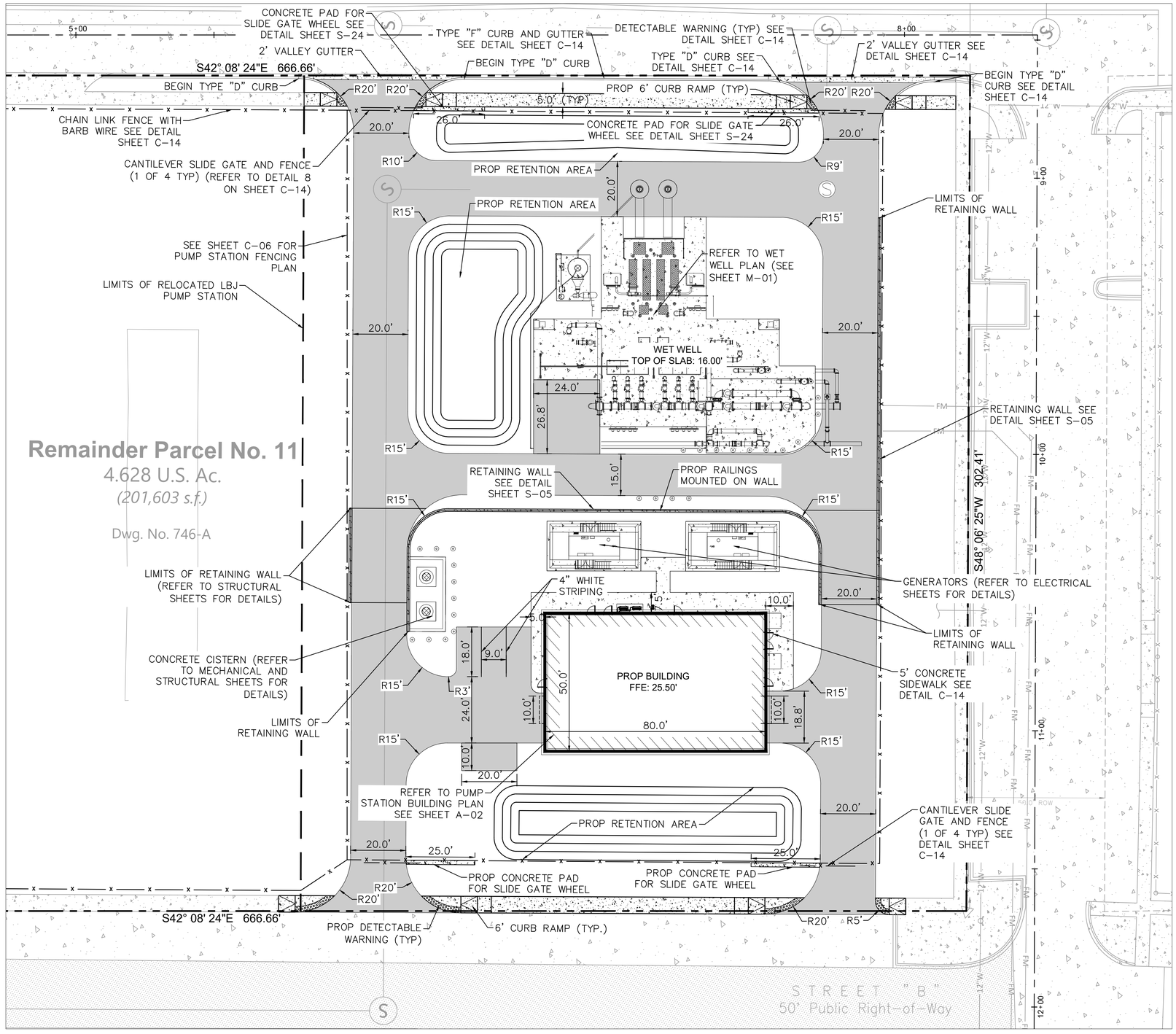

GRAPHIC SCALE IN FEET
0 10 20 40

LEGEND

- PROPERTY LINE/RIGHT-OF-WAY
- LIMIT OF PROJECT AREA
- PROP CHAIN LINK FENCE WITH BARB WIRE (PER DETAIL 3 ON SHEET C-11)
- PROP BUILDING
- EXIST CONCRETE
- PROP CONCRETE (PER DETAIL 1 ON SHEET C-11)
- PROP DETECTABLE WARNING (PER DETAIL 5 ON SHEET C-11)
- HEAVY DUTY CONCRETE (PER DETAIL 2 ON SHEET C-11)
- PROP RETAINING WALL

SITE DIMENSIONS:

TOTAL SITE AREA – 72,750 SQFT (1.67 ACRES)

PARKING SPACES (EA) – 3 SPACES (9' X 18')

SLIDE GATES – 25'

NOTES:

SEE SHEET C-11 OVERALL YARD PIPING PLAN FOR YARD PIPING DETAILS.

No.	REVISIONS	DATE	BY

Kimley»Horn

PROFESSIONAL ENGINEER
GEORGE BALABAN, P.E.
0-51817-1B
U.S. VIRGIN ISLANDS
12/09/2026

KHA PROJECT 045826000
DATE JUNE 2026
SCALE AS SHOWN
DESIGNED BY CB
DRAWN BY JB
CHECKED BY MB

SITE PLAN

LBJ PUMP STATION
PREPARED FOR
VIWMA

CONSTRUCTION DOCUMENTS

SHEET NUMBER
C-07

Plotted By:Chaturvedi, Manas Sheet Set:FEC Layout:C-07 SITE PLAN June 29, 2026 04:02:10pm K:\FTL_Civil\045 Jobs\045826000 LBJ Pump Station\Design\CADD\PlanSheets\C-07 SITE PLAN.dwg

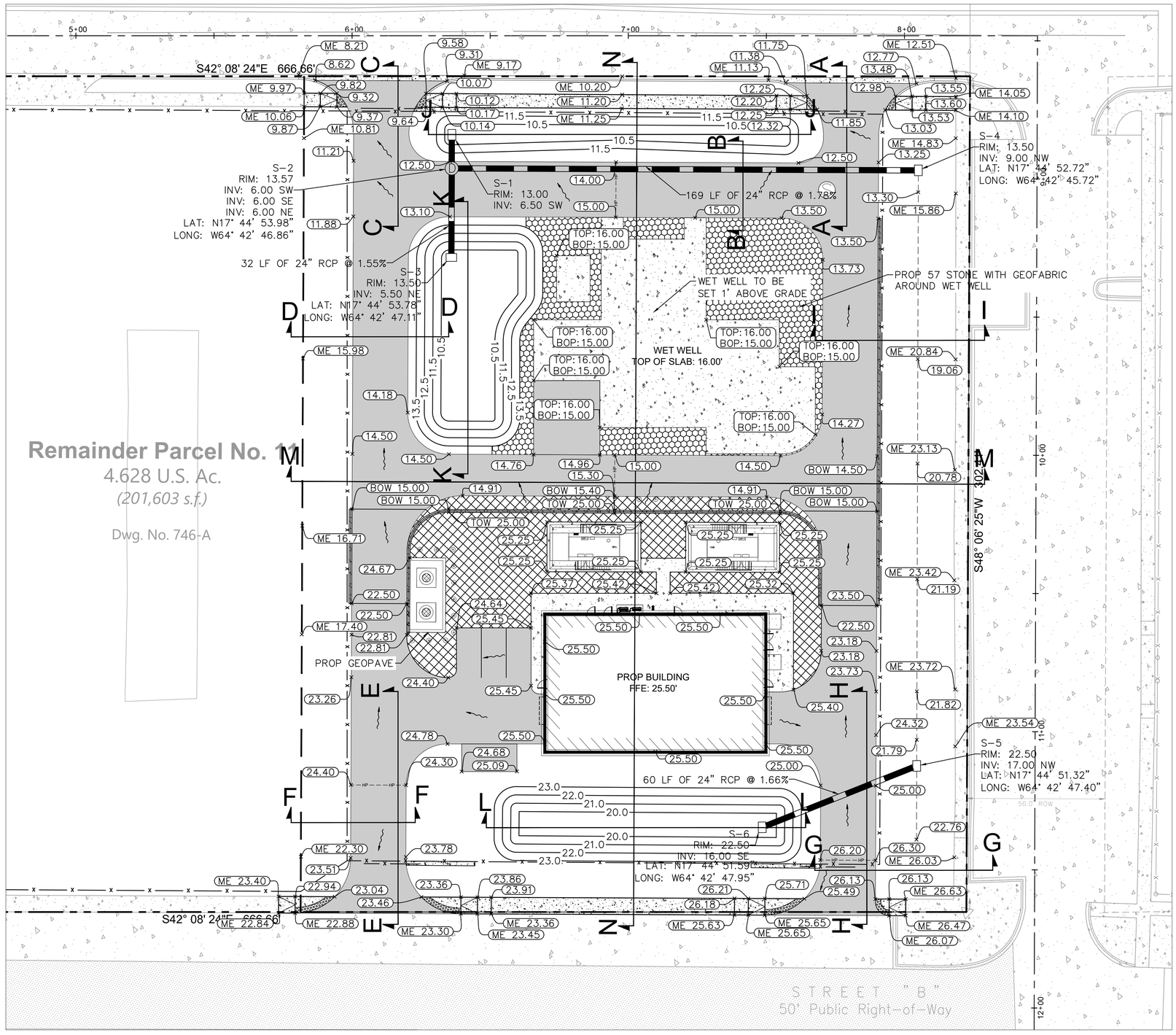

GRAPHIC SCALE IN FEET
0 10 20 40

NORTH

LEGEND

- PROPERTY LINE/RIGHT-OF-WAY
- LIMIT OF PROJECT AREA
- (ME XX.XX) MATCH EXISTING ELEVATION
- (XX.XX) PROP ELEVATION
- (BC XX.XX) PROP BOTTOM OF CURB ELEVATION
- (TC XX.XX) PROP TOP OF CURB ELEVATION
- (TOW XX.XX) PROP TOP OF WALL ELEVATION
- (BOW XX.XX) PROP BOTTOM OF WALL ELEVATION
- (ME BC XX.XX) MATCH EXISTING BOTTOM OF CURB ELEVATION
- (ME TC XX.XX) MATCH EXISTING TOP OF CURB ELEVATION
- (TOP: XX.XX BOP: XX.XX) PROP TOP/BOTTOM OF PAD ELEVATION
- EXIST CONCRETE
- PROP CONCRETE
- PROP HEAVY DUTY CONCRETE
- PROP 57 STONE WITH GEOFABRIC
- PROP GEOPAVE
- PROP 24" RCP
- PROP DRAINAGE STRUCTURE
- X X CROSS SECTION
- PROP CHAIN LINK FENCE WITH BARB WIRE
- PROP HIGH POINT
- PROP SWALE

DRAINAGE STRUCTURE TABLE

STRUCTURE	STRUCTURE TYPE	RIM ELEV.	INVERT ELEVATION
S-1	CATCH BASIN	RIM = 13.00	(24") 6.50 (SW)
S-2	DRAINAGE MANHOLE	RIM = 13.57	(24") 6.00 (SW) (24") 6.00 (SE) (24") 6.00 (NE)
S-3	CATCH BASIN	RIM = 13.50	(24") 5.50 (NE)
S-4	CATCH BASIN	RIM = 13.50	(24") 9.00 (NW)
S-5	CATCH BASIN	RIM = 22.50	(24") 17.00 (NW)
S-6	CATCH BASIN	RIM = 22.50	(24") 16.00 (SE)

CONSTRUCTION DOCUMENTS

No.	REVISIONS	DATE	BY

Kimley»Horn

PROFESSIONAL ENGINEER
GEORGE BALABAN, P.E.
0-51817-1B
U.S. VIRGIN ISLANDS
07/09/2026

KHA PROJECT 045826000
DATE JUNE 2026
SCALE AS SHOWN
DESIGNED BY GB
DRAWN BY JB
CHECKED BY MB

PAVING GRADING & DRAINAGE PLAN

LBJ PUMP STATION
PREPARED FOR
VIWMA

SHEET NUMBER
C-08

Plotted By:Chaturvedi, Manas Sheet Set:FEC Layout:C-08 PAVING GRADING & DRAINAGE PLAN June 29, 2026 04:02:50pm K:\FTL_Civil\045 Jobs\045826000 LBJ Pump Station\Design\CADD\PlanSheets\C-08 PAVING GRADING & DRAINAGE PLAN.dwg

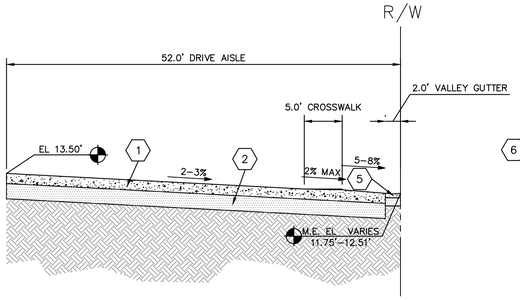

SECTION A-A

SCALE: N.T.S.

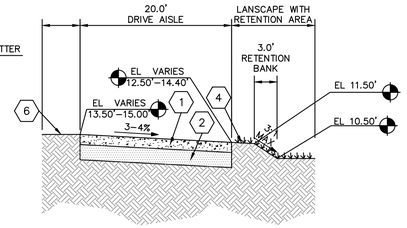

SECTION B-B

SCALE: N.T.S.

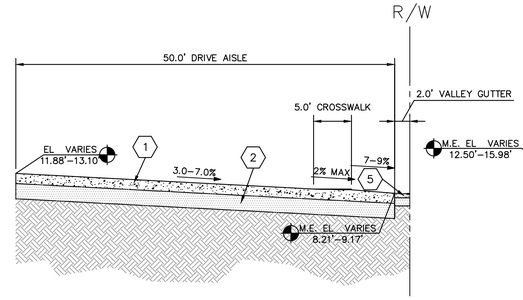

SECTION C-C

SCALE: N.T.S.

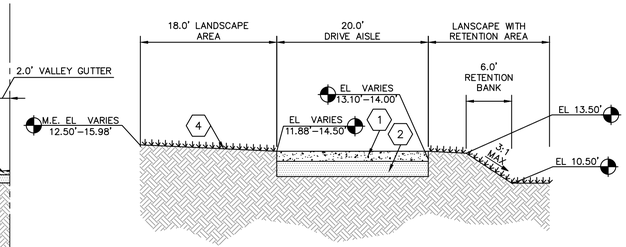

SECTION D-D

SCALE: N.T.S.

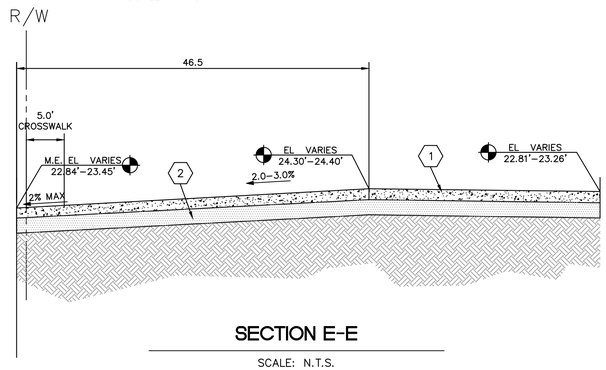

SECTION E-E

SCALE: N.T.S.

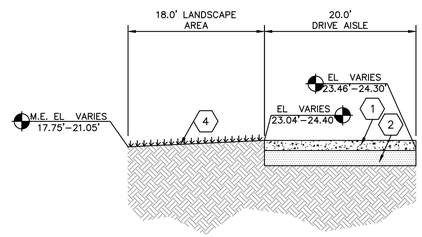

SECTION F-F

SCALE: N.T.S.

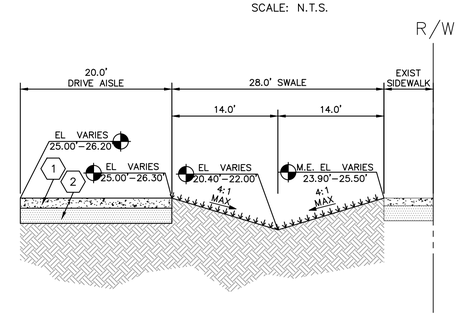

SECTION G-G

SCALE: N.T.S.

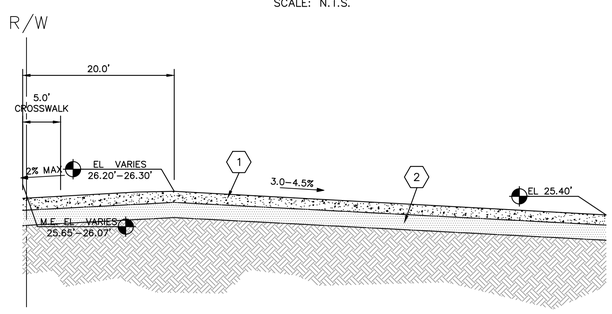

SECTION H-H

SCALE: N.T.S.

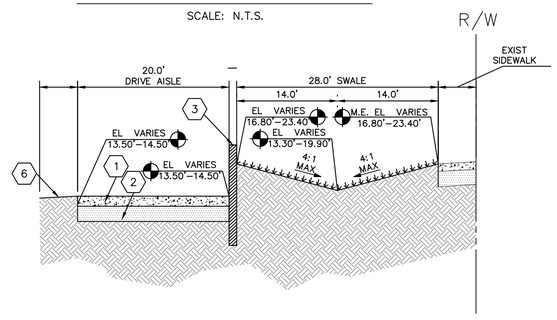

SECTION I-I

SCALE: N.T.S.

PAVING LEGEND

1. 8"-3000 PSI REINFORCED CONCRETE
2. 12" THICK STABILIZED SUBGRADE (MIN CBR 20) (COMPACTED TO 95% MAX DRY DENSITY ASTM D 1557)
3. RETAINING WALL (SEE STRUCTURAL SHEETS FOR DETAILS)
4. LANDSCAPE AREA (REFER TO LANDSCAPE PLANS FOR DETAILS)
5. VALLEY GUTTER
6. PROP 57 STONE WITH GEOFABRIC

KEY MAP

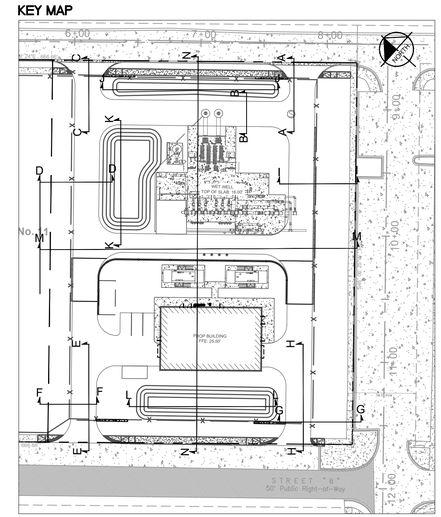

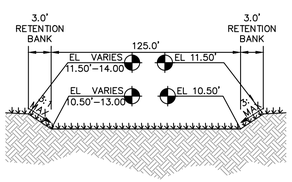

SECTION J-J

SCALE: N.T.S.

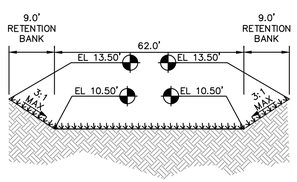

SECTION K-K

SCALE: N.T.S.

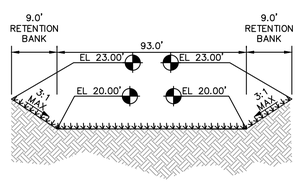

SECTION L-L

SCALE: N.T.S.

CONSTRUCTION DOCUMENTS

No.	REVISIONS	DATE	BY

Kimley»Horn

PROFESSIONAL ENGINEER
GEORGE BALABAN, P.E.
0-51817-1B
U.S. VIRGIN ISLANDS
07/09/2026

KHA PROJECT 045826000
DATE JUNE 2026
SCALE AS SHOWN
DESIGNED BY GB
DRAWN BY JB
CHECKED BY MB

PAVING & GRADING CROSS SECTION

LBJ PUMP STATION
PREPARED FOR
VIWMA

SHEET NUMBER
C-09

Plotted By:Chaturvedi, Manas Sheet Set:FEC Layout:C-09 PAVING & GRADING CROSS SECTION June 29, 2026 04:03:12pm K:\FTL_Civil\045 Jobs\045826000 LBJ Pump Station\Design\CADD\PlanSheets\C-09 PAVING & GRADING CROSS SECTION.dwg

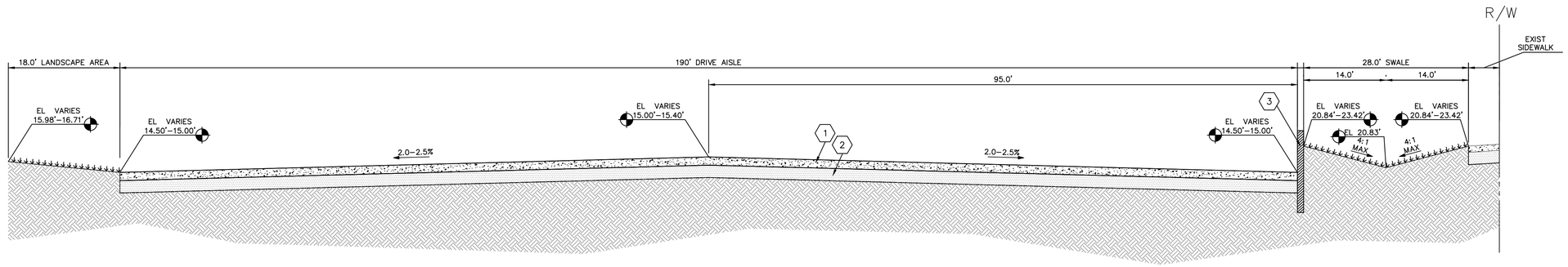

SECTION M-M

SCALE: N.T.S.

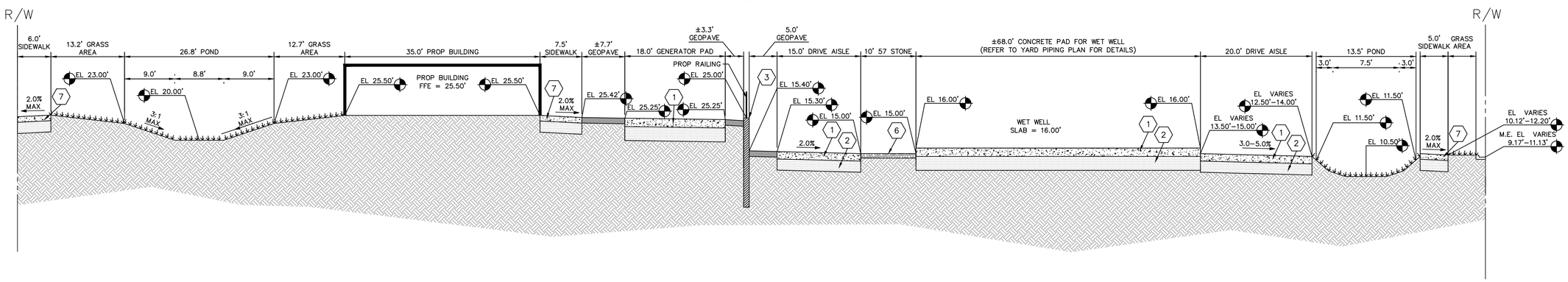

SECTION N-N

SCALE: N.T.S.

KEY MAP

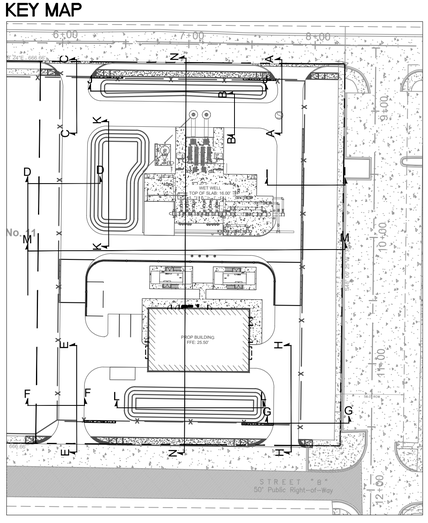

PAVING LEGEND

1. 8"–3000 PSI REINFORCED CONCRETE
2. 12" THICK STABILIZED SUBGRADE (MIN CBR 20) (COMPACTED TO 95% MAX DRY DENSITY ASTM D 1557)
3. RETAINING WALL (SEE STRUCTURAL PLANS FOR DETAILS)
4. LANDSCAPE AREA (REFER TO LANDSCAPE PLANS FOR DETAILS)
5. VALLEY GUTTER
6. PROP 57 STONE WITH GEOFABRIC
7. 4"–3000 PSI CONCRETE W/ 4" CRUSHED BASE

CONSTRUCTION DOCUMENTS

No.	REVISIONS	DATE	BY

Kimley»Horn

Sign of Quality

PROFESSIONAL ENGINEER
GEORGE BALABAN, P.E.
0-51817-1B
U.S. VIRGIN ISLANDS
06/09/2026

KHA PROJECT 045826000
DATE JUNE 2026
SCALE AS SHOWN
DESIGNED BY GB
DRAWN BY JB
CHECKED BY MB

PAVING & GRADING CROSS SECTION

LBJ PUMP STATION
PREPARED FOR VIWMA

SHEET NUMBER
C-10

Plotted By:Chaturvedi, Manas Sheet Set:FEC Layout:C-10 PAVING & GRADING CROSS SECTION June 29, 2026 04:03:19pm K:\FTL_Civil\045 Jobs\045826000 LBJ Pump Station\Design\CADD\PlanSheets\C-09 PAVING & GRADING CROSS SECTION.dwg

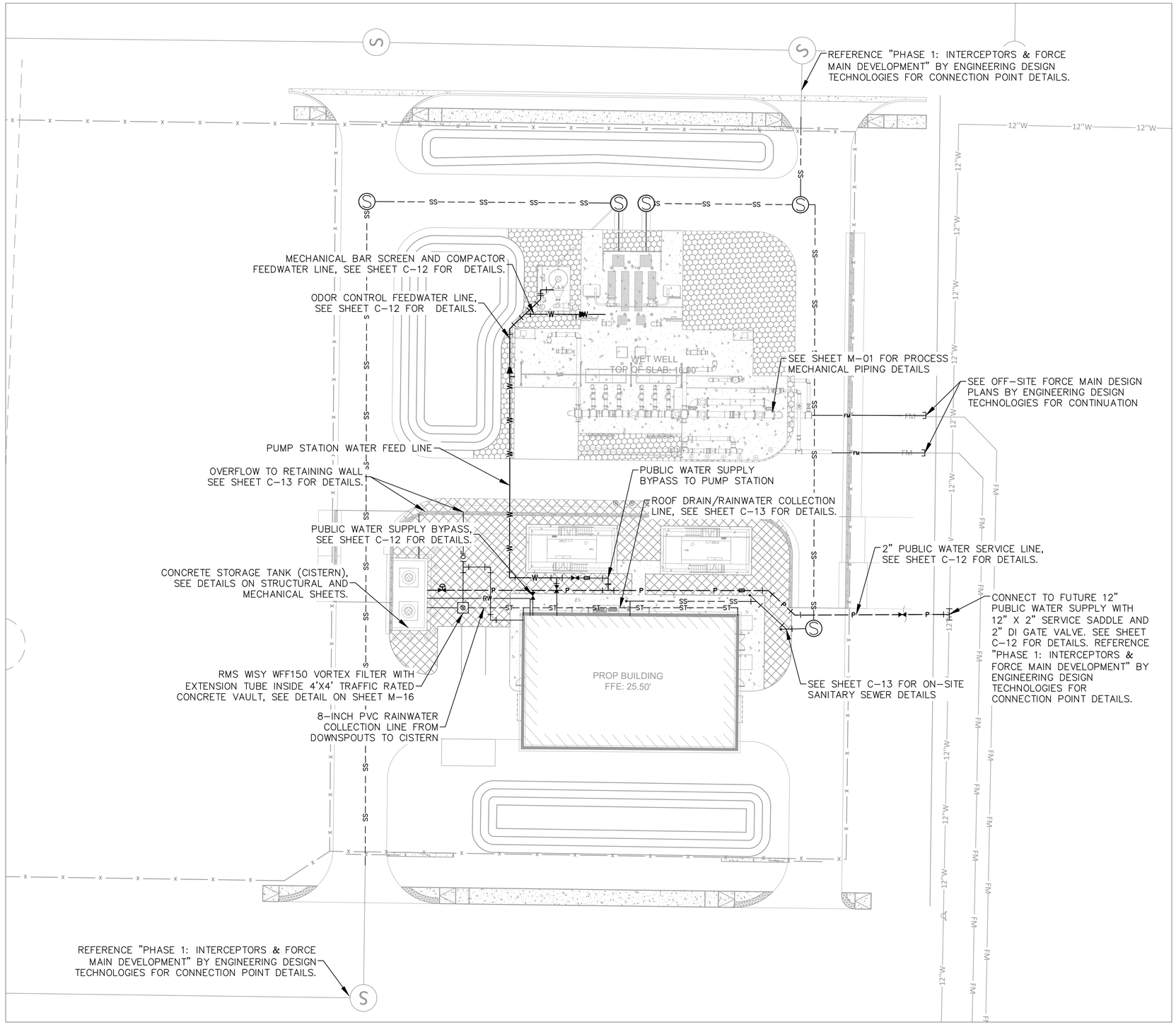

NORTH

GRAPHIC SCALE IN FEET
0 10 20 40

LEGEND

	PROPERTY LINE/RIGHT-OF-WAY
Ⓢ	PROP MANHOLE
—— SS ——	PROP SANITARY SEWER LINE
— W — W —	PROP POTABLE WATER LINE
— P —	PROP PUBLIC WATER LINE
— ST — ST —	PROP RAINWATER COLLECTION LINE
— OF —	PROP OVERFLOW LINE
Ⓥ	RMS WISY WFF150 VORTEX FILTER

NOTES:

1. ALL EXISTING UTILITIES BEING REMOVED AND/OR RELOCATED MUST REMAIN ACTIVE AND IN SERVICE UNTIL THE PROPOSED UTILITIES HAVE BEEN INSTALLED, IN SERVICE, ACCEPTED, AND ALL RELATED SERVICES FROM ALL EXISTING MAINS HAVE BEEN RECONNECTED.
2. THE CONTRACTOR IS REQUIRED TO PROTECT EXISTING UTILITIES, STRUCTURES, SIGNAGE, CURBS, ETC DURING CONSTRUCTION ACTIVITIES. CARE SHALL BE TAKEN NOT TO DISTURB OR DAMAGE SUCH ITEMS AND THE CONTRACTOR WILL BE RESPONSIBLE TO REPAIR OR RESTORE ANY DAMAGE OR DISTURBANCE.
3. CONTRACTOR SHALL VERIFY ALL EXISTING UTILITIES AND SERVICE CONNECTIONS PRIOR TO CONSTRUCTION.
4. ALL MODIFICATIONS, REMOVALS AND RELOCATIONS OF EXISTING UTILITIES SHALL BE COORDINATED WITH THE UTILITY OWNER PRIOR TO CONSTRUCTION.
5. ALL PARALLEL PAVEMENT CUTS SHALL INCLUDE FULL WIDTH RESTORATION; PERPENDICULAR PAVEMENT CUTS SHALL INCLUDE A MINIMUM TEN (10) FOOT WIDE PATCH.
6. ALL SEWER PVC PIPE TO BE PVC SDR 26. ALL WATER PVC PIPE TO BE C-900 DR-18.
7. THE PROPOSED UTILITIES SHALL BE CONSTRUCTED IN ACCORDANCE WITH THIS DESIGN DRAWING PACKAGE, VIWMA STANDARDS AND SPECIFICATIONS, AND ALL APPLICABLE LOCAL REGULATIONS.
8. PROPOSED WORK SHALL BE PERFORMED AND COMPLETED IN ACCORDANCE WITH OSHA STANDARDS AND LOCAL REQUIREMENTS.
9. OPEN EXCAVATIONS MUST BE PROTECTED IN ACCORDANCE WITH OSHA SPECIFICATIONS AND COVERED WITH APPROPRIATELY SIZED AND RATED TRENCH PLATES IF THE EXCAVATION IS NOT BACKFILLED AT THE END OF A WORK DAY.
10. WATER PIPE SHALL BE INSTALLED WITH A MINIMUM OF 18-INCHES OF COVER AND SHALL MAINTAIN A MINIMUM OF 36-INCHES OF VERTICAL AND HORIZONTAL CLEARANCE FROM ADJACENT UTILITIES UNLESS OTHERWISE SPECIFIED.
11. SEWER PIPE SHALL BE INSTALLED WITH A MINIMUM OF 18-INCHES OF COVER AND SHALL MAINTAIN A MINIMUM OF 36-INCHES OF VERTICAL AND HORIZONTAL CLEARANCE FROM ADJACENT UTILITIES UNLESS OTHERWISE SPECIFIED.
12. THE INSTALLED PIPE SHALL BE SURVEYED FOR LOCATION AND DEPTH EVERY 20 FEET ALONG THE ENTIRE ALIGNMENT. THE CONTRACTOR SHALL USE THE SURVEY INFORMATION TO GENERATE AN AS-BUILT DRAWING SET.
13. INCLUDE TRACER WIRE ON ALL UNDERGROUND UTILITIES INCLUDING SERVICE LINES AND LATERALS.
14. SEE SHEET IR-01 FOR IRRIGATION PIPING PLAN.

CONSTRUCTION DOCUMENTS

No.	REVISIONS	DATE	BY

Kimley»Horn

EDPT Sign of Quality

PROFESSIONAL ENGINEER
KELLY B. SMITH, P.E.
0-64744-1B
U.S. VIRGIN ISLANDS

KHA PROJECT 045826000	
DATE	JUNE 2026
SCALE	AS SHOWN
DESIGNED BY	KBS
DRAWN BY	MC
CHECKED BY	MTS

OVERALL YARD PIPING PLAN

LBJ PUMP STATION
PREPARED FOR
VIWMA

SHEET NUMBER
C-11

Plotted By:Chaturvedi, Manas Sheet Set:FEC Layout:C-11 OVERALL YARD PIPING PLAN June 29, 2026 01:33:50pm K:\JAX_WaterResources\045826000 - VIWMA LBJ Sewershed\CAD\PlanSheets\C-09 YARD PIPING PLAN.dwg
This document, together with the concepts and designs presented herein, as an instrument of service, is intended only for the specific purpose and client for which it was prepared. Reuse of and improper reliance on this document without written authorization and adaptation by Kimley-Horn and Associates, Inc. shall be without liability to Kimley-Horn and Associates, Inc.

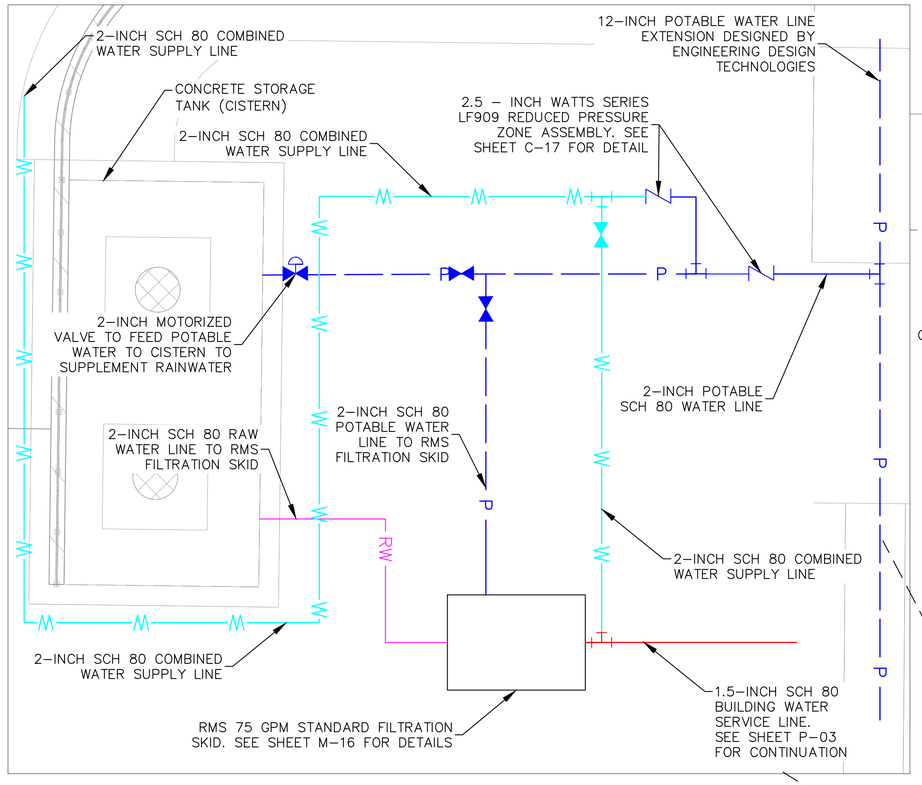

LBJ WATER SYSTEM SCHEMATIC
(NOT TO SCALE)

NOTES:

THE LBJ WATER SYSTEM IS COMPRISED OF:

1. POTABLE WATER SERVICE LINE FROM WAPA (BLUE)
2. RAINWATER COLLECTIONS LINE TO THE CISTERN
4. RMS 75 GPM FILTRATION SKID
5. RAW WATER PUMPED TO RMS 75 GPM FILTRATION SKID FROM CISTERN (MAGENTA)
6. COMBINED WATER SUPPLY LINES TO LBJ PUMP STATION/MECHANICAL EQUIPMENT (CYAN)
7. BUILDING WATER SERVICE LINE FROM RMS 75 GPM FILTRATION SKID (RED)

WATER SERVICE SCHEDULE

TYPE	LINETYPE	TO	FROM	SIZE	MATERIAL
POTABLE WATER	P	CISTERN	POTABLE WATER SUPPLY	2-INCH	SCHEDULE 80 PVC
POTABLE WATER	P	MECHANICAL ROOM	POTABLE WATER SUPPLY	2-INCH	SCHEDULE 80 PVC
RAW WATER	RW	MECHANICAL ROOM	CISTERN	2-INCH	SCHEDULE 80 PVC
COMBINED WATER	W W	ODOR CONTROL	MECHANICAL ROOM	2-INCH AND 1.5-INCH	SCHEDULE 80 PVC
COMBINED WATER	W W	COMPACTORS	MECHANICAL ROOM	2-INCH AND 1-INCH	SCHEDULE 80 PVC
RAINWATER	ST ST	CISTERN	DOWNSPOUTS	8-INCH	SCHEDULE 80 PVC

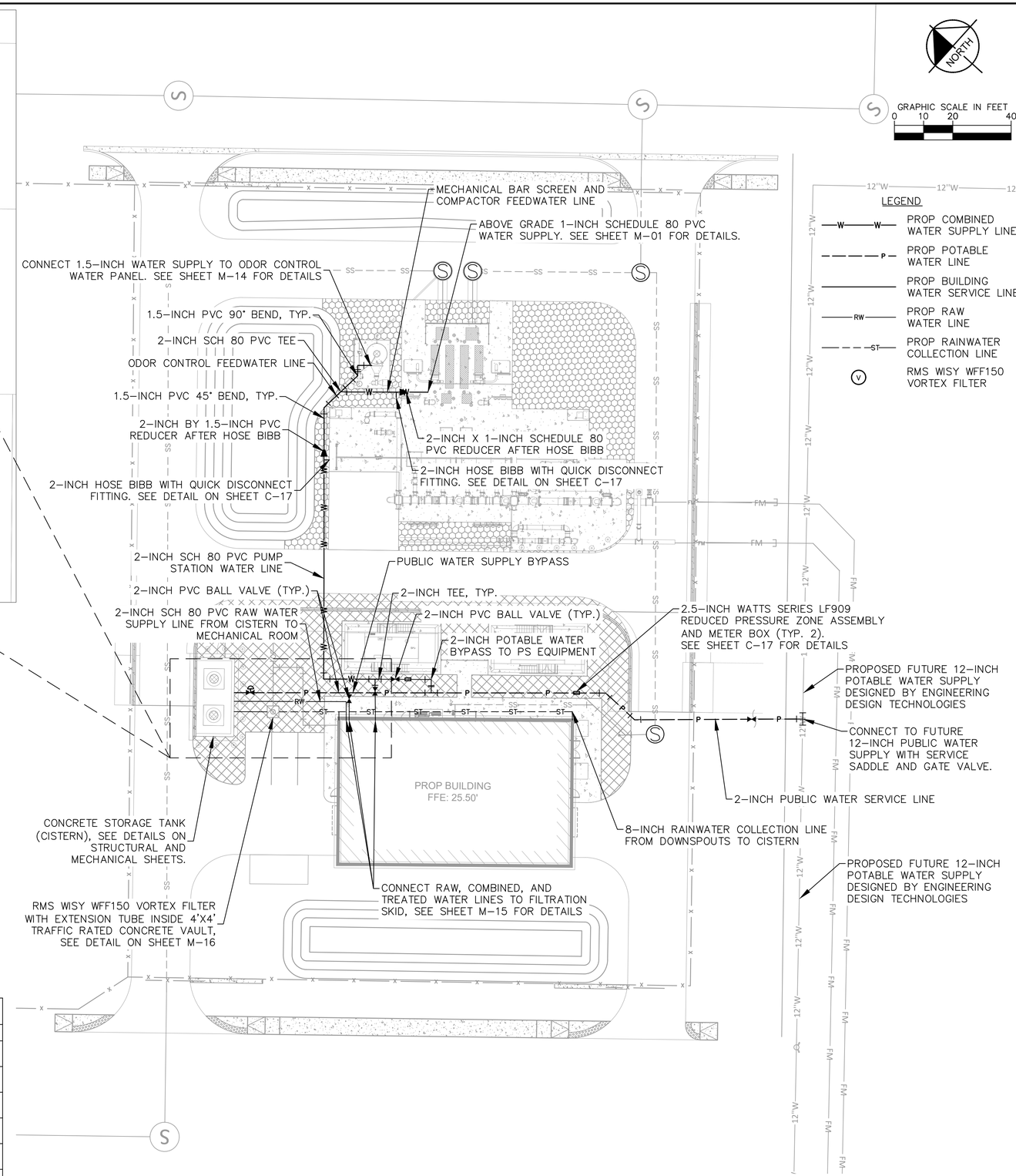

CONSTRUCTION DOCUMENTS

No.	REVISIONS	DATE	BY

Kimley»Horn

EDT Sign of Quality

PROFESSIONAL ENGINEER
KELLY B. SMITH, P.E.
0-64744-1B
U.S. VIRGIN ISLANDS

KHA PROJECT 045826000
DATE JUNE 2026
SCALE AS SHOWN
DESIGNED BY KBS
DRAWN BY MC
CHECKED BY MTS

ON-SITE WATER SERVICE PIPING PLAN

LBJ PUMP STATION PREPARED FOR VIWMA

SHEET NUMBER
C-12

Plotted By:Chaturvedi, Manas Sheet Set:FEC Layout:C-12 ON-SITE WATER SERVICE PIPING PLAN June 29, 2026 01:34:05pm K:\JAX_WaterResources\045826000 - VIWMA LBJ Sewershed\CAD\PlanSheets\C-09 YARD PIPING PLAN.dwg
This document, together with the concepts and designs presented herein, as an instrument of service, is intended only for the specific purpose and client for which it was prepared. Reuse of and improper reliance on this document without written authorization and adaptation by Kimley-Horn and Associates, Inc. shall be without liability to Kimley-Horn and Associates, Inc.

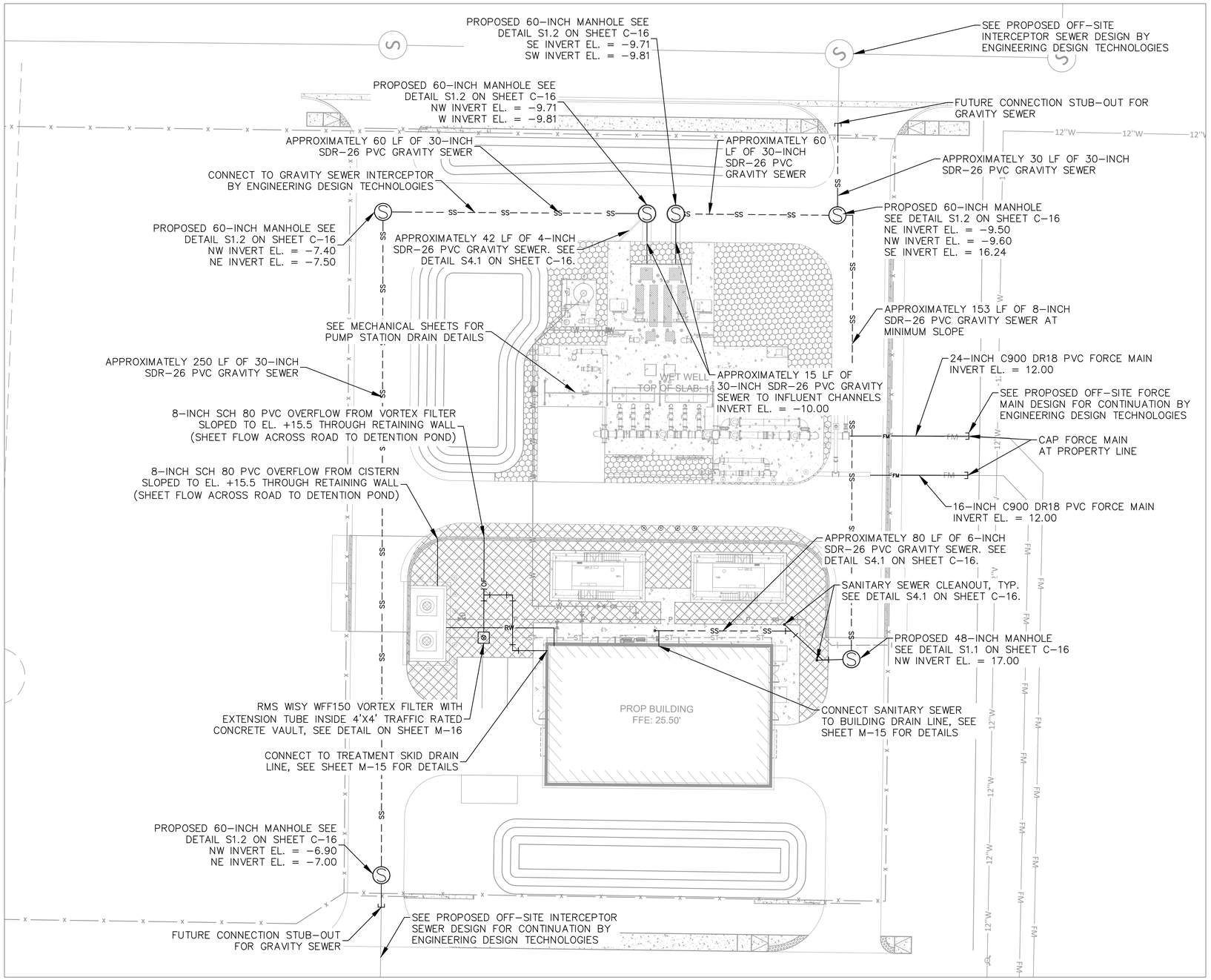

NORTH

GRAPHIC SCALE IN FEET
0 10 20 40

LEGEND

	PROPERTY LINE/RIGHT-OF-WAY
Ⓢ	PROP MANHOLE
—— SS ——	PROP SANITARY SEWER LINE
—— OF ——	PROP OVERFLOW LINE
—— FM ——	PROP FORCE MAIN

NOTES:

1. POTABLE WATER SERVICE LINE FROM WAPA (BLUE)
2. RAINWATER COLLECTIONS LINE TO THE CISTERN

STORM AND SEWER SERVICE SCHEDULE

TYPE	TO	FROM	SIZE	MATERIAL
SEWER	SSMH	BUILDING	6-INCH	SDR-26 PVC
SEWER	SSMH	ODOR CONTROL	6-INCH	SDR-26 PVC
SEWER FORCE MAIN	OFF-SITE	PUMP STATION DISCHARGE PIPING	24-INCH	C900 DR18 PVC
STORM	DETENTION POND	VORTEX FILTER	8-INCH	SCHEDULE 80 PVC
STORM	DETENTION POND	CISTERN	8-INCH	SCHEDULE 80 PVC

CONSTRUCTION DOCUMENTS

No.	REVISIONS	DATE	BY

Kimley»Horn

PROFESSIONAL ENGINEER
KELLY B. SMITH, P.E.
0-64744-1B
U.S. VIRGIN ISLANDS

KHA PROJECT 045826000
DATE JUNE 2026
SCALE AS SHOWN
DESIGNED BY KBS
DRAWN BY MC
CHECKED BY MTS

ON-SITE SANITARY AND DRAIN PIPING PLAN

LBJ PUMP STATION
PREPARED FOR
VIWMA

SHEET NUMBER
C-13

Plotted By:Chaturvedi, Manas Sheet Set:FEC Layout:C-13 ON-SITE SANITARY AND DRAIN PIPING PLAN June 29, 2026 03:43:48pm K:\JAX WaterResources\045826000 - VIWMA LBJ Sewershed\CAD\PlanSheets\C-09 YARD PIPING PLAN.dwg
This document, together with the concepts and designs presented herein, as an instrument of service, is intended only for the specific purpose and client for which it was prepared. Reuse of and improper reliance on this document without written authorization and adaptation by Kimley-Horn and Associates, Inc. shall be without liability to Kimley-Horn and Associates, Inc.

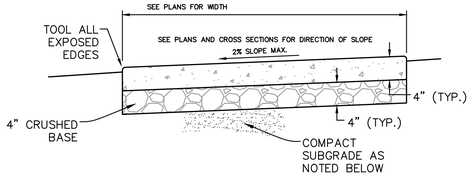

NOTES:

1. PROVIDE EXPANSION JOINTS BETWEEN SIDEWALK AND CURB OR AT ANY OTHER RIGID STRUCTURE.
2. EXPANSION JOINTS SHALL BE PROVIDED AT 120 FT. MAXIMUM SPACING AND BETWEEN ANY NEW/OLD TRANSITIONS.
3. ULTIMATE COMPRESSIVE STRENGTH OF CONCRETE SHALL BE 3,000 P.S.I. @ 28 DAYS FOR SIDEWALKS.
4. MINIMUM THICKNESS OF SIDEWALK SHALL BE 4" THICK CONCRETE.
5. FOR SIDEWALKS OR DRIVEWAYS WITHIN R.O.W., COMPACT SUBGRADE TO 98% OF MAXIMUM DENSITY AS DETERMINED BY ASTM1557. COMPACTION OUTSIDE R.O.W. MAY BE 95% OF MAXIMUM DENSITY.URS.

1 CONCRETE SIDEWALK DETAIL
NOT TO SCALE

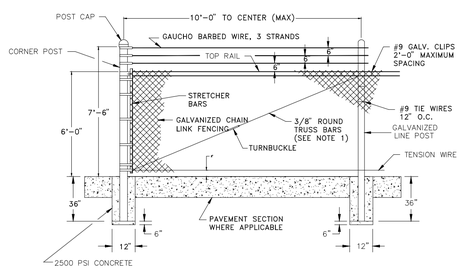

3 FENCE DETAIL
NOT TO SCALE

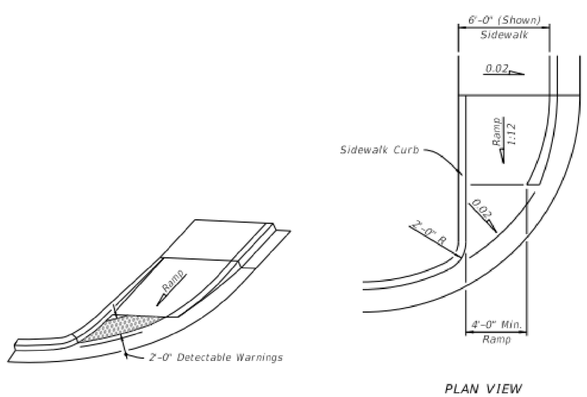

5 RIGHT OF WAY RAMP WITH DETECTABLE WARNING
NOT TO SCALE

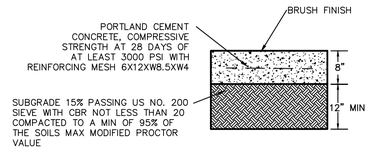

2 HEAVY VEHICLE ACCESS AREAS RIGID PAVEMENT SECTION
NOT TO SCALE

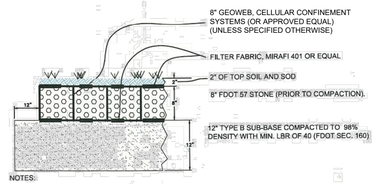

NOTES:
1. 57 STONE TO MEET TERRITORIAL REGULATIONS FOR STANDARD SIZES OR COURSE AGGREGATE.
2. STABILIZED SUBGRADE TO USE TYPE "B" STABILIZATION.

4 GEOPAVE DETAIL
NOT TO SCALE

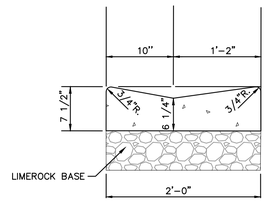

6 2' VALLEY GUTTER
NOT TO SCALE

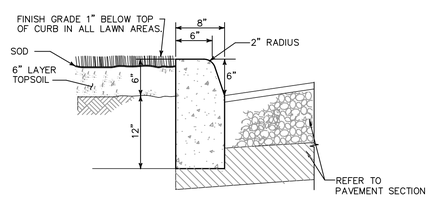

7 TYPE "D" CURB
NOT TO SCALE

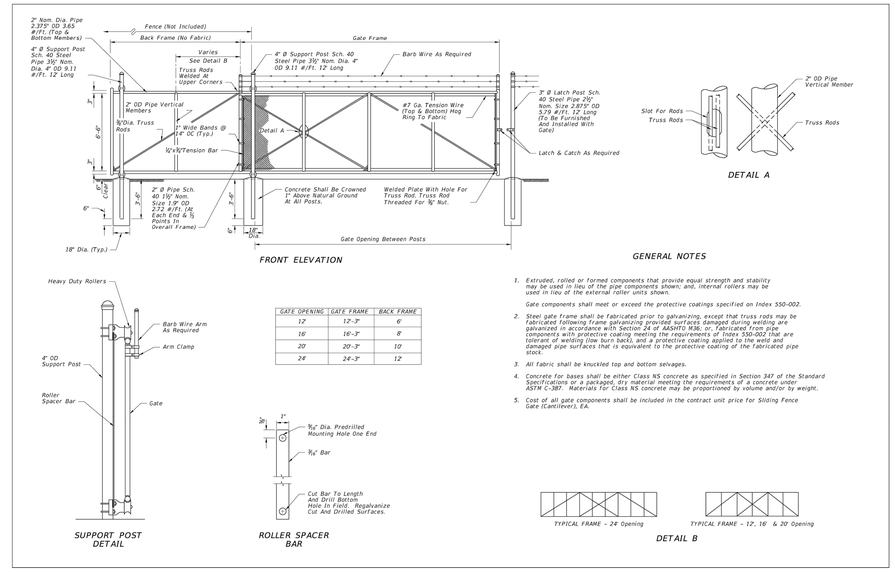

GATE OPENING	GATE FRAME	BACK FRAME
12'	12'-3"	6'
16'	16'-3"	8'
20'	20'-3"	10'
24'	24'-3"	12'

GENERAL NOTES

1. Extruded, rolled or formed components that provide equal strength and stability may be used in lieu of the pipe components shown; and, internal rollers may be used in lieu of the external roller units shown.

   Gate components shall meet or exceed the protective coatings specified on Index 550-002.
2. Steel gate frame shall be fabricated prior to galvanizing, except that truss rods may be fabricated following frame galvanizing provided surfaces damaged during welding are galvanized in accordance with Section 24 of AASHTO M36; or, fabricated from pipe components with protective coating meeting the requirements of Index 550-002 that are tolerant of welding (low burn back), and a protective coating applied to the weld and damaged pipe surfaces that is equivalent to the protective coating of the fabricated pipe stock.
3. All fabric shall be knuckled top and bottom selvages.
4. Concrete for bases shall be either Class NS concrete as specified in Section 347 of the Standard Specifications or a packaged, dry material meeting the requirements of a concrete under ASTM C-387. Materials for Class NS concrete may be proportioned by volume and/or by weight.
5. Cost of all gate components shall be included in the contract unit price for Sliding Fence Gate (Cantilever), EA.

8 CANTILEVER SLIDE GATE AND FENCE
NOT TO SCALE

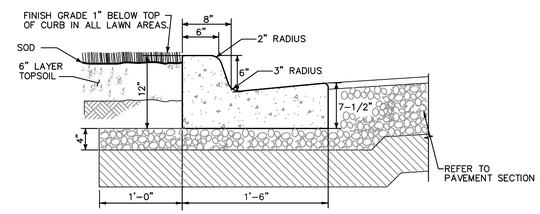

NOTES:
1. GUTTER SLOPE IS TO MATCH THE PAVEMENT SLOPE WHEN USED ON THE HIGH SIDE OF THE PAVEMENT.

9 TYPE 'F' CURB
NOT TO SCALE

CONSTRUCTION DOCUMENTS

No.	REVISIONS	DATE	BY

Kimley»Horn

PROFESSIONAL ENGINEER
GEORGE BALABAN, P.E.
0-51817-1B
U.S. VIRGIN ISLANDS
07/09/2026

KHA PROJECT 045826000
DATE JUNE 2026
SCALE AS SHOWN
DESIGNED BY GB
DRAWN BY JB
CHECKED BY MB

CIVIL DETAILS

LBJ PUMP STATION
PREPARED FOR
VIWMA

SHEET NUMBER
C-14

Plotted By:Chaturvedi, Manas Sheet Set:FEC Layout:C-14 CIVIL DETAILS June 29, 2026 04:03:44pm K:\FTL_Civil\045 Jobs\045826000 LBJ Pump Station\Design\CADD\PlanSheets\C-12 CIVIL DETAILS.dwg

GENERAL NOTES:

1. Work this Index with Index 425-001 and Index 425-010.
2. Chamfer all exposed edges and corners ¾" chamfer or tooled to ½" radius.
3. All reinforcing is Grade 60 bars with 2" minimum. cover unless otherwise noted. Cut or bend bars for 1½" clearance around pipe opening. Provide one additional #4 bar above and at each side of pipe opening.
4. Use Concrete Apron on inlets without slots and inlets with non-traversable slots only when called for in the Plans.
5. Quantities are for informational and estimating purposes only.
6. Slots are not permitted on sides with grate seats.

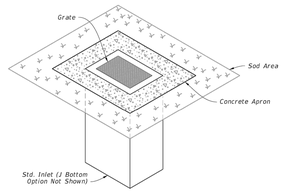

DITCH BOTTOM INLET TYPE C
TRAVERSABLE
(Without Slot - Type D, E, and H Similar, Pipe Connection Not Shown)

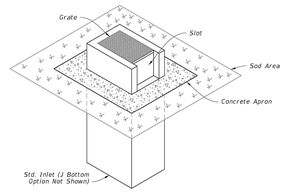

DITCH BOTTOM INLET TYPE C
NON-TRAVERSABLE
(Slot > 7" Shown - Type D, E, and H Similar, Pipe Connection Not Shown)

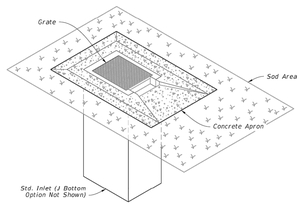

DITCH BOTTOM INLET TYPE C
TRAVERSABLE
(Single Slot < 7" Shown, Double Slot, Type D, and E Similar, Pipe Connection Not Shown)

TABLE OF CONTENTS:

Sheet	Description
1	General Notes and Contents
2	Type C - Dimensional, Reinforcing, and Grate Details
3	Type D - Dimensional, Reinforcing, and Grate Details
4	Type E - Dimensional, Reinforcing, and Grate Details
5	Type H (2 & 3 Grate) - Dimensional, Reinforcing, and Steel Grate Details
6	Type H (4 Grate) - Dimensional, Reinforcing, and Steel Grate Details
7	Cast Iron Grate Details
8	Non-Traversable Inlet Details
9	Traversable Inlet Without Slot Details
10	Traversable Inlet With Slot Details
11	Case 1 - Add Traversable Slots to Existing Inlets
12	Case 2 - Add Traversable Slots (Partial) to Existing Inlets
13	Case 3 - Add Traversable Slots (Partial) to Existing Inlets and Ditch Block
14	Alternate A Structure Bottom - Top Slab Details

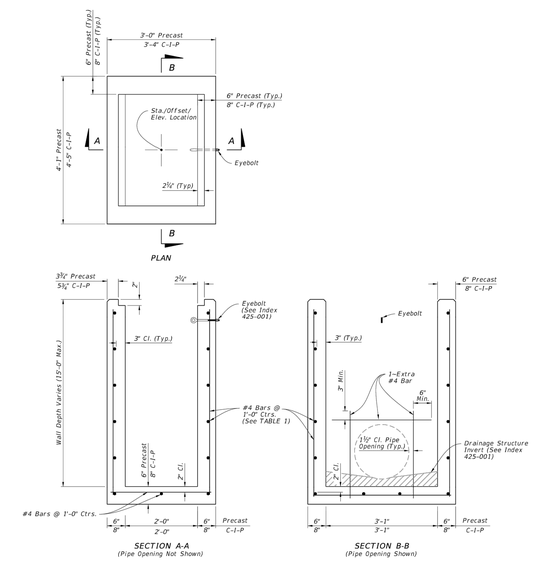

DIMENSIONAL AND REINFORCING DETAILS

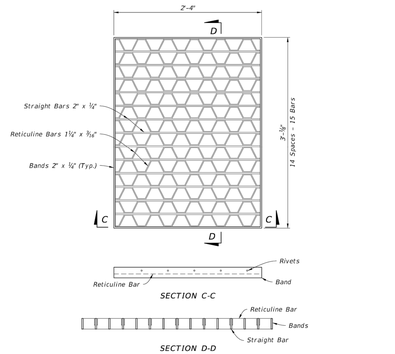

STEEL GRATE DETAIL
(Approx. 104 Lbs. - See Sheet 7 For Cast Iron Grates)

TABLE 1
HORIZONTAL WALL REINFORCING SCHEDULE

WALL DEPTH	SCHEDULE	AREA (in²/ft.)	MAX. SPACING BARS	MAX. SPACING WWF
0' - 15'	A12	0.20	12"	8"

NOTES:

1. Grate, Concrete Apron, and Sod not shown on structure detail.
2. See Sheet 8, 9, and 10 for Concrete Apron and Sodded Area details.

TYPE C - DIMENSIONAL, REINFORCING, AND STEEL GRATE DETAILS

NOTES:

1. Steel Grates are required on inlets with traversable slots and on Inlets where bicycle traffic is anticipated.
2. Cast Iron Grates are not permitted on Inlet Type D.

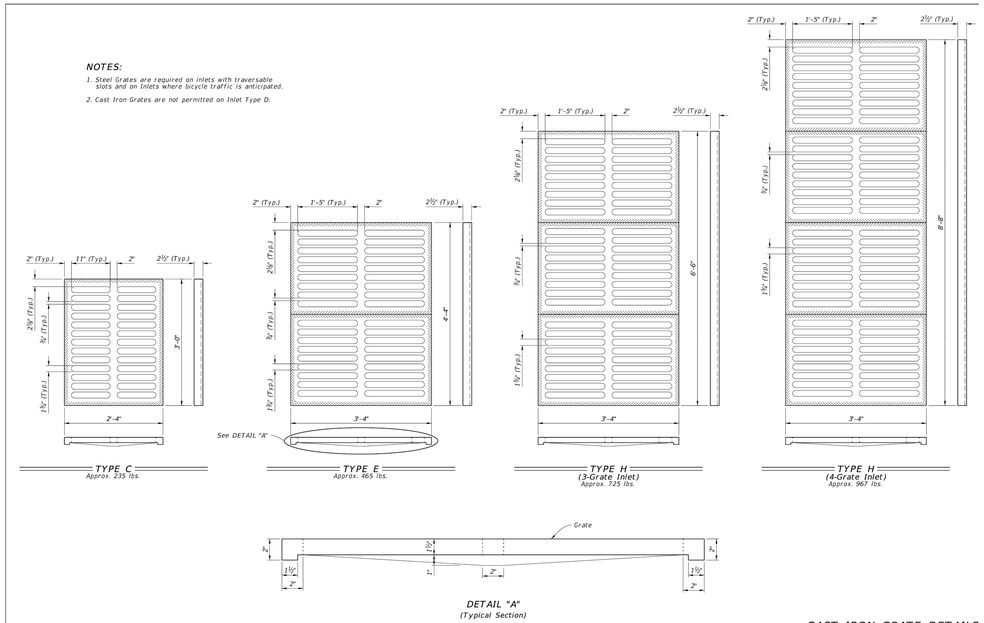

CAST IRON GRATE DETAILS

TABLE 6
SOD ONLY QUANTITIES

Inlet Type	Sod SY
C	6
D	6
E	7
H	8

TABLE 7
SOD AND CONCRETE APRON QUANTITIES

Inlet Type	Sod SY	Conc. CY
C	8	0.30
D	9	0.36
E	9	0.37
H	11	0.45

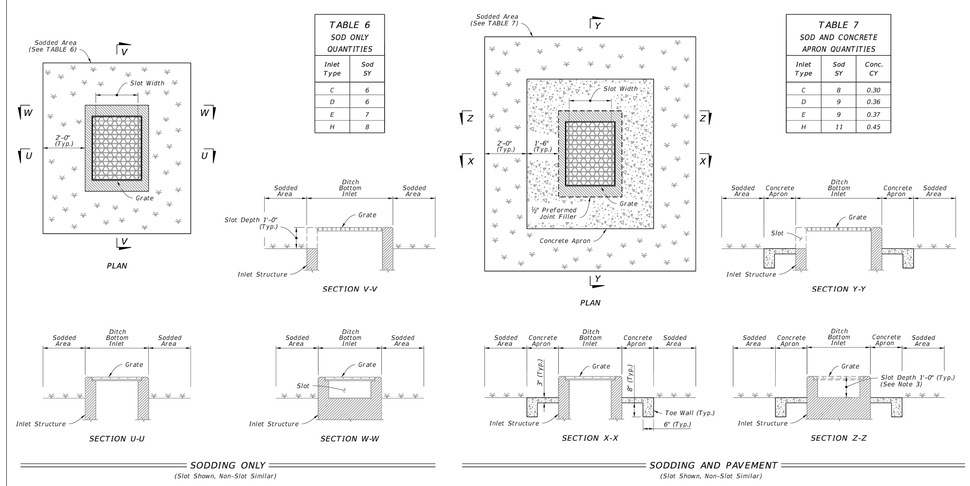

SODDING ONLY
(Slot Shown, Non-Slot Similar)

SODDING AND PAVEMENT
(Slot Shown, Non-Slot Similar)

NOTES:

1. Concrete Apron installed only where called for in the Plans.
2. Sod always required.

NON-TRAVERSABLE INLET DETAILS

(10) DITCH BOTTOM INLET TYPE C - NON-TRAVERSABLE
NOT TO SCALE

CONSTRUCTION DOCUMENTS

No.	REVISIONS	DATE	BY

Kimley»Horn

PROFESSIONAL ENGINEER
GEORGE BALABAN, P.E.
0-51817-1B
U.S. VIRGIN ISLANDS
07/09/2026

KHA PROJECT	045826000
DATE	JUNE 2026
SCALE	AS SHOWN
DESIGNED BY	GB
DRAWN BY	JB
CHECKED BY	MB

CIVIL DETAILS

LBJ PUMP STATION
PREPARED FOR
VIWMA

SHEET NUMBER
C-15

Plotted By:Chaturvedi, Manas Sheet Set:FEC Layout:C-15 CIVIL DETAILS June 29, 2026 04:04:11pm K:\FTL_Civil\045 Jobs\045826000 LBJ Pump Station\Design\CADD\PlanSheets\C-12 CIVIL DETAILS.dwg

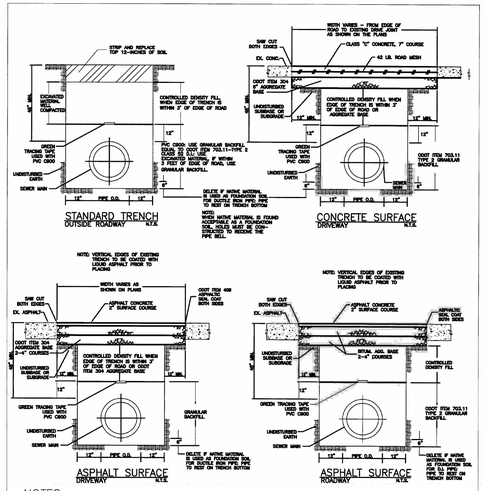

NOTES:

1. "PAVEMENT" AS USED IN THIS DETAIL SHALL ALSO MEAN SIDEWALKS, CURBS, SLABS & OTHER GRADED STRUCTURES.
2. ALL BACKFILL & BEDDING IS TO BE COMPACTED AS CALLED FOR IN THE SPECIFICATIONS.
3. BEDDING AND BACKFILL MATERIALS SHALL BE IN ACCORDANCE WITH THE SPECIFICATION FOR THE SPECIFIC PIPE MATERIAL BEING INSTALLED.
4. 6' LONG CLAY BULKHEADS TO BE INSTALLED AROUND PIPE EVERY 100'

NO SCALE

VIRGIN ISLANDS WASTE MANAGEMENT AUTHORITY	SANITARY SEWER TRENCH SECTIONS	DRAWING NO. S2.1
APPROVED _____ DATE _____		

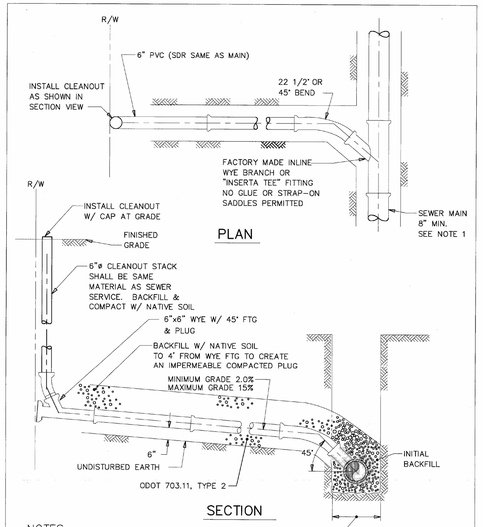

NOTES:

1. SEWER LATERAL PIPE SHALL BE THE SAME MATERIAL AS THE MAIN (PVC SDR 35,or26)
2. DURING CONSTRUCTION OF THE SEWER MAIN AND LATERALS THE CLEANOUT SHALL BE BURIED APPROXIMATELY 3 FEET WITH A 2" BY 2" POLE SET ON THE BACK SIDE OF THE CLEAN OUT. WHEN THE STUCTURE IS CONNECTED, THE CLEANOUT SHALL BE BROUGHT TO GRADE AS DETAILED.

NO SCALE

VIRGIN ISLANDS WASTE MANAGEMENT AUTHORITY	SEWER LATERAL INSTALLATION	DRAWING NO. S3.1
APPROVED _____ DATE _____		

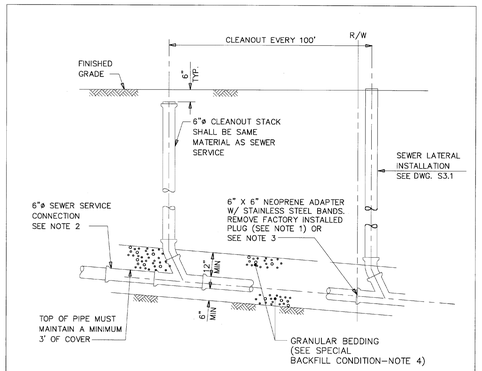

NOTES:

1. SEWER SERVICE CONNECTION TO SEWER LATERAL SHALL BE BY MEANS OF FLEXIBLE PIPE CONNECTORS (SHIELDED COUPLING AND DONUT TYPE) WHEN JOINING PIPES OF DIFFERENT MATERIAL.
2. SEWER SERVICE PIPE MATERIAL SHALL BE ANY OF THE FOLLOWING: PVC SCH-40 SOLID WALL, ASTM-D3034 WITH GLUED JOINTS, PVC SDR 35, OR (WHEN SEWER IS 15' OR DEEPER) PVC SDR 26
3. IN LIEU OF CONNECTING TO THE WYE FITTING AT THE R/W LINE, THE BUILDING SEWER MAY BE CONNECTED DIRECTLY TO THE 6" CLEANOUT PIPE, USING THE APPROPRIATE FITTINGS AS EXPLAINED IN NOTE 1.
4. AT A DISTANCE APPROXIMATELY 20' FROM THE STRUCTURE NATIVE SOIL (IN LIEU OF ODOT 703.11) WILL BE USED AS BACKFILL FOR APPROXIMATELY 4' TO CREATE AN IMPERMEABLE COMPACTED PLUG.

NO SCALE

VIRGIN ISLANDS WASTE MANAGEMENT AUTHORITY	COMMERCIAL SEWER SERVICE INSTALLATION	DRAWING NO. S4.1
APPROVED _____ DATE _____		

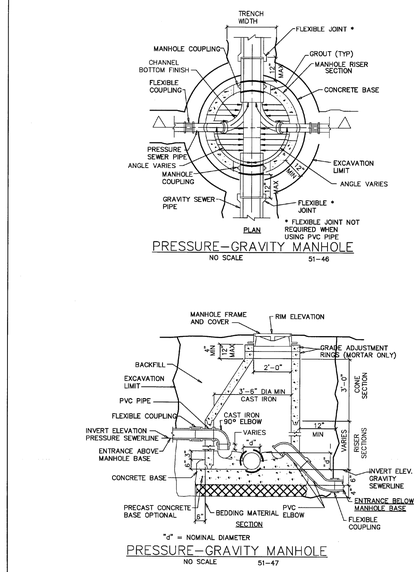

VIRGIN ISLANDS WASTE MANAGEMENT AUTHORITY	PRESSURE GRAVITY MANHOLE	DRAWING NO. S7.0
APPROVED _____ DATE _____		

NOTE:

FLEXIBLE BUTYL RUBBER SEALANT EQUAL TO CONSEAL TYPE CS-302 SHALL BE USED TO: SEAL CASTING TO MANHOLE, TO SEAL ADJUSTING RINGS TOGETHER AND TO RISERS, AND TO SEAL MANHOLE RISER JOINTS. THE SEALANT MUST BE APPLIED TO THE OUTSIDE AND INSIDE HORIZONTAL PORTION OF EACH MANHOLE JOINT.

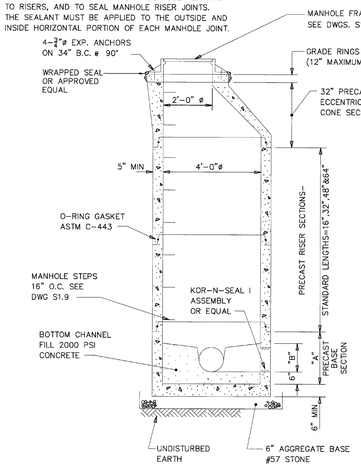

"A" DIMENSION	SEWER SIZE
24"	8" & 10"
30"	12" & 15"
38"	18"

"B" DIMENSION	SEWER SIZE
PIPE ID + 2"	8",10"&12"
1/2 PIPE ID + 2"	15" & LARGER

NO SCALE

VIRGIN ISLANDS WASTE MANAGEMENT AUTHORITY	STANDARD MANHOLE FOR SEWERS 8" TO 18"	DRAWING NO. S1.1
APPROVED _____ DATE _____		

NOTE:

FLEXIBLE BUTYL RUBBER SEALANT EQUAL TO CONSEAL TYPE CS-302 SHALL BE USED TO: SEAL CASTING TO MANHOLE, SEAL ADJUSTING RINGS TOGETHER AND TO RISERS, AND TO SEAL MANHOLE RISER JOINTS. THE SEALANT MUST BE APPLIED TO THE OUTSIDE AND INSIDE HORIZONTAL PORTION OF EACH MANHOLE JOINT.

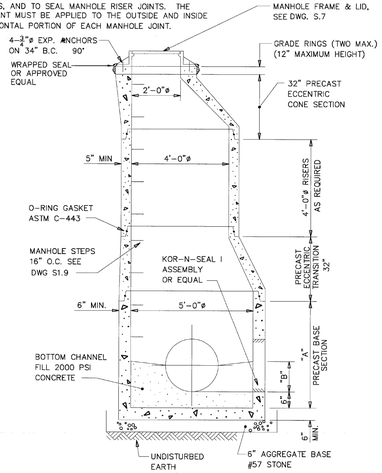

"A" DIMENSION	SEWER SIZE
42"	21" - 27"
58"	30" - 36"

"B" DIMENSION	SEWER SIZE
1/2 PIPE ID + 2"	ALL

NO SCALE

VIRGIN ISLANDS WASTE MANAGEMENT AUTHORITY	STANDARD MANHOLE FOR SEWERS 21" TO 36"	DRAWING NO. S1.2
APPROVED _____ DATE _____		

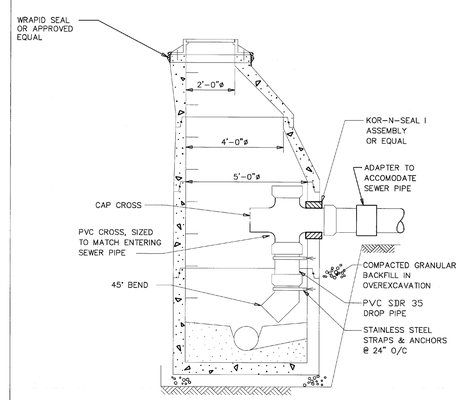

SEWER PIPE SIZE	DROP PIPE SIZE
8"	8"
10"	10"
12"	12"
15" & OVER	12" UNLESS OTHERWISE APPROVED

NOTES:

1. IN LIEU OF THE DROP STRUCTURE SHOWN, A RELINER BRAND INSIDE DROP SYSTEM MAY BE USED.
2. ALL OTHER CHARACTERISTICS ARE SIMILAR TO THE STANDARD MANHOLES. SEE DWGS. S1.1-S1.3.

NO SCALE

VIRGIN ISLANDS WASTE MANAGEMENT AUTHORITY	INSIDE DROP MANHOLE	DRAWING NO. S1.4
APPROVED _____ DATE _____		

No.	REVISIONS	DATE	BY

Kimley»Horn

EDPT Sign of Quality

PROFESSIONAL ENGINEER
KELLY B. SMITH, P.E.
0-64744-1B
U.S. VIRGIN ISLANDS

KHA PROJECT 045826000	
DATE	JUNE 2026
SCALE	AS SHOWN
DESIGNED BY	KBS
DRAWN BY	MC
CHECKED BY	MTS

CIVIL DETAILS

LBJ PUMP STATION
PREPARED FOR
VIWMA

CONSTRUCTION DOCUMENTS

SHEET NUMBER
C-16

Plotted By:Chaturvedi, Manas Sheet Set:FEC Layout:C-14 CIVIL DETAILS June 24, 2026 01:17:36pm K:\VIA_WaterResources\045826000 - VIWMA LBJ Sewershed\CAD\PlanSheets\C-10 CIVIL DETAILS.dwg
This document, together with the concepts and designs presented herein, as an instrument of service, is intended only for the specific purpose and client for which it was prepared. Reuse of and improper reliance on this document without written authorization and adaptation by Kimley-Horn and Associates, Inc. shall be without liability to Kimley-Horn and Associates, Inc.

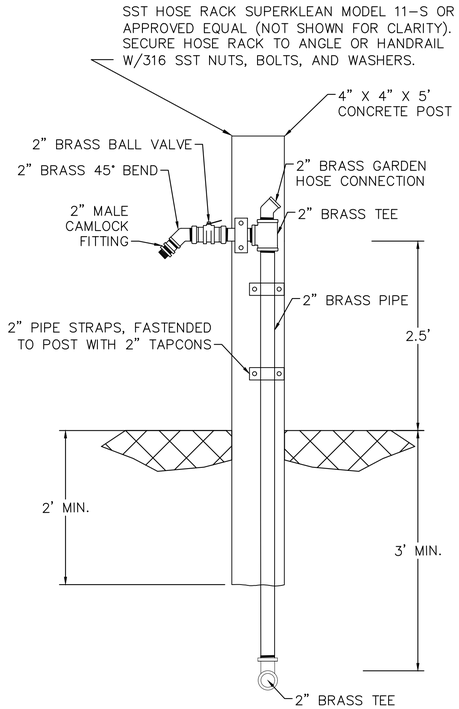

2" HOSE BIBB DETAIL

N.T.S.

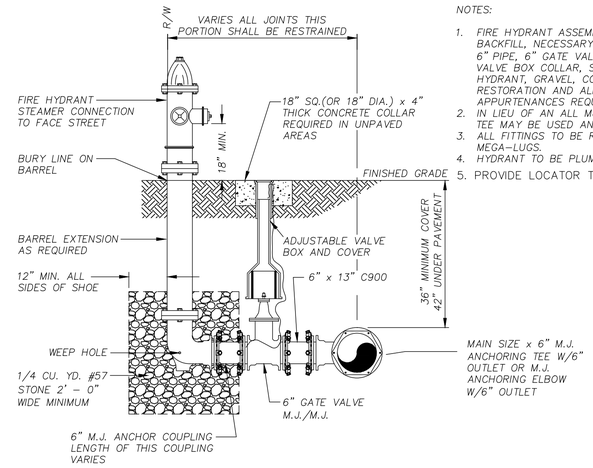

NOTES:

1. FIRE HYDRANT ASSEMBLIES INCLUDE EXCAVATION, BACKFILL, NECESSARY SHORING AND SHEETING, 6" PIPE, 6" GATE VALVE AND VALVE BOX, VALVE BOX COLLAR, SUPPORTING BRICKS, FIRE HYDRANT, GRAVEL, COMPLETE SURFACE RESTORATION AND ALL OTHER WORK AND APPURTENANCES REQUIRED.
2. IN LIEU OF AN ALL MJ TEE, A HYDRANT ANCHOR TEE MAY BE USED AND SPOOL PIECE ELIMINATED.
3. ALL FITTINGS TO BE RESTRAINED WITH MEGA-LUGS.
4. HYDRANT TO BE PLUMB AND LEVEL.
5. PROVIDE LOCATOR TEST STATION IN VALVE BOX

FIRE HYDRANT DETAIL

N.T.S.

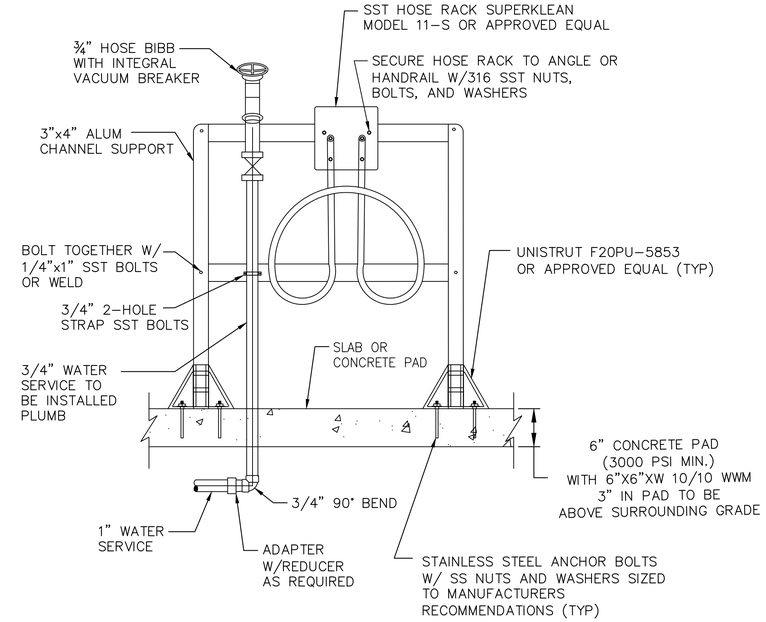

¾" HOSE BIBB DETAIL

N.T.S.

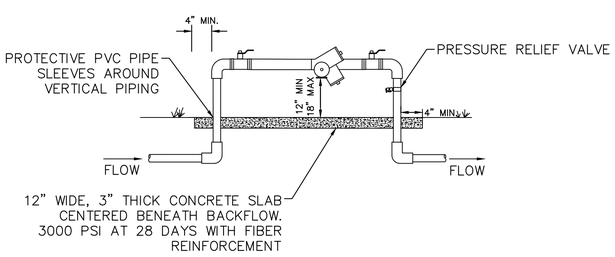

BACKFLOW PREVENTER DETAIL

N.T.S.

Dimensions — Weights

The valve can be furnished with two OSY or two NRS shutoffs. The relief valve section is furnished standardly and reversible for implementation on either side.

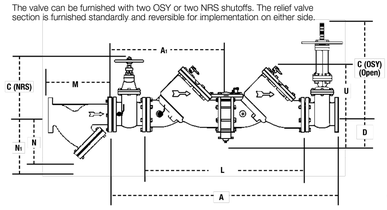

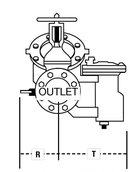

Quarter-turn (QT) Valve

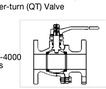

Watts Series G-4000 Ball Valves

SIZE	DIMENSIONS																						WEIGHT			
	A		A1		C clearance for check (OSY)*		C clearance for check (NRS)		D		L		U		R		R (QT)		T		NRS		OSY		QT	
in.	in.	mm	in.	mm	in.	mm	in.	mm	in.	mm	in.	mm	in.	mm	in.	mm	in.	mm	in.	mm	lb	kg	lb	kg	lb	kg
2½	41½	1053	20¼	527	16⅜	416	9⅜	238	5¼	133	26⅛	669	11	279	4	102	16	406	9⅛	230	195	88.4	198	89.8	182	82.6
3	42½	1079	21¼	539	18⅞	479	10¼	260	5¼	133	26⅛	669	11	279	5	127	16	406	9⅛	230	225	102	230	104	190	86
4	55⅛	1405	27⅞	702	22¼	578	12⅛	310	6	152	37⅛	944	14	356	6	152	19¼	502	14⅛	365	455	206	470	213	352	160
6	65⅞	1672	33	836	30⅛	765	16	406	6	152	44⅞	1134	16	406	11	279	26	660	14⅛	365	718	326	798	362	762	346
8	78⅞	1995	39⅞	998	37⅞	959	19⅞	506	9⅛	248	55⅞	1404	21	533	11⅛	286	11⅛	286	19¼	489	1350	612	1456	660	2286	1037
10	93⅛	2376	46⅛	1198	45⅞	1162	23⅞	605	9⅛	248	67⅞	1709	21	533	12⅛	318	12⅛	318	21	533	2160	980	2230	1011	3716	1685

*UL Classified/FM Approved backflow preventers must include UL Classified/FM Approved OSY gate valves.

Strainer Dimensions

SIZE	DIMENSIONS						WEIGHT	
	M		N1†		N			
in.	in.	mm	in.	mm	in.	mm	lb	kg
2½	10	254	10	254	6½	165	28	12.7
3	10¼	257	10	254	7	178	34	15.4
4	12⅛	308	12	305	8¼	210	60	27
6	18½	470	20	508	13½	343	133	60
8	21⅝	549	22¾	578	15½	394	247	112
10	26	660	28	711	18½	470	370	168

† Dimension required for screen removal.

Air Gap Dimensions

When installing a drain line on Series 909 backflow preventers that are installed horizontally, use Series 909 AG air gaps. For flange size backflow preventers installed vertically (flow down), a fabricated air gap is recommended.

IRON BODY	ORDERING	ASSEMBLY	DIMENSIONS						WEIGHT	
Model	Code	Size & Series	A		B		C			
			in.	mm	in.	mm	in.	mm	lb	kg
909AG-F	881378	1¼" – 3" 009/909 1¼" – 2" 009 M1 2" 009 M2	4⅛	111	6¾	171	2	51	3.25	1.47
909AG-K	881385	4" – 6" 909 8" – 10" 909 M1	6⅜	162	9⅝	244	3	76	6.25	2.83
909AG-M	881387	8" – 10" 909	7⅜	187	11¼	286	4	102	15.5	7.03

REDUCED PRESSURE ZONE ASSEMBLY DETAIL

N.T.S.

CONSTRUCTION DOCUMENTS

No.	REVISIONS	DATE	BY

Kimley»Horn

EDT Sign of Quality

PROFESSIONAL ENGINEER
KELLY B. SMITH, P.E.
0-64744-1B
U.S. VIRGIN ISLANDS

KHA PROJECT 045826000
DATE JUNE 2026
SCALE AS SHOWN
DESIGNED BY KBS
DRAWN BY MC
CHECKED BY MTS

CIVIL DETAILS

LBJ PUMP STATION
PREPARED FOR
VIWMA

SHEET NUMBER
C-17

Plotted By:Chaturvedi, Manas Sheet Set:FEC Layout:C-17 CIVIL DETAILS June 24, 2026 01:17:51pm K:\JAX_WaterResources\045826000 - VIWMA LBJ Sewersheet\CAD\PlanSheets\C-18 CIVIL DETAILS.dwg
This document, together with the concepts and designs presented herein, as an instrument of service, is intended only for the specific purpose and client for which it was prepared. Reuse of and improper reliance on this document without written authorization and adaptation by Kimley-Horn and Associates, Inc. shall be without liability to Kimley-Horn and Associates, Inc.

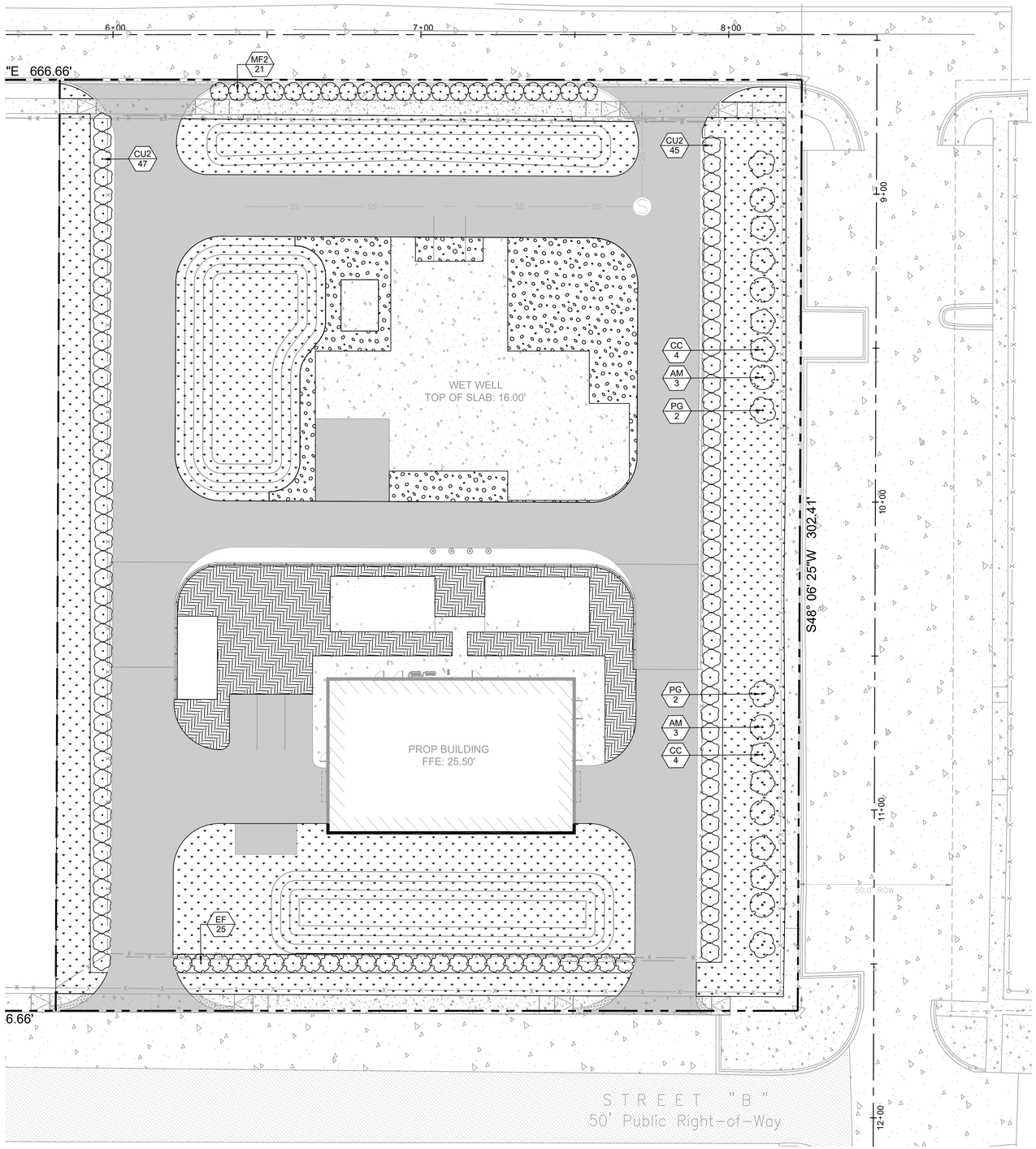

GRAPHIC SCALE IN FEET
0 10 20 40

LEGEND

PROPERTY LINE/RIGHT-OF-WAY

PROP BUILDING

PLANT & MATERIAL SCHEDULE

SYMBOL	CODE	QTY	BOTANICAL / COMMON NAME	CONT.	DBH. SIZE	SIZE	NATIVE
TREES							
	AM	6	ANNONA MURICATA SOURSOP	CONT.	1" CAL MIN	5' HT. MIN.	YES
	CC	8	CITRUS X SINENSIS 'CARA CARA' CARA CARA PINK NAVEL ORANGE	CONT.	1" CAL MIN	5' HT. MIN.	NO
	PG	4	PSIDIUM GUAJAVA GUAVA	CONT.	1" CAL MIN	5' HT. MIN.	NO

SYMBOL	CODE	QTY	BOTANICAL / COMMON NAME	CONT.	SPACING	SIZE	NATIVE
SHRUBS							
	CU2	92	COCCOLOBA UVIFERA SEA GRAPE 6' SPREAD. FULL TO GROUND.	CONT.	AS SHOWN	6' HT. MIN.	YES
	EF	25	EUGENIA FOETIDA SPANISH STOPPER 6' SPREAD. FULL TO GROUND.	CONT.	AS SHOWN	6' HT. MIN.	YES
	MF2	21	MYRCIANTHES FRAGRANS SIMPSON'S STOPPER 6' SPREAD. FULL TO GROUND.	CONT.	AS SHOWN	6' HT. MIN.	YES

SYMBOL	CODE	QTY	BOTANICAL / COMMON NAME	CONT.	SPACING	SIZE	NATIVE
GROUND COVERS							
	PN	22,292 SF	PASPALUM NOTATUM BAHIAGRASS	SEED			NO
	XB	3,246 SF	57 STONE GRAVEL REFER TO CIVIL DRAWINGS.	–			
	XC	3,656 SF	GEOPAVE REFER TO CIVIL DRAWINGS.	–			

LANDSCAPE NOTES:

1. ALL LANDSCAPED AREAS ARE TO RECEIVE A MINIMUM OF 3" OF MULCH. REFER TO LANDSCAPE SPECIFICATIONS.
2. ALL PLANT MATERIAL SHALL BE HEALTHY, VIGOROUS, AND FREE OF PESTS AND DISEASE.
3. ALL PLANT MATERIAL SHALL BE CONTAINER GROWN OR BALLED AND BURLAPPED AS INDICATED IN THE PLANT LIST.
4. ALL TREES SHALL HAVE A STRAIGHT TRUNK, UNLESS OTHERWISE STATED, AND FULL HEAD AND MEET ALL REQUIREMENTS SPECIFIED.
5. ALL MATERIALS ARE SUBJECT TO THE APPROVAL OF THE LANDSCAPE ARCHITECT BEFORE, DURING, AND AFTER INSTALLATION.
6. ALL TREES MUST BE GUYED OR STAKED AS SHOWN IN THE DETAILS.
7. PRIOR TO CONSTRUCTION, THE CONTRACTOR SHALL BE RESPONSIBLE FOR LOCATING ALL UNDERGROUND UTILITIES AND SHALL AVOID DAMAGE TO ALL UTILITIES DURING THE COURSE OF THE WORK. LOCATIONS OF EXISTING BURIED UTILITY LINES SHOWN ON THE PLANS ARE BASED UPON BEST AVAILABLE INFORMATION AND ARE TO BE CONSIDERED APPROXIMATE. IT SHALL BE THE RESPONSIBILITY OF THE CONTRACTOR 1) TO VERIFY THE LOCATIONS OF UTILITY LINES AND ADJACENT TO THE WORK AREA 2) TO PROTECT OF ALL UTILITY LINES DURING THE CONSTRUCTION PERIOD 3) TO REPAIR ANY AND ALL DAMAGE TO UTILITIES, STRUCTURES, SITE APPURTENANCES, ETC. WHICH OCCURS AS A RESULT OF THE CONSTRUCTION.
8. CONTRACTOR SHALL BE RESPONSIBLE FOR DELIVERY SCHEDULE AND PROTECTION BETWEEN DELIVERY AND PLANTING PER SPECIFICATIONS TO MAINTAIN HEALTHY PLANT CONDITIONS.
9. THE CONTRACTOR SHALL BE RESPONSIBLE FOR FULLY MAINTAINING (INCLUDING BUT NOT LIMITED TO: WATERING, SPRAYING, MULCHING, FERTILIZING, ETC.) ALL OF THE PLANT MATERIALS AND LAWN UNTIL ESTABLISHED.
10. ANY PLANT MATERIAL WHICH IS DISEASED, DISTRESSED, DEAD, OR REJECTED (PRIOR TO SUBSTANTIAL COMPLETION) SHALL BE PROMPTLY REMOVED FROM THE SITE AND REPLACED WITH MATERIAL OF THE SAME SPECIES, QUANTITY, AND SIZE AND MEETING ALL PLANT LIST SPECIFICATIONS.
11. ALL PLANT QUANTITIES SHOWN ARE APPROXIMATE AND PROVIDED FOR CONVENIENCE. THE CONTRACTOR IS RESPONSIBLE FOR VERIFYING QUANTITIES BEFORE PRICING AND ENSURING COMPLETE COVERAGE OF PLANTING BEDS AT THE SPECIFIED SPACING. IN CASE OF A DISCREPANCY,CONTRACTOR SHALL NOTIFY THE LANDSCAPE ARCHITECT IN WRITING FOR CLARIFICATION.
12. ALL INVASIVE / EXOTIC SPECIES AND PROHIBITED TREE SPECIES SHALL BE REMOVED FROM SITE, INCLUDING ROOT BALLS TO THE EXTENT POSSIBLE WITH NO DAMAGE TO ADJACENT EXISTING TREES.
13. ALL PROPOSED LANDSCAPE PLANTING AREAS TO BE EXCAVATED TO A MINIMUM DEPTH PER THE LANDSCAPE DETAILS AS NECESSARY TO CONTAIN APPROPRIATE PLANTING MIX AS SPECIFIED. CONTRACTOR SHALL BE RESPONSIBLE FOR PROTECTION OF ALL EXISTING UTILITIES, IRRIGATION LINES, WIRING, STRUCTURES, LANDSCAPE, ETC. WHICH ARE SCHEDULED TO BE RETAINED/REUSED.
14. PLANTS ARE SPECIFIED BY HEIGHT AND SPREAD, NOT CONTAINER SIZE. ALL PLANTINGS ARE EXPECTED TO MEET ALL SPECIFICATIONS PROVIDED.

CONSTRUCTION DOCUMENTS

No.	REVISIONS	DATE	BY

Kimley»Horn

PROFESSIONAL ENGINEER
GEORGE BALABAN, P.E
0-51817-1B
U.S. VIRGIN ISLANDS
2/09/2026

KHA PROJECT 045826000
DATE JUNE 2026
SCALE AS SHOWN
DESIGNED BY KD/GP
DRAWN BY KD
CHECKED BY GP

LANDSCAPE PLAN

LBJ PUMP STATION
PREPARED FOR
VIWMA

SHEET NUMBER
L-01

Plotted By:Davis, Krystof Sheet Set:FEC Layout:L-01 LANDSCAPE PLAN June 24, 2026 01:14:26pm K:\FTL_Civil\045 Jobs\045826000 LBJ Pump Station\Landscape\CADD\PlanSheets\L-01 LANDSCAPE PLAN.dwg
This document, together with the concepts and designs presented herein, as an instrument of service, is intended only for the specific purpose and client for which it was prepared. Reuse of and improper reliance on this document without written authorization and adaptation by Kimley-Horn and Associates, Inc. shall be without liability to Kimley-Horn and Associates, Inc.

Article 15: Landscaping and Screening

Article #	Compliance
15.301.a Ground-mounted Mechanical Equipment	
Ground-mounted mechanical equipment (e.g., air conditioning, heating, cooling, ventilation, exhaust and similar equipment) 30 inches in height or greater must be located at least 15 feet of the property line of a lot used or zoned for residential purposes. Ground-mounted mechanical equipment, including non-exempt utility installations, more than 30 inches in height and located within 25 feet of a street a lot used or zoned for residential purposes must be screened from view by a solid fence, solid wall, dense hedge,	✓
15.302 Standards	
15.302.A	
All plant material used for screening must be at least 3 feet in height at time of planting	✓
Screens may be broken only as necessary to accommodate gates, approved access drives and walkways.	✓
15.404 Plant Selection	
15.404.b	
Invasive species may not be used to meet landscape requirements.	✓
15.404.c	
If more than 30 trees are used, a mixture of 3 or more tree species must be used.	N/A
If more than 50 shrubs are used, a mixture of 3 or more shrub species must be used.	✓
15.405 Plant Types	
15.405.a Evergreen	
Evergreen trees used to satisfy the requirements of this article must have a minimum height of 5 feet at time of planting. There is no minimum caliper size for evergreen trees at time of planting.	✓
15.405.b Deciduous/Broadleaf	
Deciduous/broadleaf shrubs used to satisfy the requirements of this article must have a minimum height of 3 feet or be a minimum 5-gallon size.	✓
15.405.c Evergreen Shrubs	
Evergreen shrubs used to satisfy the requirements of this article must have a minimum width of 2 feet or be a minimum 5-gallon size.	✓
15.405.d Groundcover Plants	
Groundcover plants are deciduous or evergreen plants that grow low and spread horizontally, not including turf. Groundcover plants used to satisfy the requirements of this article must be at least 1-gallon size.	N/A
15.405.e Mulch	
All required trees and shrubs must be located within a mulched area and be separated from turf by a minimum distance of 4 feet.	N/A
15.405.f Native or Naturalized Plants to be Used	
All plant types used must be native of or naturalized to the U.S. Virgin Is-lands. The Planning Office will maintain a list of approved species appropri-ate for use in landscaping.	✓
Landscape islands must be dispersed so that the distance between landscape islands is no greater than 10 parking spaces.	N/A

SYMBOL	CODE	QTY	BOTANICAL / COMMON NAME	CONT.	DBH. SIZE	SIZE	NATIVE
TREES							
	AM	6	ANNONA MURICATA SOURSOP	CONT.	1" CAL MIN	5' HT. MIN.	YES
	CC	8	CITRUS X SINENSIS 'CARA CARA' CARA CARA PINK NAVEL ORANGE	CONT.	1" CAL MIN	5' HT. MIN.	NO
	PG	4	PSIDIUM GUAJAVA GUAVA	CONT.	1" CAL MIN	5' HT. MIN.	NO

SYMBOL	CODE	QTY	BOTANICAL / COMMON NAME	CONT.	SPACING	SIZE	NATIVE
SHRUBS							
	CU2	92	COCCOLOBA UVIFERA SEA GRAPE 6' SPREAD. FULL TO GROUND.	CONT.	AS SHOWN	6' HT. MIN.	YES
	EF	25	EUGENIA FOETIDA SPANISH STOPPER 6' SPREAD. FULL TO GROUND.	CONT.	AS SHOWN	6' HT. MIN.	YES
	MF2	21	MYRCIANTHES FRAGRANS SIMPSON'S STOPPER 6' SPREAD. FULL TO GROUND.	CONT.	AS SHOWN	6' HT. MIN.	YES

SYMBOL	CODE	QTY	BOTANICAL / COMMON NAME	CONT.	SPACING	SIZE	NATIVE
GROUND COVERS							
	PN	22,292 SF	PASPALUM NOTATUM BAHIAGRASS	SEED			NO
	XB	3,246 SF	57 STONE GRAVEL REFER TO CIVIL DRAWINGS.	–			
	XC	3,656 SF	GEOPAVE REFER TO CIVIL DRAWINGS.	–			

CONSTRUCTION DOCUMENTS

No.	REVISIONS	DATE	BY

Kimley»Horn

Sign of Quality

PROFESSIONAL ENGINEER
GEORGE BALABAN, P.E
0-51817-1B
U.S. VIRGIN ISLANDS
06/09/2026

KHA PROJECT 045826000
DATE JUNE 2026
SCALE AS SHOWN
DESIGNED BY KD/GP
DRAWN BY KD
CHECKED BY GP

LANDSCAPE CODE TABLE

LBJ PUMP STATION
PREPARED FOR
VIWMA

SHEET NUMBER
L-02

Plotted By:Davis, Kryztof Sheet Set:FEC Layout:LANDSCAPE CODE TABLE June 24, 2026 01:14:31pm K:\TTL_Civil\045 Jobs\045826000 LBJ Pump Station\Landscape\CADD\PlanSheets\L-01 LANDSCAPE PLAN.dwg
This document, together with the concepts and designs presented herein, as an instrument of service, is intended only for the specific purpose and client for which it was prepared. Reuse of and improper reliance on this document without written authorization and adaptation by Kimley-Horn and Associates, Inc. shall be without liability to Kimley-Horn and Associates, Inc.

NOTES:

A. CONTRACTOR SHALL ASSURE PERCOLATION OF ALL PLANTING PITS PRIOR TO INSTALLATION.

B. FINAL TREE STAKING DETAILS AND PLACEMENT TO BE APPROVED BY OWNER.

C. SEE PRE-APPROVED STAKING METHODS, THIS SHEET

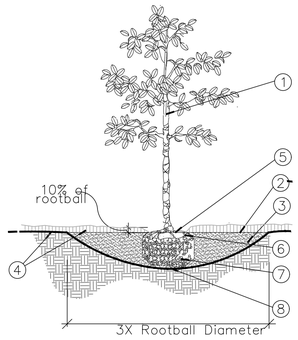

1. TRUNK
2. 3" MINIMUM OF MULCH AS SPECIFIED. WHERE TREES ARE PLACED IN SOD, MULCH RING FOR TREES COVER ROOTBALL SIDES AND EXTEND 18" BEYOND ON ALL SIDES. NO MULCH SHALL BE PLACED OVER TRUNK.
3. SHALLOW/ WIDE PLANT HOLE; TOP SHALL BE 3X THE SIZE OF ROOTBALL.
4. FINISHED GRADE – LANDSCAPE SOIL
5. FIND TOP-MOST ROOT ON ROOTBALL; POSITION ROOTBALL SO THIS TOP ROOT IS 1-2" ABOVE LANDSCAPE SOIL. (APPROX. 10% OF ROOTBALL SHALL BE ABOVE LANDSCAPE SOIL)
6. B & B OR CONTAINER (SEE SPECIFICATIONS FOR ROOT BALL REQUIREMENTS).
7. REMOVE ALL SYNTHETIC MATERIALS FROM ROOTBALL.
8. ROOTBALLS SHALL BE PLACED ON UNDISTURBED SOIL TO PREVENT SETTLING.

A TREE PLANTING
SECTION NTS

* ALL TREES SHALL BE PLUMB VERTICALLY WITHIN A TOLERANCE OF THREE DEGREES, UNLESS OTHERWISE DIRECTED BY OWNER'S REPRESENTATIVE.

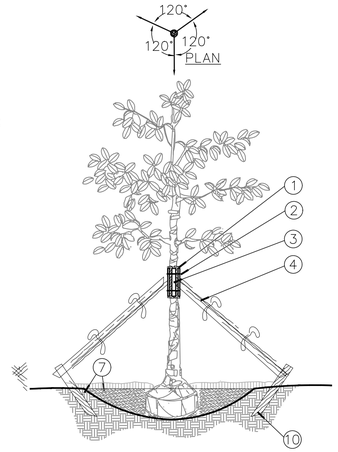

1. FIVE (5) LAYERS OF BURLAP TO PROTECT TRUNK
2. TWO STEEL BANDS TO SECURE BATTENS
3. FIVE 2 X 4 X 18"L WOOD BATTENS
4. THREE (3) 2" X 8' LODGE POLES. DRILL, USING GALVANIZED SCREWS, TO BATTENS AND 2" X 4" STAKES. NO SCREWS SHALL PENETRATE TREE. FLAG AT MIDPOINT AND AT BASE.
5. 2" x 4" x 3' (MIN), P.T. WOOD STAKES BURIED 3" BELOW FINISHED GRADE.
6. CONTRACTOR SHALL PAINT ALL STAKES BENJAMIN MOORE, EXTERIOR GRADE PAINT FLAT MATTE BLACK, 2 COATS.
7. FINISHED GRADE (SEE GRADING PLAN)

NOTES:

A. ALL TREES SHALL BE PLUMB VERTICALLY WITHIN A TOLERANCE OF THREE DEGREES, UNLESS OTHERWISE DIRECTED BY OWNER'S REPRESENTATIVE.

B. FINAL TREE STAKING DETAILS AND PLACEMENT TO BE APPROVED BY OWNER.

C. ALTERNATE TREE ANCHORING SYSTEMS MAY BE SUBSTITUTED FOR WOOD STAKING SYSTEM UPON APPROVAL BY OWNER OR OWNER'S REPRESENTATIVE AFTER REVIEWED BY LANDSCAPE ARCHITECT.

ALTERNATE SYSTEMS:
*BROOKS TREE BRACE SYSTEM
*ARBOR TIE TREE BRACING

D. RUBBER HOSE/WIRE SYSTEMS ARE NOT ALLOWED.

B Large Tree Staking – 100 Gal + or B&B 4" +
SECTION NTS

* REFER TO DETAILS B AND D FOR PLANTING

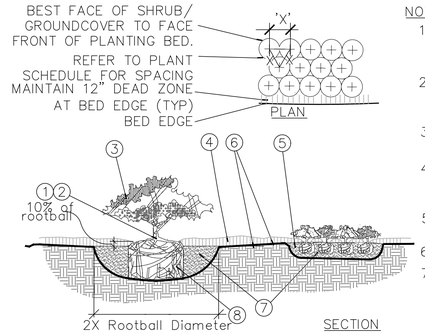

* ALL SHRUBS AND GROUNDCOVERS SHALL BE PLUMB VERTICALLY, UNLESS OTHERWISE DIRECTED BY OWNER'S REPRESENTATIVE.

NOTES:

1. FIND POINT WHERE TOPMOST ROOT EMERGES FROM TRUNK WITHIN 2" OF SURFACE. CLEAR EXCESS SOIL IF NECESSARY.
2. TOP 10% OF SHRUB AND GROUNDCOVER ROOTBALLS TO BE PLANTED ABOVE THE LANDSCAPE GRADE. DO NOT COVER EXPOSED 10% ON SIDES WITH SOIL.
3. PRUNE ALL LIKE SHRUBS WITHIN A PLANTED MASS TO ACHIEVE A UNIFORM MASS/HEIGHT.
4. 3" MINIMUM MULCH AS SPECIFIED – DO NOT COVER ENTIRE SHRUB ROOTBALL OR CREATE 'WATER RINGS' ONLY COVER SIDES OF ROOTBALL WITH MULCH
5. EXCAVATE ENTIRE BED SPECIFIED FOR GROUNDCOVER BED.
6. FINISHED GRADE (SEE GRADING PLAN).
7. PREPARED PLANTING SOIL AS SPECIFIED. NOTE: WHEN GROUND- COVERS AND SHRUBS USED IN MASSES, ENTIRE BED TO BE AMENDED WITH PLANTING SOIL MIX AS SPECIFIED.
8. SCARIFY ROOTBALL SIDES AND BOTTOM.

C SHRUB / GROUNDCOVER PLANTING
PLAN/SECTION NTS

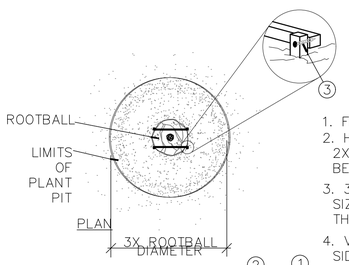

1. FINISH GRADE
2. HORIZONTAL 2X2 SCREWED TO 2X2 STAKE. ALL WOOD SHALL BE #2 UNTREATED.
3. 3-1/2" DRYWALL SCREW, THREAD SIZE 12, SHARP POINT, FULL THREAD, BLACK PHOSPHATE FINISH
4. VERTICAL STAKES SHALL ABUT SIDE OF ROOTBALL
5. STAKES TO EXTEND INTO NATIVE SOIL BY 1-1/2 X THE ROOTBALL DEPTH MIN.

NOTE:

IF SPATIAL REQUIREMENTS PRECLUDE STAKING WITH THIS METHOD, SUBMIT ALTERNATE FOR LANDSCAPE ARCHITECT'S APPROVAL PRIOR TO INSTALLING PLANT.

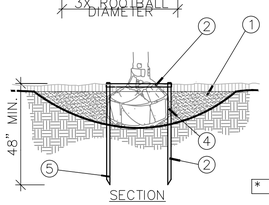

* REFER TO DETAILS B AND D FOR PLANTING

D STAKING – UP TO 65 GAL. OR B&B TO 3-1/2" CAL.
PLAN/SECTION NTS

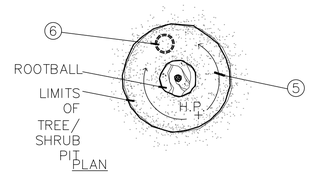

1. FINISH GRADE
2. BACKFILL WITH PREPARED PLANTING SOIL MIX AS SPECIFIED.
3. FILTER CLOTH, MIRAFI 500X OR BETTER
4. 12" CLEAN SAND, COMPACTED. ADJUST LAYER THICKNESS SO TOP OF ROOTBALL IS AT LEAST 1" ABOVE FINISHED GRADE.
5. SLOPE BOTTOM TO DRAIN
6. ±18"ϕ AUGURED HOLE PENETRATE THROUGH OCCLUDING LAYER TO WATER TABLE OR TO A DEPTH OF 7' TO ASSURE PROPER PERCOLATION.
7. BACKFILL WITH 1/2" – 3/4" GRAVEL.
8. WATER TABLE. (DEPTH VARIES)

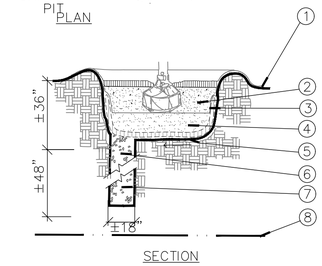

NOTE:

FOR A PARKING ISLAND PLANTING SITUATION, CONTRACTOR TO BACKFILL ENTIRE LENGTH OF PLANTING AREA TO WITHIN 6" OF BACK OF CURB OR EDGE OF PAVEMENT. REFER TO NOTE 0.3 OF WRITTEN SPECIFICATIONS FOR ADDITIONAL INFORMATION.

E POOR DRAINAGE CONDITION
PLAN/SECTION NTS

CONSTRUCTION DOCUMENTS

No.	REVISIONS	DATE	BY

Kimley»Horn

PROFESSIONAL ENGINEER
GEORGE BALABAN, P.E
0-51817-1B
U.S. VIRGIN ISLANDS
06/09/2026

KHA PROJECT 045826000
DATE JUNE 2026
SCALE AS SHOWN
DESIGNED BY KD/GP
DRAWN BY KD
CHECKED BY GP

LANDSCAPE NOTES AND DETAILS

LBJ PUMP STATION
PREPARED FOR VIWMA

SHEET NUMBER
L-03

Plotted By:Davis, Krystof Sheet Set:FEC Layout:L-03 LANDSCAPE NOTES AND DETAILS June 24, 2026 01:14:41pm K:\FTL_Civil\045 Jobs\045826000 LBJ Pump Station\Landscape\CADD\PlanSheets\LANDSCAPE AND IRRIGATION NOTES AND DETAILS.dwg
This document, together with the concepts and designs presented herein, as an instrument of service, is intended only for the specific purpose and client for which it was prepared. Reuse of and improper reliance on this document without written authorization and adaptation by Kimley-Horn and Associates, Inc. shall be without liability to Kimley-Horn and Associates, Inc.

GENERAL LANDSCAPE SPECIFICATIONS AND NOTES

A. SCOPE OF WORK

1. THE WORK CONSISTS OF: FURNISHING ALL LABOR, MATERIALS, EQUIPMENT, TOOLS, TRANSPORTATION, AND ANY OTHER APPURTENANCES NECESSARY FOR THE COMPLETION OF THIS PROJECT AS SHOWN ON THE DRAWINGS, AS INCLUDED IN THE PLANT LIST, AND AS HEREIN SPECIFIED.
2. WORK SHALL INCLUDE MAINTENANCE AND WATERING OF ALL CONTRACT PLANTING AREAS UNTIL CERTIFICATION OF ACCEPTABILITY BY THE OWNER.

B. PROTECTION OF EXISTING STRUCTURES

1. ALL EXISTING BUILDINGS, WALKS, WALLS, PAVING, PIPING, OTHER SITE CONSTRUCTION ITEMS, AND PLANTING ALREADY COMPLETED OR ESTABLISHED SHALL BE PROTECTED FROM DAMAGE BY THE CONTRACTOR UNLESS OTHERWISE SPECIFIED. ALL DAMAGE RESULTING FROM NEGLIGENCE SHALL BE REPAIRED OR REPLACED TO THE SATISFACTION OF THE OWNER, AT NO COST TO THE OWNER.

C. PROTECTION OF EXISTING PLANT MATERIALS OUTSIDE LIMIT OF WORK

1. THE CONTRACTOR SHALL BE RESPONSIBLE FOR ALL UNAUTHORIZED CUTTING OR DAMAGE TO TREES AND SHRUBS EXISTING OR OTHERWISE, CAUSED BY CARELESS EQUIPMENT OPERATION, MATERIAL STOCKPILING, ETC. THIS SHALL INCLUDE COMPACTION BY DRIVING OR PARKING INSIDE THE DRIP–LINE AND SPILLING OIL, GASOLINE, OR OTHER DELETERIOUS MATERIALS WITHIN THE DRIP–LINE. NO MATERIALS SHALL BE BURNED WHERE HEAT WILL DAMAGE ANY PLANT. EXISTING TREES KILLED OR DAMAGED SO THAT THEY ARE MISSHAPEN AND/ OR UNSIGHTLY SHALL BE REPLACED AT THE COST TO THE CONTRACTOR OF ONE HUNDRED DOLLARS ($100) PER CALIPER INCH ON AN ESCALATING SCALE WHICH ADDS AN ADDITIONAL TWENTY (20) PERCENT PER INCH OVER FOUR (4) INCHES CALIPER AS FIXED AND AGREED LIQUIDATED DAMAGES. CALIPER SHALL BE MEASURED SIX (6) INCHES ABOVE GROUND LEVEL FOR TREES UP TO AND INCLUDING FOUR (4) INCH CALIPER AND TWELVE (12) INCHES ABOVE GROUND LEVEL FOR TREES OVER FOUR (4) INCH CALIPER.

D. MATERIALS

1. GENERAL
   a. MATERIALS LISTED BELOW SHALL BE SUBMITTED FOR APPROVAL. UPON SUBMITTALS' APPROVAL, DELIVERY OF MATERIALS MAY COMMENCE.

MATERIAL	SUBMITTAL
MULCH	PRODUCT DATA
TOPSOIL MIX TEST RESULTS	AMENDMENT MIX/ PRODUCT DATA/
PLANTS SPECIES NURSERY) INDICATE SIZES (HEIGHT/WIDTH) AND QUALITY PER SPEC. PHOTOS.	PHOTOGRAPHS OF ONE (1) OF EACH (OR TAGGED IN CLIENT REQUESTED TAGGING MAY SUBSTITUTE
FERTILIZER	PRODUCT DATA
INNOCULANT	PRODUCT DATA
HERBICIDE	PRODUCT DATA

2. PLANT MATERIALS
   a. PLANT SPECIES AND SIZE SHALL CONFORM TO THOSE INDICATED ON THE DRAWINGS. NOMENCLATURE SHALL CONFORM TO STANDARDIZED PLANT NAMES, 1942 EDITION. ALL NURSERY STOCK SHALL BE IN ACCORDANCE WITH GRADES AND STANDARDS FOR NURSERY PLANTS, LATEST EDITION, PUBLISHED BY THE FLORIDA DEPARTMENT OF AGRICULTURE AND CONSUMER SERVICES. ALL PLANTS SHALL BE FLORIDA GRADE NO. 1 OR BETTER AS DETERMINED BY THE FLORIDA DIVISION OF PLANT INDUSTRY. ALL PLANTS SHALL BE HEALTHY, VIGOROUS, SOUND, WELL–BRANCHED, AND FREE OF DISEASE AND INSECTS, INSECT EGGS AND LARVAE AND SHALL HAVE ADEQUATE ROOT SYSTEMS. TREES FOR PLANTING IN ROWS SHALL BE UNIFORM IN SIZE AND SHAPE. ALL MATERIALS SHALL BE SUBJECT TO APPROVAL BY THE OWNER. WHERE ANY REQUIREMENTS ARE OMITTED FROM THE PLANT LIST, THE PLANTS FURNISHED SHALL BE NORMAL FOR THE VARIETY. PLANTS SHALL BE PRUNED PRIOR TO DELIVERY ONLY WITH APPROVAL FROM OWNER OR OWNER'S REPRESENTATIVE. NO SUBSTITUTIONS SHALL BE MADE WITHOUT WRITTEN PERMISSION FROM THE OWNER'S REPRESENTATIVE.
   b. MEASUREMENTS: THE HEIGHT AND/OR WIDTH OF TREES SHALL BE MEASURED FROM THE GROUND OR ACROSS THE NORMAL SPREAD OF BRANCHES WITH THE PLANTS IN THEIR NORMAL POSITION. THIS MEASUREMENT SHALL NOT INCLUDE THE IMMEDIATE TERMINAL GROWTH. PLANTS LARGER IN SIZE THAN THOSE SPECIFIED IN THE PLANT LIST MAY BE USED IF APPROVED BY THE OWNER. IF THE USE OF LARGER PLANTS IS APPROVED, THE BALL OF EARTH OR SPREAD OF ROOTS SHALL BE INCREASED IN PROPORTION TO THE SIZE OF THE PLANT.
   c. INSPECTION: PLANTS SHALL BE SUBJECT TO INSPECTION AND APPROVAL AT THE PLACE OF GROWTH, OR UPON DELIVERY TO THE SITE, AS DETERMINED BY THE OWNER, FOR QUALITY, SIZE, AND VARIETY; SUCH APPROVAL SHALL NOT IMPAIR THE RIGHT OF INSPECTION AND REJECTION AT THE SITE DURING PROGRESS OF THE WORK OR AFTER COMPLETION FOR SIZE AND CONDITION OF ROOT BALLS OR ROOTS, LATENT DEFECTS OR INJURIES. REJECTED PLANTS SHALL BE REMOVED IMMEDIATELY FROM THE SITE. NOTICE REQUESTING INSPECTION SHALL BE SUBMITTED IN WRITING BY THE CONTRACTOR AT LEAST ONE (1) WEEK PRIOR TO ANTICIPATED DATE.

E. SOIL MIXTURE

1. SOIL MIXTURE (PLANTING MEDIUM FOR PLANT PITS) SHALL CONSIST OF 70% COARSE SAND AND 30% FLORIDA PEAT, AS DESCRIBED BELOW.
2. SOIL FOR USE IN PREPARING SOIL MIXTURE FOR BACKFILLING PLANT PITS SHALL BE FERTILE, FRIABLE, AND OF A LOAMY CHARACTER; REASONABLY FREE OF SUBSOIL, CLAY LUMPS, BRUSH WEEDS AND OTHER LITTER; FREE OF ROOTS, STUMPS, STONES LARGER THAN 2" IN ANY DIRECTION, AND OTHER EXTRANEOUS OR TOXIC MATTER HARMFUL TO PLANT GROWTH. IT SHALL HAVE A PH BETWEEN 5.5 AND 7.0 – SUBMIT SAMPLE AND PH TESTING RESULTS FOR APPROVAL.
3. SAND SHALL BE COARSE, CLEAN, WELL–DRAINING, NATIVE SAND. CONTRACTOR SHALL SUBMIT RESULTS OF SOIL TEST FOR THE SOIL AND SAND PROPOSED FOR USE UNDER THIS CONTRACT FOR APPROVAL BY THE OWNER.
4. CONTRACTOR TO SUBMIT SAMPLES OF SOIL MIXTURE FOR OWNER'S REPRESENTATIVE APPROVAL PRIOR TO PLANT INSTALLATION OPERATIONS COMMENCE.
5. CONTRACTOR SHALL PROVIDE PH TEST RESULT FOR ALL MIX COMPONENTS.
6. CONTRACTOR SHALL PROVIDE PENETROMETER ON–SITE AT ALL TIMES FOR COMPACTION INSPECTION AT THE DISCRETION OF THE LANDSCAPE ARCHITECT.
7. PENETROMETER CRITERIA / SPECIFICATION SHALL RANGE FROM APPROX. 75 PSI TO LESS THAN 300 PSI OR AS DETERMINE BY LANDSCAPE ARCHITECT.
8. SOIL SHALL BE SUPPLIED BY ATLAS PEAT & SOIL INC. 9621 STATE RD, BOYNTON BEACH, FLORIDA 33472. PHONE: 561–734–7300 OR APPROVED EQUAL.
9. FINAL MIX SHALL BE TESTED TO HAVE A SATURATED WEIGHT OF NO MORE THAN 110 POUNDS PER CUBIC FOOT WHEN FULLY COMPACTED TO 85% STANDARDS PROCTOR.

F. WATER

1. WATER NECESSARY FOR PLANTING AND MAINTENANCE SHALL BE OF SATISFACTORY QUALITY TO SUSTAIN AN ADEQUATE PLANT GROWTH AND SHALL NOT CONTAIN HARMFUL, NATURAL OR MAN–MADE ELEMENTS DETRIMENTAL TO PLANTS. WATER MEETING THE ABOVE STANDARD SHALL BE OBTAINED ON THE SITE FROM THE OWNER, IF AVAILABLE, AND THE CONTRACTOR SHALL BE RESPONSIBLE TO MAKE ARRANGEMENTS FOR ITS USE BY HIS TANKS, HOSES, SPRINKLERS, ETC.. IF SUCH WATER IS NOT AVAILABLE AT THE SITE, THE CONTRACTOR SHALL PROVIDE SATISFACTORY WATER FROM SOURCES OFF THE SITE AT NO ADDITIONAL COST TO THE OWNER.
2. CONTRACTOR SHALL INSURE ALL PLANT MATERIAL RECEIVES APPROPRIATE WATER THROUGHOUT THE GUARANTEE PERIOD SO PLANT MATERIAL THRIVES AND ESTABLISHES READILY.
3. CONTRACTOR SHALL SUBMIT A WATERING SCHEDULE FOR WRITTEN APPROVAL BY THE CLIENT.

*WATERING/IRRIGATION RESTRICTIONS MAY APPLY – REFER TO PROPERTY'S JURISDICTIONAL AUTHORITY.

G. FERTILIZER

1. CONTRACTOR SHALL PROVIDE FERTILIZER APPLICATION SCHEDULE TO OWNER, AS APPLICABLE TO SOIL TYPE, PLANT INSTALLATION TYPE, AND SITE'S PROPOSED USE. SUGGESTED FERTILIZER TYPES SHALL BE ORGANIC OR OTHERWISE NATURALLY–DERIVED.

*FERTILIZER RESTRICTIONS MAY APPLY – REFER TO PROPERTY'S JURISDICTIONAL AUTHORITY.

H. MULCH

1. MULCH MATERIAL SHALL BE MOISTENED AT THE TIME OF APPLICATION TO PREVENT WIND DISPLACEMENT, AND APPLIED AT A MINIMUM DEPTH OF 3 INCHES. CLEAR MULCH FROM EACH PLANT'S CROWN (BASE). TYPE OF MATERIAL: "FLORIMULCH" OR SHREDDED, STERILE EUCALYPTUS MULCH.

I. DIGGING AND HANDLING

1. PROTECT ROOTS OR ROOT BALLS OF PLANTS AT ALL TIMES FROM SUN, DRYING WINDS, WATER AND FREEZING, AS NECESSARY UNTIL PLANTING. PLANT MATERIALS SHALL BE ADEQUATELY PACKED TO PREVENT DAMAGE DURING TRANSIT. TREES TRANSPORTED MORE THAN TEN (10) MILES OR WHICH ARE NOT PLANTED WITHIN THREE (3) DAYS OF DELIVERY TO SITE SHALL BE SPRAYED WITH AN ANTITRANSPIRANT PRODUCT ("WILTPRUF" OR EQUAL) TO MINIMIZE TRANSPIRATIONAL WATER LOSS.
2. BALLED AND BURLAPPED PLANTS (B&B) SHALL BE DUG WITH FIRM, NATURAL BALLS OF SOIL OF SUFFICIENT SIZE TO ENCOMPASS THE FIBROUS AND FEEDING ROOTS OF THE PLANTS. NO PLANTS MOVED WITH A ROOT BALL SHALL BE PLANTED IF THE BALL IS CRACKED OR BROKEN. PLANTS BALLED AND BURLAPPED OR CONTAINER GROWN SHALL NOT BE HANDLED BY STEMS.
3. PLANTS MARKED "BR" IN THE PLANT LIST SHALL BE DUG WITH BARE ROOTS, COMPLYING WITH FLORIDA GRADES AND STANDARDS FOR NURSERY PLANTS, CURRENT EDITION. CARE SHALL BE EXERCISED THAT THE ROOTS DO NOT DRY OUT DURING TRANSPORTATION AND PRIOR TO PLANTING.
4. PROTECTION OF PALMS (IF APPLICABLE): ONLY A MINIMUM OF FRONDS SHALL BE REMOVED FROM THE CROWN OF THE PALM TREES TO FACILITATE MOVING AND HANDLING. CLEAR TRUNK (CT) SHALL BE AS SPECIFIED AFTER THE MINIMUM OF FRONDS HAVE BEEN REMOVED. ALL PALMS SHALL BE BRACED PER PALM PLANTING DETAIL.
5. EXCAVATION OF TREE PITS SHALL BE PERFORMED USING EXTREME CARE TO AVOID DAMAGE TO SURFACE AND SUBSURFACE ELEMENTS SUCH AS UTILITIES OR HARDSCAPE ELEMENTS, FOOTERS AND PREPARED SUB–BASES.

J. CONTAINER GROWN STOCK

1. ALL CONTAINER GROWN MATERIAL SHALL BE HEALTHY, VIGOROUS, WELL–ROOTED PLANTS ESTABLISHED IN THE CONTAINER IN WHICH THEY ARE SOLD. THE PLANTS SHALL HAVE TOPS WHICH ARE OF GOOD QUALITY AND ARE IN A HEALTHY GROWING CONDITION, FLORIDA #1 OR BETTER.
2. AN ESTABLISHED CONTAINER GROWN PLANT SHALL BE TRANSPLANTED INTO A CONTAINER AND GROWN IN THAT CONTAINER SUFFICIENTLY LONG FOR THE NEW FIBROUS ROOTS TO HAVE DEVELOPED SO THAT THE ROOT MASS WILL RETAIN ITS SHAPE AND HOLD TOGETHER WHEN REMOVED FROM THE CONTAINER. CONTAINER GROWN STOCK SHALL NOT BE HANDLED BY THEIR STEMS.
3. PLANT ROOTS BOUND IN CONTAINERS ARE NOT ACCEPTABLE.
4. SUBSTITUTION OF NON–CONTAINER GROWN MATERIAL FOR MATERIAL EXPLICITLY SPECIFIED TO BE CONTAINER GROWN WILL NOT BE PERMITTED WITHOUT WRITTEN APPROVAL IS OBTAINED FROM THE OWNER OR OWNER'S REPRESENTATIVE.

K. COLLECTED STOCK

1. WHEN THE USE OF COLLECTED STOCK IS PERMITTED AS INDICATED BY THE OWNER OR OWNER'S REPRESENTATIVE, THE MINIMUM SIZES OF ROOTBALLS SHALL BE EQUAL TO THAT SPECIFIED FOR THE NEXT LARGER SIZE OF NURSERY GROWN STOCK OF THE SAME VARIETY.

L. NATIVE STOCK

1. PLANTS COLLECTED FROM WILD OR NATIVE STANDS SHALL BE CONSIDERED NURSERY GROWN WHEN THEY HAVE BEEN SUCCESSFULLY RE–ESTABLISHED IN A NURSERY ROW AND GROWN UNDER REGULAR NURSERY CULTURAL PRACTICES FOR A MINIMUM OF TWO (2) GROWING SEASONS AND HAVE ATTAINED ADEQUATE ROOT AND TOP GROWTH TO INDICATE FULL RECOVERY FROM TRANSPLANTING INTO THE NURSERY ROW.

M. MATERIALS LIST

1. QUANTITIES NECESSARY TO COMPLETE THE WORK ON THE DRAWINGS SHALL BE FURNISHED BY THE CONTRACTOR. QUANTITY ESTIMATES HAVE BEEN MADE CAREFULLY, BUT THE LANDSCAPE ARCHITECT OR OWNER ASSUMES NO LIABILITY FOR OMISSIONS OR ERRORS. SHOULD A DISCREPANCY OCCUR BETWEEN THE PLANS AND THE PLANT LIST QUANTITY, THE LANDSCAPE ARCHITECT SHALL BE NOTIFIED FOR CLARIFICATION PRIOR TO BIDDING OR INSTALLATION. ALL DIMENSIONS AND/OR SIZES SPECIFIED SHALL BE THE MINIMUM ACCEPTABLE SIZE.

N. FINE GRADING

1. FINE GRADING UNDER THIS CONTRACT SHALL CONSIST OF FINAL FINISHED GRADING OF LAWN AND PLANTING AREAS THAT HAVE BEEN ROUGH GRADED BY OTHERS. BERMING AS SHOWN ON THE DRAWINGS SHALL BE THE RESPONSIBILITY OF THE CONTRACTOR, UNLESS OTHERWISE NOTED.
2. THE CONTRACTOR SHALL FINE GRADE THE LAWN AND PLANTING AREAS TO BRING THE ROUGH GRADE UP TO FINAL FINISHED GRADE ALLOWING FOR THICKNESS OF SOD AND/OR MULCH DEPTH. THIS CONTRACTOR SHALL FINE GRADE BY HAND AND/OR WITH ALL EQUIPMENT NECESSARY INCLUDING A GRADING TRACTOR WITH FRONT–END LOADER FOR TRANSPORTING SOIL WITHIN THE SITE.
3. ALL PLANTING AREAS SHALL BE GRADED AND MAINTAINED FOR POSITIVE DRAINAGE TO SURFACE/SUBSURFACE STORM DRAIN SYSTEMS. AREAS ADJACENT TO BUILDINGS SHALL SLOPE AWAY FROM THE BUILDINGS. REFER TO CIVIL ENGINEER'S PLANS FOR FINAL GRADES.

CONSTRUCTION DOCUMENTS

No.	REVISIONS	DATE	BY

Kimley»Horn

PROFESSIONAL ENGINEER
GEORGE BALABAN, P.E
0–51817–1B
U.S. VIRGIN ISLANDS
07/09/2026

KHA PROJECT	045826000
DATE	JUNE 2026
SCALE	AS SHOWN
DESIGNED BY	KD/GP
DRAWN BY	KD
CHECKED BY	GP

LANDSCAPE NOTES AND DETAILS

LBJ PUMP STATION
PREPARED FOR
VIWMA

SHEET NUMBER
L-04

Plotted By:Davis, Kryztof Sheet Set:FEC Layout:Landscape Notes June 24, 2026 01:14:44pm K:\FTL_Civil\045_Jobs\045826000 LBJ Pump Station\Landscape\CADD\PlanSheets\LANDSCAPE AND IRRIGATION NOTES AND DETAILS.dwg
This document, together with the concepts and designs presented herein, as an instrument of service, is intended only for the specific purpose and client for which it was prepared. Reuse of and improper reliance on this document without written authorization and adaptation by Kimley-Horn and Associates, Inc. shall be without liability to Kimley-Horn and Associates, Inc.

GENERAL LANDSCAPE SPECIFICATIONS AND NOTES

A. PLANTING PROCEDURES

1. 1. CLEANING UP BEFORE COMMENCING WORK: THE CONTRACTOR SHALL CLEAN WORK AND SURROUNDING AREAS OF ALL RUBBISH OR OBJECTIONABLE MATTER. ALL MORTAR, CEMENT, AND TOXIC MATERIAL SHALL BE REMOVED FROM THE SURFACE OF ALL PLANT BEDS. THESE MATERIALS SHALL NOT BE MIXED WITH THE SOIL. SHOULD THE CONTRACTOR FIND SUCH SOIL CONDITIONS BENEATH THE SOIL WHICH WILL IN ANY WAY ADVERSELY AFFECT THE PLANT GROWTH, HE SHALL IMMEDIATELY CALL IT TO THE ATTENTION OF THE OWNER'S REPRESENTATIVE. FAILURE TO DO SO BEFORE PLANTING SHALL MAKE THE CORRECTIVE MEASURES THE RESPONSIBILITY OF THE CONTRACTOR.
2. VERIFY LOCATIONS OF ALL UTILITIES, CONDUITS, SUPPLY LINES AND CABLES, INCLUDING BUT NOT LIMITED TO: ELECTRIC, GAS (LINES AND TANKS), WATER, SANITARY SEWER, STORMWATER SYSTEMS, CABLE, AND TELEPHONE. PROPERLY MAINTAIN AND PROTECT EXISTING UTILITIES. CALL NATIONAL ONE CALL – 811 – TO LOCATE UTILITIES.
3. SUBGRADE EXCAVATION: CONTRACTOR IS RESPONSIBLE TO REMOVE ALL EXISTING AND IMPORTED LIMEROCK AND LIMEROCK SUB–BASE FROM ALL LANDSCAPE PLANTING AREAS TO A MINIMUM DEPTH OF 36". CONTRACTOR IS RESPONSIBLE TO BACKFILL THESE PLANTING AREAS TO ROUGH FINISHED GRADE WITH CLEAN TOPSOIL FROM AN ON–SITE SOURCE OR AN IMPORTED SOURCE. IF LIMEROCK OR OTHER ADVERSE CONDITIONS OCCUR IN PLANTED AREAS AFTER 36" DEEP EXCAVATION BY THE CONTRACTOR, AND ADEQUATE PERCOLATION CAN NOT BE ACHIEVED, CONTRACTOR SHALL UTILIZE PLANTING DETAIL THAT ADDRESSES POOR DRAINAGE.
4. FURNISH NURSERY'S CERTIFICATE OF COMPLIANCE WITH ALL REQUIREMENTS AS HEREIN SPECIFIED AND REQUIRED. INSPECT AND SELECT PLANT MATERIALS BEFORE PLANTS ARE DUG AT NURSERY OR GROWING SITE.
5. GENERAL COMPLY WITH APPLICABLE FEDERAL, TERRITORY, AND LOCAL REGULATIONS GOVERNING LANDSCAPE MATERIALS AND WORK. CONFORM TO ACCEPTED HORTICULTURAL PRACTICES AS USED IN THE TRADE. UPON ARRIVAL AT THE SITE, PLANTS SHALL BE THOROUGHLY WATERED AND PROPERLY MAINTAINED UNTIL PLANTED. PLANTS STORED ON–SITE SHALL NOT REMAIN UNPLANTED FOR A PERIOD EXCEEDING TWENTY–FOUR (24) HOURS. AT ALL TIMES, METHODS CUSTOMARY IN GOOD HORTICULTURAL PRACTICES SHALL BE EXERCISED.
6. THE WORK SHALL BE COORDINATED WITH OTHER TRADES TO PREVENT CONFLICTS. COORDINATE PLANTING WITH IRRIGATION WORK TO ASSURE AVAILABILITY OF WATER AND PROPER LOCATION OF IRRIGATION APPURTENANCES AND PLANTS.
7. ALL PLANTING PITS SHALL BE EXCAVATED TO SIZE AND DEPTH IN ACCORDANCE WITH THE USA STANDARD FOR NURSERY STOCK 260.1, UNLESS SHOWN OTHERWISE ON THE DRAWINGS, AND BACKFILLED WITH THE PREPARED PLANTING SOIL MIXTURE AS SPECIFIED IN SECTION E. TEST ALL TREE PITS WITH WATER BEFORE PLANTING TO ASSURE PROPER DRAINAGE PERCOLATION IS AVAILABLE. NO ALLOWANCE WILL BE MADE FOR LOST PLANTS DUE TO IMPROPER PERCOLATION. IF POOR PERCOLATION EXISTS, UTILIZE "POOR DRAINAGE CONDITION" PLANTING DETAIL. TREES SHALL BE SET PLUMB AND HELD IN POSITION UNTIL THE PLANTING MIXTURE HAS BEEN FLUSHED INTO PLACE WITH A SLOW, FULL HOSE STREAM. ALL PLANTING SHALL BE PERFORMED BY PERSONNEL FAMILIAR WITH PLANTING PROCEDURES AND UNDER THE SUPERVISION OF A QUALIFIED LANDSCAPE FOREMAN. PROPER "JETTING IN" SHALL BE ASSURED TO ELIMINATE AIR POCKETS AROUND THE ROOTS. "JET STICK" OR EQUAL IS RECOMMENDED.
8. TAKE ALL NECESSARY PRECAUTIONS TO AVOID DAMAGE TO BUILDINGS AND BUILDING STRUCTURES WHILE INSTALLING TREES.
9. SOIL MIXTURE SHALL BE AS SPECIFIED IN SECTION E OF THESE SPECIFICATIONS.
10. TREES AND SHRUBS SHALL BE SET STRAIGHT AT AN ELEVATION THAT, AFTER SETTLEMENT, THE PLANT CROWN WILL STAND ONE (1) TO TWO (2) INCHES ABOVE GRADE. EACH PLANT SHALL BE SET IN THE CENTER OF THE PIT. PLANTING SOIL MIXTURE SHALL BE BACKFILLED, THOROUGHLY TAMPED AROUND THE BALL, AND SETTLED BY WATER (AFTER TAMPING).
11. AMEND PINE AND OAK PLANT PITS WITH ECTOMYCORRHIZAL SOIL APPLICATION PER MANUFACTURER'S RECOMMENDATION. ALL OTHER PLANT PITS SHALL BE AMENDED WITH ENDOMYCORRHIZAL SOIL APPLICATION PER MANUFACTURER'S RECOMMENDATION. PROVIDE PRODUCT INFORMATION SUBMITTAL PRIOR TO INOCULATION.
12. FILL HOLE WITH SOIL MIXTURE, MAKING CERTAIN ALL SOIL IS SATURATED. TO DO THIS, FILL HOLE WITH WATER AND ALLOW TO SOAK MINIMUM TWENTY (20) MINUTES, STIRRING IF NECESSARY TO GET SOIL THOROUGHLY WET. PACK LIGHTLY WITH FEET. ADD MORE WET SOIL MIXTURE. DO NOT COVER TOP OF BALL WITH SOIL MIXTURE, ONLY WITH MULCH. ALL BURLAP, ROPE, WIRES, BASKETS, ETC.., SHALL BE REMOVED FROM THE SIDES AND TOPS OF BALLS, BUT NO BURLAP SHALL BE PULLED FROM UNDERNEATH.
13. PRUNING: TREES SHALL BE PRUNED, AT THE DIRECTION OF THE OWNER OR OWNER'S REPRESENTATIVE, TO PRESERVE THE NATURAL CHARACTER OF THE PLANT. ALL SOFT WOOD OR SUCKER GROWTH AND ALL BROKEN OR BADLY DAMAGED BRANCHES SHALL BE REMOVED WITH A CLEAN CUT. ALL PRUNING TO BE PERFORMED BY LICENSED ARBORIST, IN ACCORDANCE WITH ANSI A–300.
14. SHRUBS AND GROUND COVER PLANTS SHALL BE EVENLY SPACED IN ACCORDANCE WITH THE DRAWINGS AND AS INDICATED ON THE PLANT LIST. CULTIVATE ALL PLANTING AREAS TO A MINIMUM DEPTH OF 6", REMOVE AND DISPOSE ALL DEBRIS. MIX TOP 4" TO ACHEIVE SOIL MIXTURE AS SPECIFIED IN SECTION E. THOROUGHLY WATER ALL PLANTS AFTER INSTALLATION.
15. TREE GUYING AND BRACING SHALL BE INSTALLED BY THE CONTRACTOR IN ACCORDANCE WITH THE PLANS TO INSURE STABILITY AND MAINTAIN TREES IN AN UPRIGHT POSITION. IF THE CONTRACTOR AND OWNER DECIDE TO WAIVE THE TREE GUYING AND BRACING, THE OWNER SHALL NOTIFY THE LANDSCAPE ARCHITECT IN WRITING AND AGREE TO INDEMNIFY AND HOLD HARMLESS THE LANDSCAPE ARCHITECT IN THE EVENT UNSUPPORTED TREES PLANTED UNDER THIS CONTRACT FALL AND DAMAGE PERSON OR PROPERTY.
16. MULCHING: PROVIDE A THREE INCH (MINIMUM) LAYER OF SPECIFIED MULCH OVER THE ENTIRE AREA OF EACH SHRUB BED, GROUND COVER, VINE BED, AND TREE PIT PLANTED UNDER THIS CONTRACT.
17. HERBICIDE WEED CONTROL: ALL PLANT BEDS SHALL BE KEPT FREE OF NOXIOUS WEEDS UNTIL FINAL ACCEPTANCE OF WORK. IF DIRECTED BY THE OWNER, "ROUND–UP" SHALL BE APPLIED FOR WEED CONTROL BY QUALIFIED PERSONNEL TO ALL PLANTING AREAS IN SPOT APPLICATIONS PER MANUFACTURER'S PRECAUTIONS AND SPECIFICATIONS. PRIOR TO FINAL INSPECTION, TREAT ALL PLANTING BEDS WITH AN APPROVED PRE–EMERGENT HERBICIDE AT AN APPLICATION RATE RECOMMENDED BY THE MANUFACTURER. (AS ALLOWED BY JURISDICTIONAL AUTHORITY)

P. LAWN SODDING

1. THE WORK CONSISTS OF LAWN BED PREPARATION, SOIL PREPARATION, AND SODDING COMPLETE, IN STRICT ACCORDANCE WITH THE SPECIFICATIONS AND THE APPLICABLE DRAWINGS TO PRODUCE A TURF GRASS LAWN ACCEPTABLE TO THE OWNER.
2. LAWN BED PREPARATION: ALL AREAS THAT ARE TO BE SODDED SHALL BE CLEARED OF ANY ROUGH GRASS, WEEDS, AND DEBRIS, AND THE GROUND BROUGHT TO AN EVEN GRADE. THE ENTIRE SURFACE SHALL BE ROLLED WITH A ROLLER WEIGHING NOT MORE THAN ONE–HUNDRED (100) POUNDS PER FOOT OF WIDTH. DURING THE ROLLING, ALL DEPRESSIONS CAUSED BY SETTLEMENT SHALL BE FILLED WITH ADDITIONAL SOIL, AND THE SURFACE SHALL BE REGRADED AND ROLLED UNTIL PRESENTING A SMOOTH AND EVEN FINISH TO THE REQUIRED GRADE.
3. SOIL PREPARATION: PREPARE LOOSE BED FOUR (4) INCHES DEEP. HAND RAKE UNTIL ALL BUMPS AND DEPRESSIONS ARE REMOVED. WET PREPARED AREA THOROUGHLY.

Q. CLEANUP

5. UPON COMPLETION OF ALL PLANTING WORK AND BEFORE FINAL ACCEPTANCE, THE CONTRACTOR SHALL REMOVE ALL MATERIAL, EQUIPMENT, AND DEBRIS RESULTING FROM HIS WORK. ALL PAVED AREAS SHALL BE BROOM–CLEANED AND THE SITE LEFT IN A NEAT AND ACCEPTABLE CONDITION AS APPROVED BY THE OWNER'S AUTHORIZED REPRESENTATIVE.

R. PLANT MATERIAL MAINTENANCE

1. ALL PLANTS AND PLANTING INCLUDED UNDER THIS CONTRACT SHALL BE MAINTAINED BY WATERING, CULTIVATING, SPRAYING, AND ALL OTHER OPERATIONS (SUCH AS RE–STAKING OR REPAIRING GUY SUPPORTS) NECESSARY TO INSURE A HEALTHY PLANT CONDITION BY THE CONTRACTOR UNTIL CERTIFICATION OF ACCEPTABILITY BY THE OWNER'S REPRESENTATIVE. MAINTENANCE AFTER THE CERTIFICATION OF ACCEPTABILITY SHALL BE IN ACCORDANCE WITH THE SPECIFICATIONS IN THIS SECTION. CONTRACTORS ARE REQUESTED TO PROVIDE A BID ESTIMATE TO COVER LANDSCAPE AND IRRIGATION MAINTENANCE FOR A PERIOD OF 90 CALENDAR DAYS COMMENCING AFTER ACCEPTANCE.

S. MAINTENANCE (ALTERNATE BID ITEM)

1. CONTRACTORS ARE REQUESTED TO PROVIDE A BID ESTIMATE FOR MAINTENANCE FOLLOWING THE INITIAL 90–DAY MAINTENANCE PERIOD ON A COST–PER–MONTH BASIS.

T. FINAL INSPECTION AND ACCEPTANCE OF WORK

1. FINAL INSPECTION AT THE END OF THE WARRANTY PERIOD SHALL BE ON PLANTING, CONSTRUCTION AND ALL OTHER INCIDENTAL WORK PERTAINING TO THIS CONTRACT. ANY REPLACEMENT AT THIS TIME SHALL BE SUBJECT TO THE SAME ONE (1) YEAR WARRANTY (OR AS SPECIFIED BY THE LANDSCAPE ARCHITECT OR OWNER IN WRITING) BEGINNING WITH THE TIME OF REPLACEMENT AND ENDING WITH THE SAME INSPECTION AND ACCEPTANCE HEREIN DESCRIBED.

U. WARRANTY

1. THE LIFE AND SATISFACTORY CONDITION OF ALL PLANT MATERIAL INSTALLED BY THE LANDSCAPE CONTRACTOR SHALL BE WARRANTED BY THE CONTRACTOR FOR A MINIMUM OF ONE (1) CALENDAR YEAR COMMENCING AT THE TIME OF CERTIFICATION OF ACCEPTABILITY BY THE OWNER'S REPRESENTATIVE.
2. REPLACEMENT: ANY PLANT NOT FOUND IN A HEALTHY GROWING CONDITION AT THE END OF THE WARRANTY PERIOD SHALL BE REMOVED FROM THE SITE AND REPLACED AS SOON AS WEATHER CONDITIONS PERMIT. ALL REPLACEMENTS SHALL BE PLANTS OF THE SAME KIND AND SIZE AS SPECIFIED IN THE PLANT LIST. THEY SHALL BE FURNISHED PLANTED AND MULCHED AS SPECIFIED UNDER "PLANTING", AT NO ADDITIONAL COST TO THE OWNER.
3. IN THE EVENT THE OWNER DOES NOT CONTRACT WITH THE CONTRACTOR FOR LANDSCAPE (AND IRRIGATION) MAINTENANCE, THE CONTRACTOR IS ENCOURAGED TO VISIT THE PROJECT SITE PERIODICALLY DURING THE ONE YEAR WARRANTY PERIOD TO EVALUATE MAINTENANCE PROCEDURES BEING PERFORMED BY THE OWNER, AND SHALL NOTIFY THE OWNER IN WRITING OF MAINTENANCE PROCEDURES OR CONDITIONS WHICH THREATEN VIGOROUS AND HEALTHY PLANT GROWTH. IT IS SUGGESTED SUCH SITE VISITS SHALL BE CONDUCTED A MINIMUM OF ONCE PER MONTH FOR A PERIOD OF TWELVE (12) MONTHS FROM THE DATE OF ACCEPTANCE.

CONSTRUCTION DOCUMENTS

No.	REVISIONS	DATE	BY

Kimley»Horn

EDT Sign of Quality

PROFESSIONAL ENGINEER
GEORGE BALABAN, P.E
0–51817–1B
U.S. VIRGIN ISLANDS
06/09/2026

KHA PROJECT 045826000
DATE JUNE 2026
SCALE AS SHOWN
DESIGNED BY KD/GP
DRAWN BY KD
CHECKED BY GP

LANDSCAPE NOTES AND DETAILS

LBJ PUMP STATION
PREPARED FOR
VIWMA

SHEET NUMBER
L-05

Plotted By:Davis, Krysztof Sheet Set:FEC Layout:L-05 LANDSCAPE NOTES AND DETAILS June 24, 2026 01:14:54pm K:\FTL_Civil\045 Jobs\045826000 LBJ Pump Station\Design\CADD\PlanSheets\L-05 LANDSCAPE NOTES AND DETAILS.dwg
This document, together with the concepts and designs presented herein, as an instrument of service, is intended only for the specific purpose and client for which it was prepared. Reuse of and improper reliance on this document without written authorization and adaptation by Kimley-Horn and Associates, Inc. shall be without liability to Kimley-Horn and Associates, Inc.

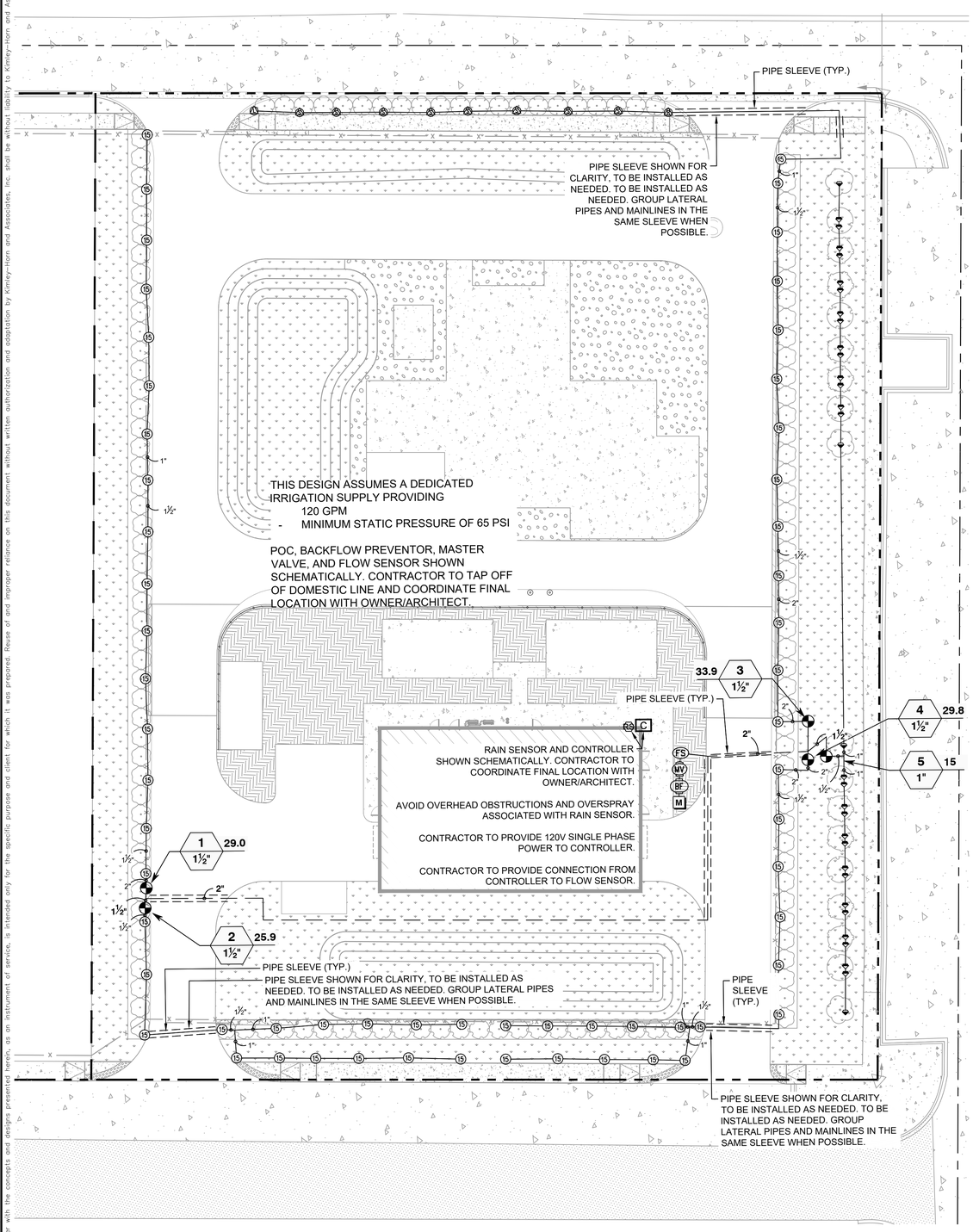

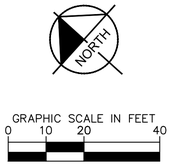

IRRIGATION SCHEDULE

SYMBOL	MANUFACTURER/MODEL/DESCRIPTION	QTY	PSI
EST LCS RCS CST SST	RAIN BIRD 1812-PRS-U 15 STRIP SERIES SHRUB SPRAY, 12IN. POP-UP SPRINKLER WITH CO-MOLDED WIPER SEAL. SIDE AND BOTTOM INLET. 1/2IN. NPT FEMALE THREADED INLET. WITH PRESSURE REGULATING DEVICE.	10	30
8 08HE-VAN 12 12HE-VAN 10 10HE-VAN 15 15HE-VAN	RAIN BIRD 1812-PRS-U HE-VAN SERIES SHRUB SPRAY, 12IN. POP-UP SPRINKLER WITH CO-MOLDED WIPER SEAL. SIDE AND BOTTOM INLET. 1/2IN. NPT FEMALE THREADED INLET. WITH PRESSURE REGULATING DEVICE.	61	30
1401 1402 1404	RAIN BIRD 1806-1400 FLOOD FLOOD BUBBLER 6.0IN. POPUP, INSTALL W/ PA-80 ADAPTER.	32	30

SYMBOL	MANUFACTURER/MODEL/DESCRIPTION	QTY
	RAIN BIRD PESB 1IN., 1-1/2IN., 2IN., 3IN. PLASTIC INDUSTRIAL REMOTE CONTROL VALVE. LOW FLOW OPERATING CAPABILITY, GLOBE CONFIGURATION. WITH SCRUBBER TECHNOLOGY FOR RELIABLE PERFORMANCE IN DIRTY WATER IRRIGATION APPLICATIONS.	5
MV	RAIN BIRD PESB (2) 2" 1IN., 1-1/2IN., 2IN., 3IN. PLASTIC INDUSTRIAL MASTER VALVES. LOW FLOW OPERATING CAPABILITY, GLOBE CONFIGURATION. WITH SCRUBBER TECHNOLOGY FOR RELIABLE PERFORMANCE IN DIRTY WATER IRRIGATION APPLICATIONS.	1
BF	BACKFLOW PREVENTER 2" REFER TO CIVIL DRAWINGS.	1
C	RAIN BIRD ESPLXME2P-LXMMSS 12 STATION, TRADITIONALLY-WIRED, PRO SMART (MODULE INCLUDED), COMMERCIAL CONTROLLER. INDOOR/OUTDOOR, PLASTIC WALL-MOUNT ENCLOSURE. INSTALL IN LXMMSS STAINLESS STEEL, WALL-MOUNTED CABINET.	1
RS	RAIN BIRD RSD-BEX RAIN SENSOR, WITH METAL LATCHING BRACKET, EXTENSION WIRE.	1
FS	FLOW SENSOR	1
M	WATER METER 2" REFER TO CIVIL DRAWINGS	1
	IRRIGATION LATERAL LINE: PVC CLASS 200 SDR 21	+/- 1,352 LF
	IRRIGATION MAINLINE: PVC SCHEDULE 80	+/- 320.9 LF
	PIPE SLEEVE: PVC SCHEDULE 80	AS NEEDED

Valve Callout
- Valve Number
- Valve Flow
- Valve Size

VALVE SCHEDULE

NUMBER	MODEL	SIZE	TYPE	GPM	WIRE	PSI	PSI @ POC	PRECIP
1	RAIN BIRD PESB	1-1/2"	SHRUB SPRAY	28.96	265.3	35.8	55.4	0.79 in/h
2	RAIN BIRD PESB	1-1/2"	SHRUB SPRAY	25.95	264.9	35.0	54.3	1.16 in/h
3	RAIN BIRD PESB	1-1/2"	SHRUB SPRAY	33.92	62.9	37.6	56.0	0.98 in/h
4	RAIN BIRD PESB	1-1/2"	SHRUB SPRAY	29.8	63.9	35.3	53.5	1.09 in/h
5	RAIN BIRD PESB	1"	BUBBLER	15	69.7	33.5	51.2	2.07 in/h
	Common Wire				320.9			

SLEEVING CHART

SLEEVE SIZE SCHEDULE (SCH 40)

PIPE SIZE	SLEEVE SIZE
1"	2"
1 1/2"	4"
2"	4"
2 1/2"	6"
3", 4"	6"
5", 6"	8"
7", 8"	10"

*CONTRACTOR SHALL USE THE ABOVE SCHEDULE TO SIZE SLEEVES. THE PIPE SIZE IN THE ABOVE SCHEDULE SHALL REFLECT THE CUMULATIVE VALUE OF ALL PIPES GRAPHICALLY SHOWN THROUGH SLEEVE.

LEGEND

- PROPERTY LINE/RIGHT-OF-WAY
- PROP BUILDING

IRRIGATION CONTRACTOR NOTES:

1. THE IRRIGATION CONTRACTOR SHALL SECURE ANY AND ALL NECESSARY PERMITS FOR THE WORK PRIOR TO COMMENCEMENT OF HIS/HER OPERATIONS ON-SITE. COPIES OF THE PERMITS SHALL BE SENT TO THE OWNER/GENERAL CONTRACTOR.
2. IF APPLICABLE, WORK IN THE R.O.W. SHALL CONFORM TO THE STANDARDS AND SPECIFICATIONS OF LOCAL AND/OR TERRITORY HIGHWAY JURISDICTION.
3. CONTRACTOR SHALL COORDINATE WITH PROPERTY OWNER FOR OPERATING PARAMETERS OF THE PROPOSED SYSTEM.
4. CONTRACTOR SHALL VERIFY CONTROLLER AND MAINLINE POINT OF CONNECTION AT PROJECT SITE WITH PROPERTY OWNER.
5. COORDINATE WITH PLANTING PLAN FOR PLANTER BED LOCATIONS AND TREE LOCATIONS.
6. ALL WIRING SHALL BE OF DIRECT BURIAL COPPER WIRE.
7. CONTRACTOR SHALL SUBMIT MODIFIED DESIGN AND COMPATIBLE EQUIPMENT LIST TO OWNER'S REPRESENTATIVE FOR APPROVAL PRIOR TO INSTALLATION, IN ACCORDANCE WITH THESE PARAMETERS:
   - 7.1. THE SYSTEM WILL PROVIDE 100% COVERAGE FOR ALL PROPOSED LANDSCAPE IMPROVEMENTS.
   - 7.2. ZONES SHALL BE SEPARATED BY WATER NEED AND EQUIPMENT. TURF IRRIGATION SHALL BE SEPARATE FROM SHRUB ZONES, BUBBLERS SEPARATE FROM SPRAYS, SPRAYS SEPARATE FROM ROTORS.
   - 7.3. SET HEADS 3" FROM BACK OF CURB.
   - 7.4. LOCATE ALL VALVES A MINIMUM OF 24" FROM BACK OF CURB OR EDGE OF PAVEMENT, UNLESS NOTED OTHERWISE.
   - 7.5. ALL PROPOSED TREES AND PALMS SHALL RECEIVE ONE BUBBLER, EACH.
8. VERIFY LOCATIONS OF ALL UNDERGROUND UTILITIES PRIOR TO INSTALLATION OF IRRIGATION SYSTEM. ALL UTILITIES AND STRUCTURES MAY NOT BE SHOWN ON THESE PLANS-CONTRACTOR SHALL VERIFY THEIR LOCATION.
9. ALL PRESSURE MAINLINES UNDER ASPHALT PAVEMENT SHALL BE PLACED WITHIN SLEEVES AS NOTED. WHERE ELECTRIC VALVE CONTROL LINES PASS THROUGH A SLEEVE WITH OTHER MAIN OR LATERAL LINES THEY SHALL BE CONTAINED WITHIN A SEPARATE, SMALLER CONDUIT. ALL SLEEVES SHALL BE SIZED TWO PIPE SIZES GREATER THAN PIPE IT CARRIES.
11. CONTRACTOR SHALL SUBMIT DETAILED LAYOUT OF IRRIGATION SHOP DRAWINGS FOR REVIEW AND EVALUATION BY LANDSCAPE ARCHITECT. CONTRACTOR SHALL NOT PROCURE, FABRICATE, OR INSTALL IRRIGATION UNLESS A NO EXCEPTIONS TAKEN DETERMINATION HAS BEEN INDICATED IN WRITING BY THE LANDSCAPE ARCHITECT AFTER REVIEW AND EVALUATION OF REQUIRED SUBMITTAL.
12. CONTRACTOR SHALL PROVIDE "AS-BUILT" DRAWINGS OF THE FINAL INSTALLATION TO OWNER AT SUBSTANTIAL COMPLETION BEFORE RECEIVING FINAL PAYMENT. ALL SLEEVES UTILIZED BY THE IRRIGATION CONTRACTOR, WHETHER INSTALLED BY HIM OR NOT, SHALL BE LOCATED ON THE "AS-BUILT" DRAWINGS. THE DEPTH BELOW FINISH GRADE, TO THE NEAREST FOOT OF EACH END OF EACH SLEEVE SHALL BE NOTED AT EACH SLEEVE LOCATION ON THE "AS-BUILT" DRAWINGS.

CONSTRUCTION DOCUMENTS

No.	REVISIONS	DATE	BY

Kimley»Horn

PROFESSIONAL ENGINEER
GEORGE BALABAN, P.E
0-51817-1B
U.S. VIRGIN ISLANDS
03/09/2026

KHA PROJECT 045826000
DATE JUNE 2026
SCALE AS SHOWN
DESIGNED BY KD/GP
DRAWN BY KD
CHECKED BY GP

IRRIGATION PLAN

LBJ PUMP STATION
PREPARED FOR
VIWMA

SHEET NUMBER
IR-01

Plotted By:Davis, Kryztof Sheet Set:FEC Layout:IRRIGATION PLAN June 24, 2026 01:15:13pm K:\FTL_Civil\045 Jobs\045826000 LBJ Pump Station\Landscape\CADD\PlanSheets\IRRIGATION PLAN.dwg
This document, together with the concepts and designs presented herein, as an instrument of service, is intended only for the specific purpose and client for which it was prepared. Reuse of and improper reliance on this document without written authorization and adaptation by Kimley-Horn and Associates, Inc. shall be without liability to Kimley-Horn and Associates, Inc.

GENERAL IRRIGATION SPECIFICATIONS AND NOTES

UNDERGROUND IRRIGATION SYSTEM

PART I: GENERAL

1.01 SCOPE

A. THE WORK COVERED BY THIS SPECIFICATION SHALL INCLUDE THE FURNISHING OF ALL LABOR, MATERIALS, TOOLS AND EQUIPMENT NECESSARY TO PERFORM AND COMPLETE THE INSTALLATION OF AN AUTOMATIC IRRIGATION SYSTEM AS SPECIFIED HEREIN AND AS SHOWN ON THE DRAWINGS AND ANY INCIDENTAL WORK NOT SHOWN OR SPECIFIED WHICH CAN REASONABLY BE DETERMINED TO BE PART OF THE WORK AND NECESSARY TO PROVIDE A COMPLETE AND FUNCTIONAL SYSTEM.

B. THE WORK COVERED BY THIS SPECIFICATION ALSO INCLUDES ALL PERMITS, FEDERAL, STATE AND LOCAL TAXES AND ALL OTHER COSTS, BOTH FORESEEABLE AND UNFORESEEABLE AT THE TIME OF CONSTRUCTION.

C. NO DEVIATION FROM THESE SPECIFICATIONS, THE ACCOMPANYING DRAWINGS, OR AGREEMENT IS AUTHORIZED OR SHALL BE MADE WITHOUT PRIOR WRITTEN AUTHORIZATION SIGNED BY THE OWNER OR HIS DULY APPOINTED REPRESENTATIVE.

1.02 QUALITY ASSURANCE

A. INSTALLER QUALIFICATIONS: A FIRM SPECIALIZING IN IRRIGATION WORK WITH NOT LESS THAN FIVE (5) YEARS OF EXPERIENCE IN INSTALLING IRRIGATION SYSTEMS SIMILAR TO THOSE REQUIRED FOR THIS PROJECT.

B. COORDINATION: COORDINATE AND COOPERATE WITH OTHER CONTRACTORS TO ENABLE THE WORK TO PROCEED AS RAPIDLY AND EFFICIENTLY AS POSSIBLE.

C. INSPECTION OF SITE: THE CONTRACTOR SHALL ACQUAINT HIMSELF WITH ALL SITE CONDITIONS, INCLUDING UNDERGROUND UTILITIES BEFORE CONSTRUCTION IS TO BEGIN. CONTRACTOR SHALL COORDINATE PLACEMENT OF UNDERGROUND MATERIALS WITH CONTRACTORS PREVIOUSLY WORKING UNDERGROUND IN THE VICINITY OR THOSE SCHEDULED TO DO UNDERGROUND WORK IN THE VICINITY. CONTRACTOR IS RESPONSIBLE FOR MINOR ADJUSTMENTS IN THE LAYOUT OF THE WORK TO ACCOMMODATE EXISTING FACILITIES.

D. PROTECTION OF EXISTING PLANTS AND SITE CONDITIONS: THE CONTRACTOR SHALL TAKE NECESSARY PRECAUTIONS TO PROTECT SITE CONDITIONS TO REMAIN. SHOULD DAMAGES BE INCURRED, THIS CONTRACTOR SHALL REPAIR THE DAMAGE TO ITS ORIGINAL CONDITION AT HIS OWN EXPENSE. ANY DISRUPTION, DESTRUCTION, OR DISTURBANCE OF ANY EXISTING PLANT, TREE, SHRUB, OR TURF, OR ANY STRUCTURE SHALL BE COMPLETELY RESTORED TO THE SATISFACTION OF THE OWNER AND HIS REPRESENTATIVES, SOLELY AT THE CONTRACTOR'S EXPENSE.

E. PROTECTION OF WORK AND PROPERTY: THE CONTRACTOR SHALL BE LIABLE FOR AND SHALL TAKE THE FOLLOWING ACTIONS AS REQUIRED WITH REGARD TO DAMAGE TO ANY OF THE OWNER'S PROPERTY.

1. ANY EXISTING BUILDING, EQUIPMENT, PIPING, PIPE COVERINGS, ELECTRICAL SYSTEMS, SEWERS, SIDEWALKS, ROADS, GROUNDS, LANDSCAPING OR STRUCTURE OF ANY KIND (INCLUDING WITHOUT LIMITATION, DAMAGE FROM LEAKS IN THE PIPING SYSTEM BEING INSTALLED OR HAVING BEEN INSTALLED BY CONTRACTOR) DAMAGED BY THE CONTRACTOR, OR BY HIS AGENTS, EMPLOYEES, OR SUBCONTRACTORS, DURING THE COURSE OF HIS WORK, WHETHER THROUGH NEGLIGENCE OR OTHERWISE, SHALL BE REPLACED OR REPAIRED BY CONTRACTOR AT HIS OWN EXPENSE IN A MANNER SATISFACTORY TO OWNER, WHICH REPAIR OR REPLACEMENT SHALL BE A CONDITION PRECEDENT TO OWNER'S OBLIGATION TO MAKE FINAL PAYMENT UNDER THE CONTRACT.

2. CONTRACTOR SHALL ALSO BE RESPONSIBLE FOR DAMAGE TO ANY WORK COVERED BY THESE SPECIFICATIONS BEFORE FINAL ACCEPTANCE OF THE WORK. HE SHALL SECURELY COVER ALL OPENINGS INTO THE SYSTEMS AND COVER ALL APPARATUS, EQUIPMENT AND APPLIANCES, BOTH BEFORE AND AFTER BEING SET IN PLACE TO PREVENT OBSTRUCTIONS ON THE PIPES AND THE BREAKAGE, MISUSE OR DISFIGUREMENT OF THE APPARATUS, EQUIPMENT OR APPLIANCE.

3. ALL TRENCHING OR OTHER WORK UNDER THE LEAF CANOPY OF ANY AND ALL TREES SHALL BE DONE BY HAND OR BY OTHER METHODS SO THAT NO BRANCHES ARE DAMAGED IN ANY WAY. BUILDINGS, WALKS, WALLS, AND OTHER PROPERTY SHALL BE PROTECTED FROM DAMAGE. OPEN DITCHES LEFT EXPOSED SHALL BE FLAGGED AND BARRICADED BY THE CONTRACTOR BY APPROVED MEANS. THE CONTRACTOR SHALL RESTORE DISTURBED AREAS TO THEIR ORIGINAL CONDITION.

4. THE CONTRACTOR SHALL BE RESPONSIBLE FOR REQUESTING THE PROPER UTILITY COMPANY TO STAKE THE EXACT LOCATION OF ANY UNDERGROUND LINES INCLUDING BUT NOT LIMITED TO ELECTRIC, GAS, TELEPHONE SERVICE, WATER, AND CABLE. THE CONTRACTOR SHALL TAKE WHATEVER PRECAUTIONS ARE NECESSARY TO PROTECT THESE UNDERGROUND LINES FROM DAMAGE. IN THE EVENT DAMAGE DOES OCCUR, ALL DAMAGE SHALL BE COMPLETELY REPAIRED TO ITS ORIGINAL CONDITION, AT NO ADDITIONAL COST TO THE OWNER.

A. CODES AND INSPECTIONS: THE ENTIRE INSTALLATION SHALL COMPLY FULLY WITH ALL LOCAL AND STATE LAWS AND ORDINANCES AND WITH ALL ESTABLISHED CODES ARRANGE FOR ALL NECESSARY INSPECTIONS AND SHALL PAY ALL FEES AND EXPENSES IN CONNECTION WITH SAME, AS PART OF THE WORK UNDER THIS CONTRACT. UPON COMPLETION OF THE WORK, HE SHALL FURNISH TO THE "OWNER" ALL INSPECTION CERTIFICATES CUSTOMARILY ISSUED IN CONNECTION WITH THE CLASS OF WORK INVOLVED.

B. THE CONTRACTOR SHALL KEEP ON HIS WORK, DURING ITS PROGRESS, A COMPETENT SUPERINTENDENT AND ANY NECESSARY ASSISTANTS, ALL SATISFACTORY TO THE OWNER, OR OWNER'S REPRESENTATIVE.

C. THE SUPERINTENDENT SHALL REPRESENT THE CONTRACTOR IN HIS ABSENCE AND ALL DIRECTIONS GIVEN TO HIM SHALL BE AS BINDING AS IF GIVEN TO THE CONTRACTOR.

D. THE OWNER'S LANDSCAPE ARCHITECT OR DESIGNATED INDIVIDUAL SHALL HAVE FULL AUTHORITY TO APPROVE OR REJECT WORK PERFORMED BY THE CONTRACTOR. THE OWNER'S AUTHORIZED REPRESENTATIVE SHALL ALSO HAVE FULL AUTHORITY TO MAKE FIELD CHANGES THAT ARE DEEMED NECESSARY.

E. ON-SITE OBSERVATION: AT ANY TIME DURING THE INSTALLATION OF THE IRRIGATION SYSTEM BY THE CONTRACTOR, THE OWNER OR LANDSCAPE ARCHITECT MAY VISIT THE SITE TO OBSERVE WORK UNDERWAY. UPON REQUEST, THE CONTRACTOR SHALL BE REQUIRED TO UNCOVER SPECIFIED WORK AS DIRECTED BY THE OWNER OR MATERIAL, WORKMANSHIP OR METHOD OF INSTALLATION NOT MEET THE STANDARDS SPECIFIED HEREIN, THE CONTRACTOR SHALL REPLACE THE WORK AT HIS OWN EXPENSE.

F. WORKMANSHIP: ALL WORK SHALL BE INSTALLED BY QUALIFIED, SKILLED PERSONNEL, PROFICIENT IN THE TRADES REQUIRED, IN A NEAT, ORDERLY, AND RESPONSIBLE MANNER WITH RECOGNIZED STANDARDS OF WORKMANSHIP. THE CONTRACTOR SHALL HAVE HAD CONSIDERABLE EXPERIENCE AND DEMONSTRATED ABILITY IN THE INSTALLATION OF SPRINKLER IRRIGATION SYSTEMS OF THIS TYPE.

1.03 SUBMITTALS

ALL MATERIALS SHALL BE THOSE SPECIFIED AND/OR APPROVED BY THE LANDSCAPE ARCHITECT.

A. PRODUCT DATA: AFTER THE AWARD OF THE CONTRACT AND PRIOR TO BEGINNING WORK, THE CONTRACTOR SHALL SUBMIT FOR APPROVAL BY THE OWNER AND LANDSCAPE ARCHITECT, TWO COPIES OF THE COMPLETE LIST OF MATERIALS, MANUFACTURER'S TECHNICAL DATA, AND INSTALLATION INSTRUCTIONS WHICH HE PROPOSES TO INSTALL.

B. COMMENCE NO WORK BEFORE APPROVAL OF MATERIAL LIST AND DESCRIPTIVE MATERIAL BY THE LANDSCAPE ARCHITECT.

C. RECORD DRAWINGS: THE CONTRACTOR SHALL RECORD ON REPRODUCIBLES, ALL CHANGES THAT MAY BE MADE DURING ACTUAL INSTALLATION OF THE SYSTEM. PROVIDE CONTROLLER SEQUENCING AND CONTROL VALVE LOCATIONS.

1. IMMEDIATELY UPON INSTALLATION OF ANY PIPING, VALVES, WIRING, SPRINKLERS, ETC., IN LOCATIONS OTHER THAN SHOWN ON THE ORIGINAL DRAWINGS OR OF SIZES OTHER THAN INDICATED, THE CONTRACTOR SHALL CLEARLY INDICATE SUCH CHANGES ON A SET OF BLUELINE PRINTS. RECORDS SHALL BE MADE ON A DAILY BASIS. ALL RECORDS SHALL BE NEAT AND SUBJECT TO THE APPROVAL OF THE OWNER.

2. THE CONTRACTOR SHALL ALSO INDICATE ON THE RECORD PRINTS THE LOCATION OF ALL WIRE SPLICES, ORIGINAL OR DUE TO REPAIR, THAT ARE INSTALLED UNDERGROUND IN A LOCATION OTHER THAN THE CONTROLLER PEDESTAL, REMOTE CONTROL VALVE BOX, POWER SOURCE OR CONNECTION TO A VALVE-IN-HEAD SPRINKLER.

3. THESE DRAWINGS SHALL ALSO SERVE AS WORK PROGRESS SHEETS. THE CONTRACTOR SHALL MAKE NEAT AND LEGIBLE NOTATIONS THEREON DAILY AS THE WORK PROCEEDS, SHOWING THE WORK AS ACTUALLY INSTALLED. THESE DRAWINGS SHALL BE AVAILABLE AT ALL TIMES FOR REVIEW AND SHALL BE KEPT IN A LOCATION DESIGNATED BY THE OWNER'S REPRESENTATIVE.

4. PROGRESS PAYMENT REQUEST AND RECORD DRAWING INFORMATION MUST BE APPROVED BY LANDSCAPE ARCHITECT BEFORE PAYMENT IS MADE.

5. IF IN THE OPINION OF THE OWNER OR HIS REPRESENTATIVE, THE RECORD DRAWING INFORMATION IS NOT BEING PROPERLY OR PROMPTLY RECORDED, CONSTRUCTION PAYMENT MAY BE STOPPED UNTIL THE PROPER INFORMATION HAS BEEN RECORDED AND SUBMITTED.

6. BEFORE THE DATE OF THE FINAL SITE OBSERVATION AND APPROVAL, THE CONTRACTOR SHALL DELIVER ONE SET (COPIES) OF REPRODUCIBLE RECORD DRAWING PLANS AND NOTES TO THE LANDSCAPE ARCHITECT. RECORD DRAWING INFORMATION SHALL BE APPROVED BY THE LANDSCAPE ARCHITECT PRIOR TO SUBMITTAL TO OWNER FOR FINAL PAYMENTS, INCLUDING RETENTIONS.

D. OPERATIONS AND MAINTENANCE MANUALS: THE CONTRACTOR SHALL PREPARE AND DELIVER TO THE OWNER, OR HIS DESIGNATED REPRESENTATIVE WITHIN TEN (10) CALENDAR DAYS PRIOR TO COMPLETION OF CONSTRUCTION, A HARD COVER BINDER WITH THREE RINGS CONTAINING THE FOLLOWING INFORMATION:

1. INDEX SHEET STATING THE CONTRACTOR'S ADDRESS AND BUSINESS TELEPHONE NUMBER, LIST OF EQUIPMENT WITH NAME(S) AND ADDRESS(ES) OF LOCAL MANUFACTURER'S REPRESENTATIVE(S).
2. CATALOG AND PARTS SHEETS ON EVERY MATERIAL AND EQUIPMENT INSTALLED UNDER THIS CONTRACT.
3. COMPLETE OPERATING AND MAINTENANCE INSTRUCTION ON ALL MAJOR EQUIPMENT. INCLUDE INITIAL CONTROLLER SCHEDULE AND RECOMMENDED SCHEDULE AFTER ESTABLISHMENT PERIOD.
4. DEMONSTRATE TO AND PROVIDE THE OWNER'S MAINTENANCE PERSONNEL WITH INSTRUCTIONS FOR MAJOR EQUIPMENT AND SHOW EVIDENCE IN WRITING TO THE OWNER, OR HIS DESIGNATED REPRESENTATIVE AT THE CONCLUSION OF THE PROJECT THAT THIS SERVICE HAS BEEN RENDERED.

1.04 EXPLANATION OF DRAWINGS

A. DUE TO THE SCALE OF THE DRAWINGS, IT IS NOT POSSIBLE TO INDICATE ALL OFFSETS, FITTINGS AND SLEEVES WHICH MAY BE REQUIRED. THE CONTRACTOR SHALL CAREFULLY INVESTIGATE THE STRUCTURAL AND FINISHED CONDITIONS AFFECTING ALL OF THE WORK AND PLAN HIS WORK ACCORDINGLY, FURNISHING SUCH OFFSETS, FITTINGS AND SLEEVES AS MAY BE REQUIRED TO MEET SUCH CONDITIONS.

B. THE DRAWINGS ARE GENERALLY DIAGRAMMATIC AND INDICATIVE OF THE WORK TO BE INSTALLED. THE WORK SHALL BE INSTALLED IN SUCH A MANNER AS TO AVOID CONFLICTS BETWEEN IRRIGATION SYSTEMS, PLANTING AND ARCHITECTURAL FEATURES. DEVIATIONS SHALL BE BROUGHT TO THE LANDSCAPE ARCHITECTS ATTENTION.

C. ALL WORK CALLED FOR A ON THE DRAWINGS BY NOTES OR DETAILS SHALL BE FURNISHED AND INSTALLED WHETHER OR NOT SPECIFICALLY MENTIONED IN THE SPECIFICATIONS.

D. THE CONTRACTOR SHALL NOT WILLFULLY INSTALL THE IRRIGATION SYSTEM AS SHOWN ON THE DRAWINGS WHEN IT IS OBVIOUS IN THE FIELD THAT OBSTRUCTIONS, GRADE DIFFERENCES OR DISCREPANCIES IN AREA DIMENSIONS EXIST THAT MIGHT NOT HAVE BEEN KNOWN IN ENGINEERING. SUCH OBSTRUCTIONS OR DIFFERENCES SHOULD BE BROUGHT TO THE ATTENTION OF THE LANDSCAPE ARCHITECT. IN THE EVENT THAT NOTIFICATION IS NOT PERFORMED, THE CONTRACTOR SHALL ASSUME FULL RESPONSIBILITY FOR ANY REVISION NECESSARY.

E. IF, IN THE OPINION OF THE LANDSCAPE ARCHITECT, THE LABOR FURNISHED BY THE CONTRACTOR IS INCOMPETENT, UNSKILLED, OR UNRELIABLE, HIS EQUIPMENT INADEQUATE, IMPROPER OR UNSAFE, OR IF THE CONTRACTOR SHALL FAIL TO CONTINUOUSLY AND DILIGENTLY EXECUTE THE CONSTRUCTION, THE LANDSCAPE ARCHITECT OR OWNER SHALL, IN WRITING, INSTRUCT THE CONTRACTOR TO REMOVE ALL SUCH CAUSES OF NONCOMPLIANCE AND THE CONTRACTOR SHALL PROMPTLY COMPLY.

F. THE CONTRACTOR SHALL BE RESPONSIBLE FOR FULL AND COMPLETE COVERAGE OF ALL IRRIGATION AREAS. THE LANDSCAPE ARCHITECT SHALL BE NOTIFIED OF ANY NECESSARY ADJUSTMENTS AT NO ADDITIONAL COST TO THE OWNER. ANY REVISIONS TO THE IRRIGATION SYSTEM MUST BE SUBMITTED AND ANSWERED IN WRITTEN FORM, ALONG WITH ANY CHANGE IN CONTRACT PRICE. LAYOUT MAY BE MODIFIED, IF NECESSARY TO OBTAIN COVERAGE. SPACING NOT TO EXCEED 60% OF THE DIAMETER.

PART II: PRODUCTS

2.01 MATERIALS

A. MATERIAL AND EQUIPMENT SHALL BE SUPPLIED BY THE CONTRACTOR. NO SUBSTITUTIONS SHALL BE ALLOWED WITHOUT THE PRIOR WRITTEN APPROVAL OF THE OWNER/LANDSCAPE ARCHITECT. THE CONTRACTOR SHALL INSPECT ALL MATERIALS AND EQUIPMENT PRIOR TO INSTALLATION, AND DEFECTIVE MATERIALS SHALL BE REPLACED WITH THE PROPER MATERIALS AND EQUIPMENT. THOSE ITEMS USED IN THE INSTALLATION FOUND TO BE DEFECTIVE, IMPROPERLY INSTALLED OR NOT AS SPECIFIED, SHALL BE REMOVED AND THE PROPER MATERIALS AND EQUIPMENT INSTALLED IN THE PROPER MANNER, AS INTERPRETED BY THE OWNER/LANDSCAPE ARCHITECT. THE CONTRACTOR SHALL REMOVE ALL DAMAGED AND DEFECTIVE PIPE AND EQUIPMENT FROM THE SITE.

2.02 IRRIGATION PIPING

A. GENERAL PROVISIONS: ALL MATERIALS THROUGHOUT THE SYSTEM SHALL BE NEW AND IN PERFECT CONDITION UNLESS OTHERWISE DIRECTED BY THE LANDSCAPE ARCHITECT.

B. POLYVINYL CHLORIDE PIPE (PVC): (WHERE INDICATED ON PLAN, USE NON-POTABLE PURPLE PIPING.)

1. LATERALS: PVC SHALL CONFORM TO THE REQUIREMENTS OF ASTM DESIGNATION D 2241, CLASS 1120 OR 1220. ALL LATERAL PIPING LESS THAN 3" IN DIAMETER SHALL BE CLASS 200 SDR-21.

2. MAIN LINE UNDER PRESSURE: PVC SHALL CONFORM TO THE REQUIREMENTS OF ASTM DESIGNATION D 2241, CLASS 1120 OR 1220, SCHEDULE 80 WITH BELLED END FOR SOLVENT WELD CONNECTION.

3. PIPE MARKINGS: ALL PVC PIPE SHALL BEAR THE FOLLOWING MARKINGS:

a. MANUFACTURER'S NAME
b. NOMINAL PIPE SIZE
c. SCHEDULE OR CLASS
d. PRESSURE RATING OF PSI
e. NSF (NATIONAL SANITATION FOUNDATION) APPROVAL
f. DATE OF EXTRUSION

2.03 PVC JOINTS

A. JOINTS IN PVC PIPE SMALLER THAN 3" SHALL BE SOLVENT WELDED IN ACCORDANCE WITH THE RECOMMENDATIONS OF THE PIPE MANUFACTURER; THE SOLVENT CLEANER AND WELDING COMPOUND FURNISHED WITH THE PIPE.

2.04 THREADED CONNECTIONS

A. THREADED PVC CONNECTIONS SHALL BE MADE UP USING TEFLON TAPE ONLY.

B. CONNECTION BETWEEN MAINLINE PIPE FITTINGS AND AUTOMATIC OR MANUAL CONTROL VALVES SHALL BE MADE USING SCHEDULE 80 THREADED FITTINGS AND NIPPLES.

2.05 SOLVENT CEMENT

A. GENERAL: PROVIDE SOLVENT CEMENT AND PRIMER FOR PVC SOLVENT WELD PIPE AND FITTINGS RECOMMENDED BY THE MANUFACTURER. PIPE JOINTS FOR SOLVENT WELD PIPE TO BE BELLED END. PIPE JOINTS FOR GASKETED PIPE TO BE INTRICAL RING TYPE. INSERT GASKETS WILL NOT BE ACCEPTED.

B. THRUST BLOCKS: MAIN LINE PIPING 3" OR GREATER IN DIAMETER SHALL HAVE THRUST BLOCKS SIZED AND PLACED IN ACCORDANCE WITH THE PIPE MANUFACTURER'S RECOMMENDATIONS OR, IN THE ABSENCE OF SPECIFIED RECOMMENDATIONS BY THE PIPE MANUFACTURER. 3000 PSI CONCRETE THRUSTS SHALL BE PROPERLY INSTALLED AT TEES, ELBOWS, 45'S, CROSSES, REDUCERS, PLUGS, CAPS AND VALVES.

CONSTRUCTION DOCUMENTS

No.	REVISIONS	DATE	BY

Kimley»Horn

Sign of Quality

PROFESSIONAL ENGINEER
GEORGE BALABAN, P.E
0-51817-1B
U.S. VIRGIN ISLANDS
07/09/2026

KHA PROJECT 045826000
DATE JUNE 2026
SCALE AS SHOWN
DESIGNED BY KD/GP
DRAWN BY KD
CHECKED BY GP

IRRIGATION NOTES AND DETAILS

LBJ PUMP STATION
PREPARED FOR
VIWMA

SHEET NUMBER
IR-02

Plotted By:Davis, Krystof Sheet Set:FEC Layout:Irrigation Notes June 24, 2026 01:15:26pm K:\FTL_Civil\045 Jobs\045826000 LBJ Pump Station\Landscape\CADD\PlanSheets\LANDSCAPE AND IRRIGATION NOTES AND DETAILS.dwg
This document, together with the concepts and designs presented herein, as an instrument of service, is intended only for the specific purpose and client for which it was prepared. Reuse of and improper reliance on this document without written authorization and adaptation by Kimley-Horn and Associates, Inc. shall be without liability to Kimley-Horn and Associates, Inc.

2.06 PIPE AND WIRE SLEEVES

A. SLEEVES TO BE INSTALLED:

1. THE CONTRACTOR SHALL INSTALL IRRIGATION SYSTEM PIPE AND WIRE SLEEVES CONFORMING TO THE FOLLOWING:

a. ALL PIPE SLEEVES SHALL EXTEND A MINIMUM OF 36" BEYOND THE EDGES OF PAVEMENT.

b. ALL PIPE SLEEVES TO BE INSTALLED BENEATH FUTURE/EXISTING ROAD SURFACES SHALL BE PVC PIPE SCHEDULE 80 AND AS SHOWN ON PLANS.

c. ALL IRRIGATION SYSTEM WIRES SHALL BE SLEEVED SEPARATELY FROM MAIN OR LATERAL LINES.

d. ALL PIPE SLEEVES SHALL BE INSTALLED AT THE MINIMUM DEPTH SPECIFIED FOR MAIN LINES, LATERAL LINES, AND ELECTRIC WIRE.

e. CONTRACTOR SHALL COORDINATE ALL PIPE SLEEVE LOCATIONS AND DEPTHS PRIOR TO INITIATING INSTALLATION OF THE IRRIGATION SYSTEM.

2.09 AUTOMATIC CONTROL VALVE

A. THE AUTOMATIC REMOTE CONTROL VALVES SHALL BE AS SPECIFIED ON THE PLANS, OR APPROVED EQUAL.

2.10 GATE VALVES

A. GATE VALVES FOR 3/4" THROUGH 2-1/2" SHALL BE OF BRASS OR BRONZE CONSTRUCTION, SOLID WEDGE, IPS THREADS, NON-RISING STEM WITH WHEEL OPERATING HANDLE, FOR A CONTINUOUS WORKING PRESSURE OF 150 PSI.

B. GATE VALVES FOR 3" AND LARGER: IRON BODY, BRASS OR BRONZE MOUNTED AWWA GATE VALVES, WITH A CLEAR WATERWAY EQUAL TO THE FULL NOMINAL DIAMETER OF THE VALVE, RUBBER GASKET FOR A CONTINUOUS WORKING PRESSURE OF 150P PSI. VALVE SHALL BE EQUIPPED WITH A SQUARE OPERATING NUT.

2.11 VALVE BOXES

A. FOR GATE VALVES, USE AMETEK #10-181-014 BOX WITH #10-181-015 LOCKING LID, OR AS PER THE DRAWINGS.

B. FOR CONTROL VALVES 3/4" THROUGH 2", THE DRIP VALVE ASSEMBLIES, USE AMETEK #10-181-014 BOX WITH #10-181-015 LOCKING LID, OR SIZED AS NECESSARY TO EFFECTIVELY HOUSE THE EQUIPMENT

C. FOR CONTROL WIRING SPLICES, USE AMETEK #10-181-014 BOX WITH #10-181-015 LOCKING LID, OR AS PER THE DRAWINGS.

2.12 IRRIGATION WIRING

A. WIRING USED FOR CONNECTING THE ELECTRIC CONTROL VALVES TO THE CONTROLLERS SHALL BE TYPE UF, 600 VOLT, SINGLE STRAND, SOLID COPPER WITH PVC INSULATION 4/64" THICK. SIZE SHALL BE 14 GAUGE, RED FOR "HOT" OR LEAD WIRES, AND COMMON WIRE TO BE 14 GAUGE, WHITE IN COLOR.

B. CONTRACTOR SHALL PERFORM AN OHM TEST ON GROUND TO ASSURE ADEQUATE PROTECTION AGAINST SURGES AND INDIRECT LIGHTNING STRIKES.

2.13 MISCELLANEOUS MATERIALS

A. DRAINAGE BACKFILL: CLEANED GRAVEL OR CRUSHED STONE, GRADED FROM 1" MAXIMUM TO 3/4" MINIMUM.

B. METALIZED UNDERGROUND TAPE: THE DETECTABLE, UNDERGROUND UTILITY MARKING TAPE SHALL CONSIST OF A MINIMUM: 5 MIL (0.005") OVERALL THICKNESS; FIVE-PLY COMPOSITION; ULTRA-HIGH MOLECULAR WEIGHT, 100% VIRGIN POLYETHYLENE; ACID, ALKALINE AND CORROSION RESISTANT; WITH NO LESS THAN 150 POUNDS OF TENSILE BREAK STRENGTH PER 6" WIDTH; COLOR-CODE IMPREGNATED WITH COLOR STABLE, LEAD-FREE, ORGANIC PIGMENTS SUITABLE FOR DIRECT BURIAL. TAPES UTILIZING REPROCESSED PLASTICS OR RESINS SHALL NOT BE ACCEPTABLE. THE DETECTABLE, UNDERGROUND UTILITY MARKING TAPE SHALL HAVE A 35 GAUGE (0.0035") SOLID ALUMINUM FOIL, CORE ENCAPSULATED WITHIN A 2.55 MIL (0.00255") POLYETHYLENE BACKING AND A 0.6 MIL (0.006") PET COVER COATING. THE LAMINATE ON EACH SIDE SHALL CONSIST OF A 0.75 MIL (0.00075") LAYER OF HOT LPDE, POLY-FUSING THE "SANDWICH" WITHOUT USE OF ADHESIVES.

2.14 AUTOMATIC CONTROL SYSTEM

1. AN INDEPENDENT STATION CONTROLLER: FURNISH A SOLID STATE CONTROLLER, AS SPECIFIED ON THE PLANS.

a. EACH STATION SHALL BE CAPABLE OF TIMING FROM ZERO (0) MINUTE TO 99 MINUTES PER STATION IN ONE (1) MINUTE INCREMENTS.

b. EACH STATION SHALL BE CAPABLE OF OPERATING TWO (2) 7VA ELECTRIC VALVE-IN-HEAD SOLENOIDS.

c. THE STAND-ALONE CONTROLLER SHALL HAVE TWO (2) POSSIBLE PROGRAMS.

d. THE STAND-ALONE CONTROLLER SHALL PROVIDE GLOBAL PERCENTAGE INCREASE/DECREASE (WATER BUDGET) FOR ALL STATIONS SIMULTANEOUSLY, FROM TEN (10) TO TWO HUNDRED (200) PERCENT, IN TEN (10) PERCENT INCREMENTS.

e. ALL STATIONS SHALL BE ABLE TO BE TURNED ON/OFF MANUALLY BUY OPERATING TIMING MECHANISM OR BY MANUAL SWITCH AT STATION OUTPUT.

f. THE STAND-ALONE CONTROLLER SHALL INCORPORATE AN INTEGRAL MOV SURGE PROTECTION INTO THE TERMINAL BLOCK FOR EACH OF ITS 24 VAC FIELD WIRE OUTPUTS. CONTROLLER POWER INPUT WIRES WILL ALSO INCORPORATE SURGE PROTECTION.

g. THE CONTROL PANEL SHALL PROVIDE CONTINUOUS DISPLAY TIME. IT SHALL HAVE ALPHANUMERIC DISPLAYS OF DESCRIPTIVE ENGLISH MENUS AND LEGEND IDENTIFIERS WITH CURSOR SELECTION OF FUNCTION AND PRECISION VALUE ADJUSTMENT BY ROTARY DIAL INPUT.

h. THE STAND-ALONE CONTROLLER SHALL BE UL LISTED AND FCC APPROVED.

i. THE STAND-ALONE CONTROLLER SHALL HAVE 117 VAC, 60 HZ INPUT, 26.5 VAC, 60 HZ OUTPUT FOR OPERATING 24 VAC SOLENOIDS.

j. THE STAND-ALONE CONTROLLER CABINET SHALL BE A LOCKABLE AND WEATHER-RESISTANT OUTDOOR CABINET. MOUNT AS NOTED ON PLANS.

k. THE CONTROLLER SHALL BE EQUIPPED WITH LIGHTENING PROTECTION, BY THE CONTRACTOR, ON BOTH THE PRIMARY (120V) AND EACH SECONDARY (24V) CIRCUIT. THE CONTROLLER CIRCUITS SHALL BE GROUNDED TO A COPPER CLAD GROUNDING ROD LOCATED AT EACH CONTROLLER.

l. THE CONTROLLER SHALL BE EQUIPPED FOR A WATER CONSERVATION DEVICE. AS SPECIFIED.

PART III: EXECUTION

3.01 INSPECTION

A. THE CONTRACTOR SHALL EXAMINE THE AREAS AND CONDITIONS UNDER WHICH LANDSCAPE IRRIGATION SYSTEM IS TO BE INSTALLED AND NOTIFY THE LANDSCAPE ARCHITECT IN WRITING OF CONDITIONS DETRIMENTAL TO THE PROPER AND TIMELY COMPLETION OF THE WORK. THE CONTRACTOR SHALL PROCEED WITH THE WORK UNTIL UNSATISFACTORY CONDITIONS HAVE BEEN CORRECTED IN A MANNER ACCEPTABLE TO THE LANDSCAPE ARCHITECT.

3.02 PREPARATION

A. THE CONTRACTOR SHALL PROVIDE SLEEVES TO ACCOMMODATE PIPING UNDER WALKS OR PAVING. THE CONTRACTOR SHALL COORDINATE WITH OTHER TRADES AND INSTALL TO ACCURATE LEVELS PRIOR TO PAVING WORK. CUTTING AND PATCHING OF PAVING AND CONCRETE WILL NOT BE PERMITTED. THE CONTRACTOR SHALL MAINTAIN ALL WARNING SIGNS, SHORING, BARRICADES, FLARES AND RED LANTERNS, AS REQUIRED BY ANY LOCAL CODES, ORDINANCES OR PERMITS.

3.03 TRENCHING AND BACKFILLING

A. EXCAVATION: THE CONTRACTOR SHALL STAKE OUT THE LOCATION OF EACH RUN OF PIPE, SPRINKLER HEADS, SPRINKLER VALVES AND ISOLATION VALVES PRIOR TO TRENCHING. EXCAVATION SHALL BE OPEN VERTICAL CONSTRUCTION SUFFICIENTLY WIDE TO PROVIDE FREE WORKING SPACE AROUND THE WORK INSTALLED AND TO PROVIDE AMPLE SPACE OR BACKFILLING AND TAMPING. TRENCHES FOR PIPE SHALL BE CUT TO REQUIRED GRADE LINES, AND COMPACTED TO PROVIDE ACCURATE GRADE AND UNIFORM BEARING FOR THE FULL LENGTH OF THE LINE. THE BOTTOM OF THE TRENCHES SHALL BE FREE OF ROCK OR OTHER SHARP EDGED OBJECTS. MINIMUM COVER SHALL BE AS FOLLOWS:

PIPE AND WIRE DEPTH	
PRESSURE MAINLINE	18" AT TOP OF PIPE FROM FINISH
LATERAL PIPING (ROTOR)	12" AT TOP OF PIPE FROM
LATERAL PIPING (POP-UP)	12" AT TOP OF PIPE FROM
CONTROL WIRING	SIDE OF MAIN LINE

B. MINIMUM CLEARANCES: ALL PIPELINES SHALL HAVE A MINIMUM CLEARANCE OF SIX INCHES FROM EACH OTHER AND FROM LINES OF OTHER CRAFTS. PARALLEL LINES SHALL NOT BE INSTALLED DIRECTLY OVER ONE ANOTHER. NO LATERAL LINE SHALL BE INSTALLED IN THE MAIN-LINE TRENCH

3.04 INSTALLATION OF PIPING

A. PVC PIPE AND JOINTS: THE CONTRACTOR SHALL NOT INSTALL SOLVENT WILD PIPE WHEN AIR TEMPERATURE IS BELOW 40 INSTALLATION SHALL BE IN ACCORDANCE WITH THE MANUFACTURER'S INSTRUCTIONS.

1. ONLY THE SOLVENT RECOMMENDED BY THE PIPE MANUFACTURER SHALL BE USED. ALL PVC PIPE AND FITTINGS SHALL BE INSTALLED AS OUTLINED AND INSTRUCTED BY THE PIPE MANUFACTURER, AND IT SHALL BE THE CONTRACTOR'S FULL RESPONSIBILITY TO MAKE ARRANGEMENTS WITH THE PIPE MANUFACTURER FOR ANY FIELD ASSISTANCE THAT MAY BE NECESSARY. THE CONTRACTOR SHALL ASSUME FULL RESPONSIBILITY FOR THE CORRECT INSTALLATION.

3.05 BACKFILLING PROCEDURES

INITIAL BACKFILL ON PVC LINES SHALL BE PULVERIZED NATIVE SOIL, FREE OF FOREIGN MATTER. WITHIN RADIUS OF 4" OF THE PIPE SHALL BE CLEAN SOIL OR SAND. PLANT LOCATIONS SHALL TAKE PRECEDENCE OVER SPRINKLER AND PIPE LOCATIONS. THE CONTRACTOR SHALL COORDINATE THE LOCATION OF TREES AND SHRUBS WITH THE ROUTING OF LINES AND FINAL HEAD LOCATIONS.

A. BACKFILL AND COMPACTION: THE CONTRACTOR SHALL LEAVE TRENCHES SLIGHTLY MOUNDED TO ALLOW FOR SETTLEMENT AFTER THE BACKFILLING IS COMPLETED. THE CONTRACTOR SHALL CLEAN THE SITE OF THE WORK CONTINUOUSLY OF EXCESS WASTE MATERIALS AS THE BACKFILLING PROGRESSES, AND LEAVE IN A NEAT CONDITION. NO TRENCHES SHALL BE LEFT OPEN FOR A PERIOD OF MORE THAN 48 HOURS. PROTECT OPEN TRENCHES AS REQUIRED.

1. THE CONTRACTOR SHALL CAREFULLY BACKFILL EXCAVATED MATERIALS APPROVED FOR BACKFILLING, CONSISTING OF EARTH, LOAM, SAND, AND OTHER APPROVED MATERIALS, FREE OF ROCK AND DEBRIS OVER 1" IN SIZE. BACKFILL SHALL BE COMPACTED TO ORIGINAL DENSITY OF SURROUNDING SOIL WITHOUT DIPS, SUNKEN AREAS, OR IRREGULARITIES.

2. THE CONTRACTOR SHALL CONFORM TO TERRITORY REQUIREMENTS FOR METHODS AND REQUIRED COMPACTION PERCENTAGES, FOR ROADS AND PAVING.

3. THE CONTRACTOR SHALL HAND PLACE THE FIRST 6" OF BACKFILL (OR TO TOP OF PIPE) AND HAVE IT WALKED ON SO AS TO SECURE THE POSITION OF THE PIPE AND WIRE.

4. NO WHEEL ROLLING WILL BE ALLOWED. THE CONTRACTOR SHALL REMOVE ROCK OR DEBRIS EXTRACTED FROM BACKFILL MATERIALS AND DISPOSE OF OFFSITE. THE CONTRACTOR SHALL FILL ANY VOIDS LEFT IN BACKFILL WITH APPROVED BACKFILL MATERIALS.

B. EXISTING LAWNS: WHERE TRENCHING IS REQUIRED ACROSS EXISTING LAWNS, UNIFORMLY CUT STRIPS OF SOD 6" WIDER THAN TRENCH. THE CONTRACTOR SHALL REMOVE SOD IN ROLLS OF SUITABLE SIZE FOR HANDLING AND KEEP MOISTENED UNTIL REPLANTED. THE CONTRACTOR SHALL REPLANT SOD WITHIN 48 HOURS AFTER REMOVAL, ROLL AND WATER GENEROUSLY. THE CONTRACTOR SHALL RESOD ANY AREAS NOT IN HEALTHY CONDITION EQUAL TO ADJOINING LAWNS 10 DAYS AFTER REPLANTING.

C. PAVEMENTS: JACK AND BORE OR DIRECTIONAL BORE PIPING UNDER PAVING MATERIALS AS PER LOCAL REGULATORY CODES. NO CUTTING AND PATCHING OF PAVEMENT WILL BE PERMITTED.

3.06 VALVES

A. ISOLATION VALVES: SHALL BE SIZED CORRESPONDING TO ADJACENT PIPE SIZE. SPECIFIED VALVE BOXES SHALL BE INSTALLED FLUSH WITH FINISH GRADE IN SUCH A MANNER THAT SURFACE FORCES APPLIED TO THEIR EXPOSED AREA WILL NOT BE TRANSMITTED TO THE PIPING IN WHICH THE VALVE IS INSTALLED NOR ANY OTHER PIPING, WIRING OR OTHER LINES IN THE VICINITY OF SAID VALVES.

B. GATE VALVES: INSTALL WHERE SHOWN, IN VALVE BOXES.

C. ELECTRIC CONTROL VALVES: SHALL BE INSTALLED IN SPECIFIED VALVE BOXES. THE VALVE SHALL HAVE 6" OF 3/4" PEA GRAVEL INSTALLED BELOW THE BOTTOM OF THE VALVE. IF THE VALVE BOX DOES NOT EXTEND TO THE BASE OF THE VALVE, A VALVE BOX EXTENSION SHALL BE INSTALLED. ELECTRIC CONTROL VALVES SHALL BE INSTALLED WHERE SHOWN AND GROUPED TOGETHER WHERE PRACTICAL. THE CONTRACTOR SHALL PLACE NO CLOSER THAN 24" TO WALK EDGES, BIKEWAY EDGES, BUILDINGS AND WALLS. THE CONTRACTOR SHALL ADJUST THE VALVE TO PROVIDE FLOW RATE OR RATED OPERATING PRESSURE REQUIRED FOR EACH SPRINKLER CIRCUIT.

3.07 CONDUIT AND SLEEVES

A. CONDUIT AND SLEEVES FOR CONTROL WIRING AND MAIN/LATERAL PIPE: THE CONTRACTOR SHALL PROVIDE AND INSTALL WHERE NECESSARY. CONTRACTOR SHALL COORDINATE LOCATIONS OF PREVIOUSLY INSTALLED SLEEVING WITH THE GENERAL SITE CONTRACTOR.

1. THE CONTRACTOR SHALL COORDINATE INSTALLATION OF SLEEVES WITH WORK OF OTHER DISCIPLINES.

3.08 CONTROLS

A. THE CONTRACTOR SHALL CONNECT ELECTRIC CONTROL VALVES TO CONTROLLERS IN A CLOCKWISE SEQUENCE TO CORRESPOND WITH STATION SETTINGS BEGINNING WITH STATIONS 1, 2, 3, ETC. AUTOMATIC CONTROLLERS SHALL BE PROVIDED AND INSTALLED BY THE CONTRACTOR AS NOTED ON THE DRAWINGS. ALL ZONES WILL BE LABELED ON THE CONTROLLER.

B. CONTROLLERS SHALL BE EQUIPPED WITH LIGHTNING PROTECTION AND GROUNDED TO A STANDARD 5/8" COPPER CLAD STEEL GROUND ROD DRIVEN A MINIMUM OF 8' INTO THE GROUND AND CLAMPED.

C. THE ELECTRICAL SERVICE TO THE CONTROLLERS SHALL BE PERFORMED BY AN ELECTRICAL SUBCONTRACTOR IN COMPLIANCE WITH NEC REQUIREMENTS.

3.09 CONTROL WIRE

A. CONTROL WIRING BETWEEN THE CONTROLLER AND ELECTRIC VALVES SHALL BE BURIED IN MAIN LINE TRENCHES OR IN SEPARATE TRENCHES. ELECTRICAL CONNECTION AT VALVE WILL ALLOW FOR PIGTAIL SO SOLENOID CAN BE REMOVED FROM VALVE WITH SUFFICIENT SLACK TO ALLOW ENDS TO BE PULLED 12" ABOVE GROUND FOR EXAMINATION AND CLEANING.

B. AN EXPANSION LOOP SHALL BE PROVIDED AT EVERY VALVE AT 100' O.C. EXPANSION LOOP SHALL BE FORMED BY WRAPPING WIRE AT LEAST EIGHT TIMES AROUND A 3/4" PIPE AND WITHDRAWING PIPE.

C. THE WIRE SHALL BE BUNDLED AND TAPED EVERY TEN FEET. THE WIRE SHALL BE LAID IN THE TRENCH PRIOR TO INSTALLING THE PIPE BEING CAREFUL TO INSTALL WIRE BENEATH AND 6" TO THE SIDE OF THE MAIN PIPE LINE.

D. ELECTRICAL CONNECTIONS TO ELECTRIC CONTROL VALVES SHALL BE MADE WITH RAINBIRD PEN-TITE OR TECHDEL GT-3-GEL - TITE CONNECTORS OR EQUAL.

a. POWER CONNECTIONS: ELECTRICAL CONNECTIONS TO POWER AND SIGNAL WIRES SHALL BE MADE USING 3M 82-A2 POWER CABLE SPLICE KITS.

3.10 SPRINKLER HEADS

A. GENERAL PROVISIONS:

1. SPRINKLER HEADS SHALL BE INSTALLED AS DESIGNATED ON THE SHOP DRAWINGS. HEADS SHALL BE INSTALLED ON FLEXIBLE PVC. TOP TO BE FLUSH WITH FINISH GRADE OR TOP OF CURB.

2. SPACING OF HEADS SHALL NOT EXCEED THE MAXIMUM INDICATED ON THE SHOP DRAWINGS (UNLESS DIRECTED BY THE LANDSCAPE ARCHITECT). IN NO CASE SHALL THE SPACING EXCEED THE MAXIMUM RECOMMENDED BY THE MANUFACTURER.

B. HEAD TYPES:

1. POP-UP- ROTARY SPRINKLER HEADS: SHALL BE INSTALLED ON FLEX JOINT AND BE SET WITH TOP OF HEAD FLUSH WITH FINISH GRADE. HEADS INSTALLED AT CURB SHALL HAVE 6" TO 10" BETWEEN PERIMETER OF HEAD AND CONCRETE. HEADS PLACED AT EDGE OF PAVEMENT HAVING NO CURB SHALL BE INSTALLED 24" FROM EDGE OF PAVEMENT.

2. SPRAY POP-UP SPRINKLER HEADS: SHALL BE INSTALLED ON FLEXIBLE PVC AND BE SET WITH TOP OF HEAD FLUSH WITH FINISHED GRADE. SPRINKLER HEADS PLACED ADJACENT TO CURBS WILL BE INSTALLED 9" FROM CONCRETE. SPRINKLER HEADS PLACED ADJACENT TO PAVEMENT HAVING NO CURB SHALL BE INSTALLED 24" FROM THE EDGE OF PAVEMENT.

3.11 COMPLETION

A. FLUSHING: BEFORE SPRINKLER HEADS ARE SET, THE CONTRACTOR SHALL FLUSH THE LINES THOROUGHLY TO MAKE SURE THERE IS NO FOREIGN MATTER IN THE LINES.

1. THE CONTRACTOR SHALL FLUSH THE MAIN LINES FROM DEAD END FITTINGS FOR A MINIMUM OF FIVE MINUTES UNDER A FULL HEAD OF PRESSURE.

B. TESTING: THE CONTRACTOR SHALL NOTIFY LANDSCAPE ARCHITECT AND OWNER FORTY-EIGHT (48) HOURS IN ADVANCE OF TESTING.

1. PRIOR TO BACKFILLING OF MAIN LINE FITTINGS, CONTRACTOR SHALL FILL THE MAIN LINE PIPING WITH WATER, IN THE PRESENCE OF THE OWNER/LANDSCAPE ARCHITECT, TAKING CARE TO PURGE THE AIR FROM IT BY OPERATING ALL THE SPRINKLER CONTROL VALVES ONE OR MORE TIMES AND/OR SUCH OTHER MEANS AS MAY BE NECESSARY. A SMALL, HIGH PRESSURE PUMP OR OTHER MEANS OF MAINTAINING A CONTINUOUS WATER SUPPLY SHALL BE CONNECTED TO THE MAIN LINE AND SET SO AS TO MAINTAIN 100 PSI IN THE MAIN LINE SYSTEM FOR TWO (2) HOURS WITHOUT INTERRUPTION. WHEN THIS HAS BEEN ACCOMPLISHED AND WHILE THE PRESSURE IN THE SYSTEM IS STILL 100 PSI, LEAKAGE TESTING SHALL BE PERFORMED IN ACCORDANCE WITH AWWA STANDARD C-600. PRESSURE READINGS SHALL BE NOTED AND MAKE UP WATER USAGE SHALL BE RECORDED. SHOULD THE RATE OF MAKE UP WATER USAGE INDICATE SIGNIFICANT LEAKAGE, THE SOURCE OF SUCH LEAKAGE SHALL BE FOUND AND CORRECTED AND THE SYSTEM THEN RETESTED UNTIL THE OWNER/LANDSCAPE ARCHITECT IS SATISFIED THAT THE SYSTEM IS REASONABLY SOUND. LATERAL LINE TESTING SHALL BE CONDUCTED DURING THE OPERATING TESTING OF THE SYSTEM BY CHECKING VISUALLY THE GROUND SURFACE UNTIL NO LEAKS IN THIS PORTION OF THE SYSTEM ARE EVIDENT. LEAKS SHALL BE REPAIRED OR PAID FOR BY THE CONTRACTOR AT ANY TIME THEY APPEAR DURING THE WARRANTY PERIOD.

2. ADJUSTMENT AND COVERAGE OF SYSTEM: COORDINATE PRESSURE TESTING WITH ADJUSTMENTS AND COVERAGE TEST OF SYSTEM SO BOTH MAY OCCUR AT THE SAME TIME. THE CONTRACTOR SHALL BALANCE AND ADJUST THE VARIOUS COMPONENTS OF THE SYSTEM SO THAT THE OVERALL OPERATION OF THE SYSTEM IS MOST EFFICIENT. THIS INCLUDES A SYNCHRONIZATION OF THE CONTROLLERS, ADJUSTMENTS TO PRESSURE REGULATORS, PRESSURE RELIEF VALVES, PART CIRCLE SPRINKLER HEADS, AND INDIVIDUAL STATION ADJUSTMENTS ON THE CONTROLLERS.

CONSTRUCTION DOCUMENTS

No.	REVISIONS	DATE	BY

Kimley»Horn

PROFESSIONAL ENGINEER
GEORGE BALABAN, P.E
0-51817-1B
U.S. VIRGIN ISLANDS
04/09/2026

KHA PROJECT 045826000
DATE JUNE 2026
SCALE AS SHOWN
DESIGNED BY KD/GP
DRAWN BY KD
CHECKED BY GP

IRRIGATION NOTES AND DETAILS

LBJ PUMP STATION
PREPARED FOR
VIWMA

SHEET NUMBER
IR-03

Plotted By: Davis, Krystof Sheet Set: FEC Layout: Irrigation Details June 24, 2026 01:15:30pm K:\FTL_Civil\045 Jobs\045826000 LBJ Pump Station\Landscape\CADD\PlanSheets\LANDSCAPE AND IRRIGATION NOTES AND DETAILS.dwg
This document, together with the concepts and designs presented herein, as an instrument of service, is intended only for the specific purpose and client for which it was prepared. Reuse of and improper reliance on this document without written authorization and adaptation by Kimley-Horn and Associates, Inc. shall be without liability to Kimley-Horn and Associates, Inc.

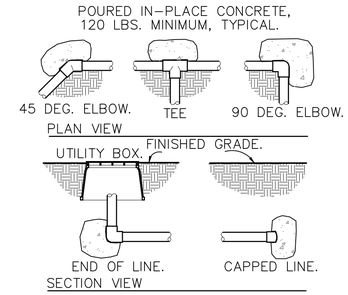

1 THRUST BLOCKING
3/4" = 1'-0"

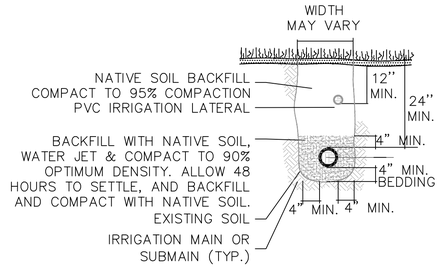

2 TRENCHING DETAIL
NOT TO SCALE

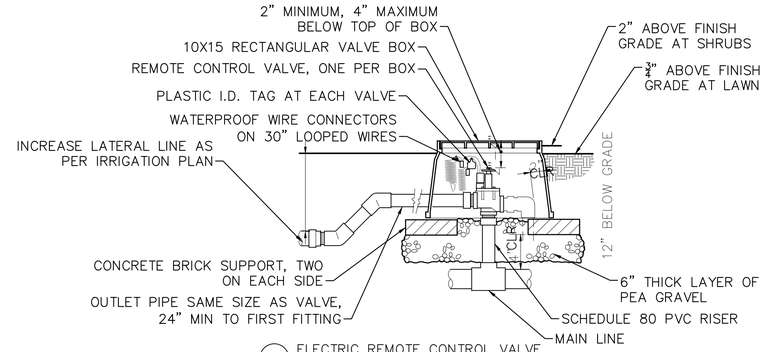

3 ELECTRIC REMOTE CONTROL VALVE
1 1/2" = 1'-0"

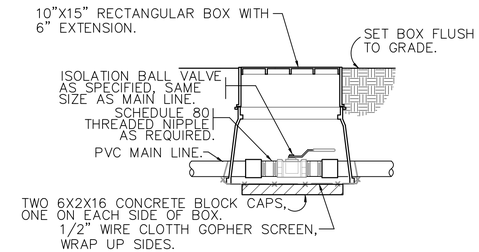

4 BRASS BALL ISOLATION VALVE
1 1/2" = 1'-0"

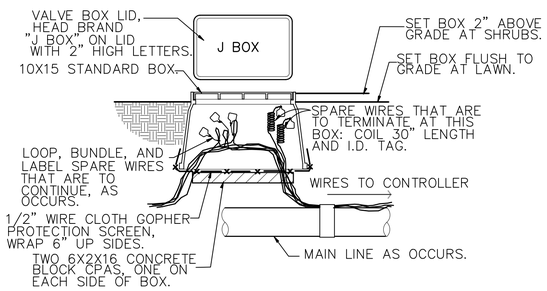

5 WIRE BUNDLE JUNCTION BOX
1 1/2" = 1'-0"

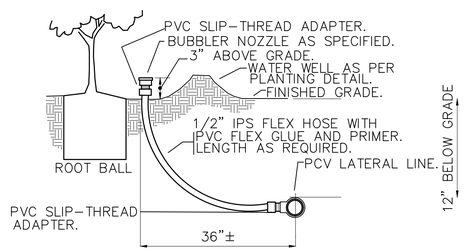

6 BUBBLER ON FLEX HOSE RISER
3" = 1'-0"

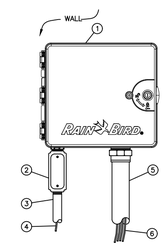

1 IRRIGATION CONTROLLER:
RAIN BIRD ESP-LXME CONTROLLER IN PLASTIC CABINET WITH WALL MOUNT. INSTALL CONTROLLER AND CABINET ON WALL PER MANUFACTURER'S RECOMMENDATIONS.

2 JUNCTION BOX

3 1-INCH CONDUIT AND FITTINGS TO POWER SUPPLY

4 POWER SUPPLY WIRE

5 2-INCH CONDUIT AND FITTINGS FOR STATION WIRES

6 WIRES TO REMOTE CONTROL VALVES

NOTES:
1. ESP-LXMEF CONTROLLER IS AVAILABLE IN 8- OR 12-STATION BASE MODELS. ADDITIONAL MODULES IN 4-, 8- AND 12-STATION VERSIONS MAY BE ADDED TO BRING THE CONTROLLER UP TO 48 STATIONS MAXIMUM.
2. FOR EASE OF INSTALLATION INTO A CONTROLLER WITH MORE THAN 24 STATIONS, INSTALL A JUNCTION BOX AT THE BASE OF CONTROLLER AND TRANSITION LARGER VALVE AND COMMON WIRES FROM FIELD TO 18 AWG MULTI CONDUCTOR WIRE TO BE USED IN CONTROLLER.
3. USE STEEL CONDUIT FOR ABOVE GRADE AND SCH 40 PVC CONDUIT FOR BELOW GRADE CONDITIONS.
4. PROVIDE PROPER GROUNDING COMPONENTS TO ACHIEVE GROUND RESISTANCE OF 10 OHMS OR LESS.

7 ESP-LXMEF CONTROLLER IN PLASTIC CABINET
NOT TO SCALE

WARRANTY NOTES:

A. THE CONTRACTOR SHALL FULLY WARRANT THE LANDSCAPE IRRIGATION SYSTEM FOR A PERIOD OF ONE (1) YEAR AFTER THE WRITTEN FINAL ACCEPTANCE AND WILL RECEIVE A WRITTEN CONFIRMATION FROM THE LANDSCAPE ARCHITECT THAT THE WARRANTY PERIOD IS IN EFFECT.

B. DURING THE WARRANTY PERIOD, THE CONTRACTOR WILL ENFORCE ALL MANUFACTURER'S AND SUPPLIER'S WARRANTIES AS IF MADE BY THE CONTRACTOR HIMSELF. ANY MALFUNCTIONS, DEFICIENCIES, BREAKS, DAMAGES, DISREPAIR, OR OTHER DISORDER DUE TO MATERIALS, WORKMANSHIP, OR INSTALLATION BY THE CONTRACTOR AND HIS SUPPLIERS SHALL BE IMMEDIATELY AND PROPERLY CORRECTED TO THE PROPER ORDER AS DIRECTED BY THE OWNER AND/OR LANDSCAPE ARCHITECT.

C. ANY DAMAGES CAUSED BY SYSTEM MALFUNCTION SHALL BE THE RESPONSIBILITY OF THE CONTRACTOR WHO SHALL MAKE FULL AND IMMEDIATE RESTORATION FOR SAID DAMAGES.

CONSTRUCTION DOCUMENTS

No.	REVISIONS	DATE	BY

Kimley»Horn

Sign of Quality

PROFESSIONAL ENGINEER
GEORGE BALABAN, P.E
0-51817-1B
U.S. VIRGIN ISLANDS
07/09/2026

KHA PROJECT 045826000
DATE JUNE 2026
SCALE AS SHOWN
DESIGNED BY KD/GP
DRAWN BY KD
CHECKED BY GP

IRRIGATION DETAILS

LBJ PUMP STATION
PREPARED FOR
VIWMA

SHEET NUMBER
IR-04

Plotted By:Davis, Kryztof Sheet Set:FEC Layout:IR-04 IRRIGATION DETAILS June 24, 2026 01:15:40pm K:\FTL_Civil\045 Jobs\045826000 LBJ Pump Station\Design\CADD\PlanSheets\IR-04 IRRIGATION DETAILS.dwg
This document, together with the concepts and designs presented herein, as an instrument of service, is intended only for the specific purpose and client for which it was prepared. Reuse of and improper reliance on this document without written authorization and adaptation by Kimley-Horn and Associates, Inc. shall be without liability to Kimley-Horn and Associates, Inc.

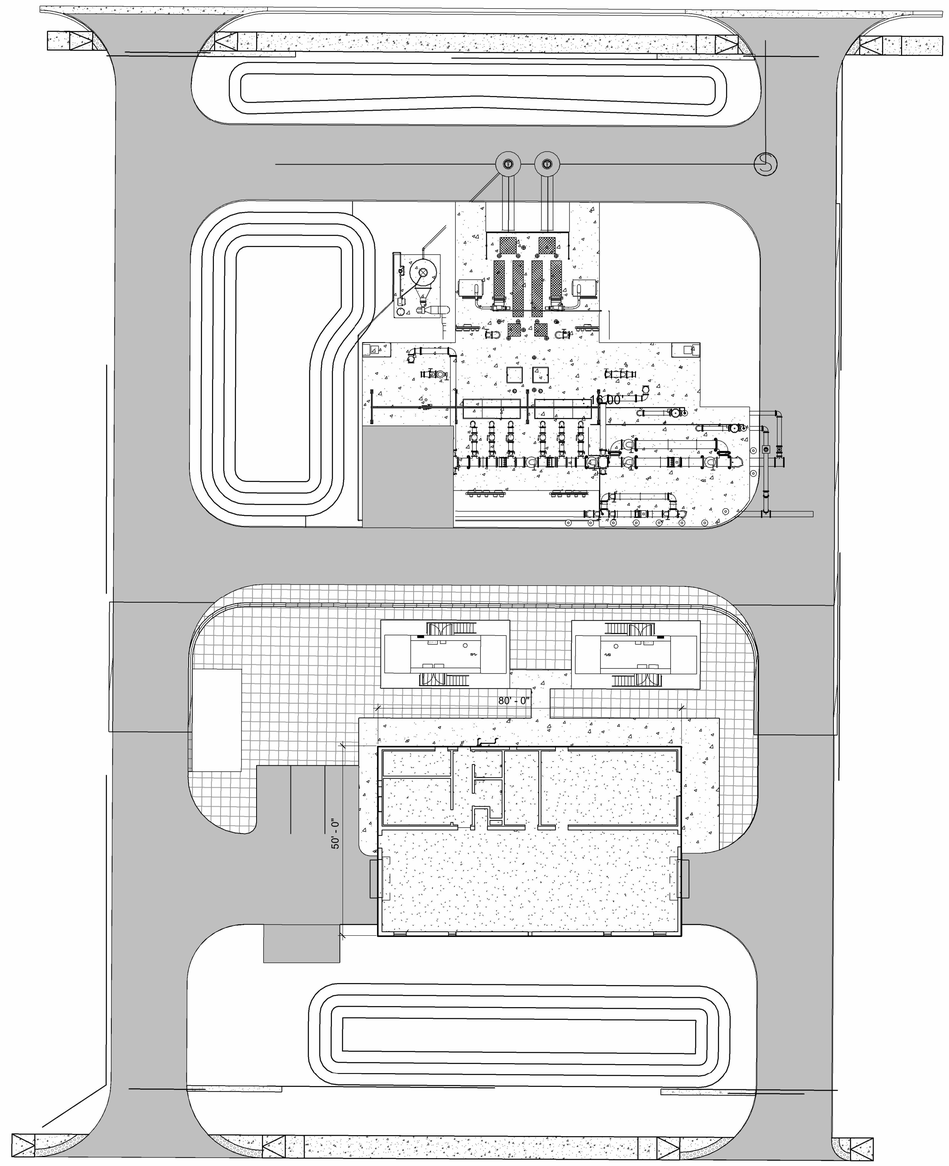

SITE PLAN
ARCHITECTURAL SITE PLAN

1" = 20'-0"

0 5' 10' 20' 40'

CONSTRUCTION DOCUMENTS

NO.	DESCRIPTION	DATE	BY

Kimley»Horn

EDT Sign of Quality

REGISTERED ARCHITECT
JENNIFER THORINGTON-HINES
2027-A
U.S. VIRGIN ISLANDS

KHA PROJECT 04582600
DATE JUNE 2026
SCALE: 1" = 20'-0"
DESIGNED BY:MB
DRAWN BY:ZZ
CHECKED BY:JTH

SITE PLAN

LBJ PUMP STATION
PREPARED FOR
VIWMA

SHEET NUMBER
A-01

This document, together with the concepts and designs presented herein, as an instrument of service, is intended only for the specific purpose and client for which it was prepared. Reuse of and improper reliance on this document without written authorization and adaptation by Kimley-Horn and Associates, Inc. shall be without liability to Kimley-Horn and Associates, Inc.

APPLICABLE CODES & REGULATIONS:

THE PROJECT SHALL COMPLY WITH CODES, ORDINANCES, OR LAWS HAVING JURISDICTION ON THE PROJECT, WHICH INCLUDE, BUT ARE NOT LIMITED TO:

ZONING & PLANNING

BUILDING CODE	INTERNATIONAL BUILDING CODE 2021 EDITION
FIRE PREVENTION CODE	INTERNATIONAL FIRE CODE 2021 EDITION
PLUMBING CODE	INTERNATIONAL PLUMBING CODE 2021 EDITION
GAS CODE	INTERNATIONAL FUEL GAS CODE 2021 EDITION
MECHANICAL CODE	INTERNATIONAL MECHANICAL CODE 2021 EDITION
ELECTRICAL CODE	NATIONAL ELECTRICAL CODE 2020 EDITION
ACCESSIBILITY CODE	NFPA 101 - 2018

LIFE SAFETY LEGEND

MAX. TRAVEL DISTANCE (FT)	MAXIMUM EXIT TRAVEL DISTANCE (LONGEST ROUTE ONLY PER FLOOR SHOWN)
CLEAR WIDTH / MAX. EXIT CAPACITY	MAX EXIT CAPACITY
FEC	FIRE EXTINGUISHER CABINET
	EXIT LIGHT - SEE ELECTRICAL PLANS
	TWO HOUR FIRE BARRIER

PROJECT INFORMATION:

BUILDING USAGE:

CONSTRUCTION TYPE:	VB
OCCUPANCY TYPE:	S-1
FULLY SPRINKLERED:	No
NUMBER OF FLOORS:	1
TOTAL FLOOR AREA:	4000 SF
OCCUPANT LOAD:	27

TABLE 307.1
MAXIMUM STORAGE OF TYPE "IB" FLAMMABLE LIQUID AND TYPE "II" COMBUSTABLE LIQUID IS 120 GALLONS.

TABLE 504.3 ALLOWABLE BUILDING HEIGHT S1 TYPE VB - 40FT

TABLE 506.2 ALLOWABLE AREA (NOT SPRINKLERED) S1 TYPE VB - 9000 SF

THE PROPOSED BUILDING IS 4000 SF, WHICH IS LESS THAN THE MAX TABULAR VALUE

RM NO	NAME	OCCUPANCY CLASSIFICATION	GROUP	RM AREA	O/SF	LOAD	MIN REQD EXITS
100	STORAGE ROOM	ACCESSORY STORAGE AREAS	S	2096 SF	300	7	1
101	EQUIPMENT ROOM	ACCESSORY STORAGE AREAS	S	697 SF	300	3	1
102	TOOL STORAGE	ACCESSORY STORAGE AREAS	S	177 SF	300	1	1
103	JAN	(none)		16 SF			
104	HALLWAY	(none)		102 SF			
105	RESTROOM	(none)		60 SF			
106	RESTROOM	(none)		51 SF			
107	OPEN OFFICE	ASSEMBLY UNCONCENTRATED	A	218 SF	15	15	1
108	WATER SYSTEM MECH ROOM	ACCESSORY STORAGE AREAS	S	119 SF	300	1	1

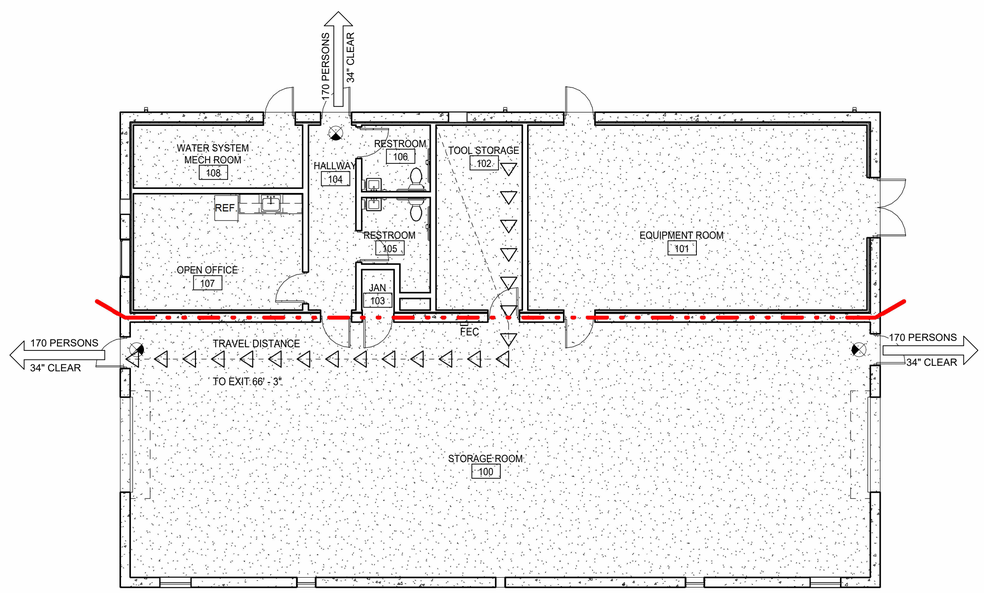

FLOOR PLAN
LIFE SAFETY FLOOR PLAN

1/8" = 1'-0"

0 2' 4' 8' 16'

CONSTRUCTION DOCUMENTS

NO.	DESCRIPTION	DATE	BY

Kimley»Horn

REGISTERED ARCHITECT
JENNIFER THORINGTON-HINES
2027-A
U.S. VIRGIN ISLANDS

KHA PROJECT 045826000
DATE JUNE 2026
SCALE: 1/8" = 1'-0"
DESIGNED BY:MB
DRAWN BY:ZZ
CHECKED BY:JTH

LIFE SAFETY FLOOR PLAN

LBJ PUMP STATION PREPARED FOR VIWMA

SHEET NUMBER
A-02

This document, together with the concepts and designs presented herein, as an instrument of service, is intended only for the specific purpose and client for which it was prepared. Reuse of and improper reliance on this document without written authorization and adaptation by Kimley-Horn and Associates, Inc. shall be without liability to Kimley-Horn and Associates, Inc.

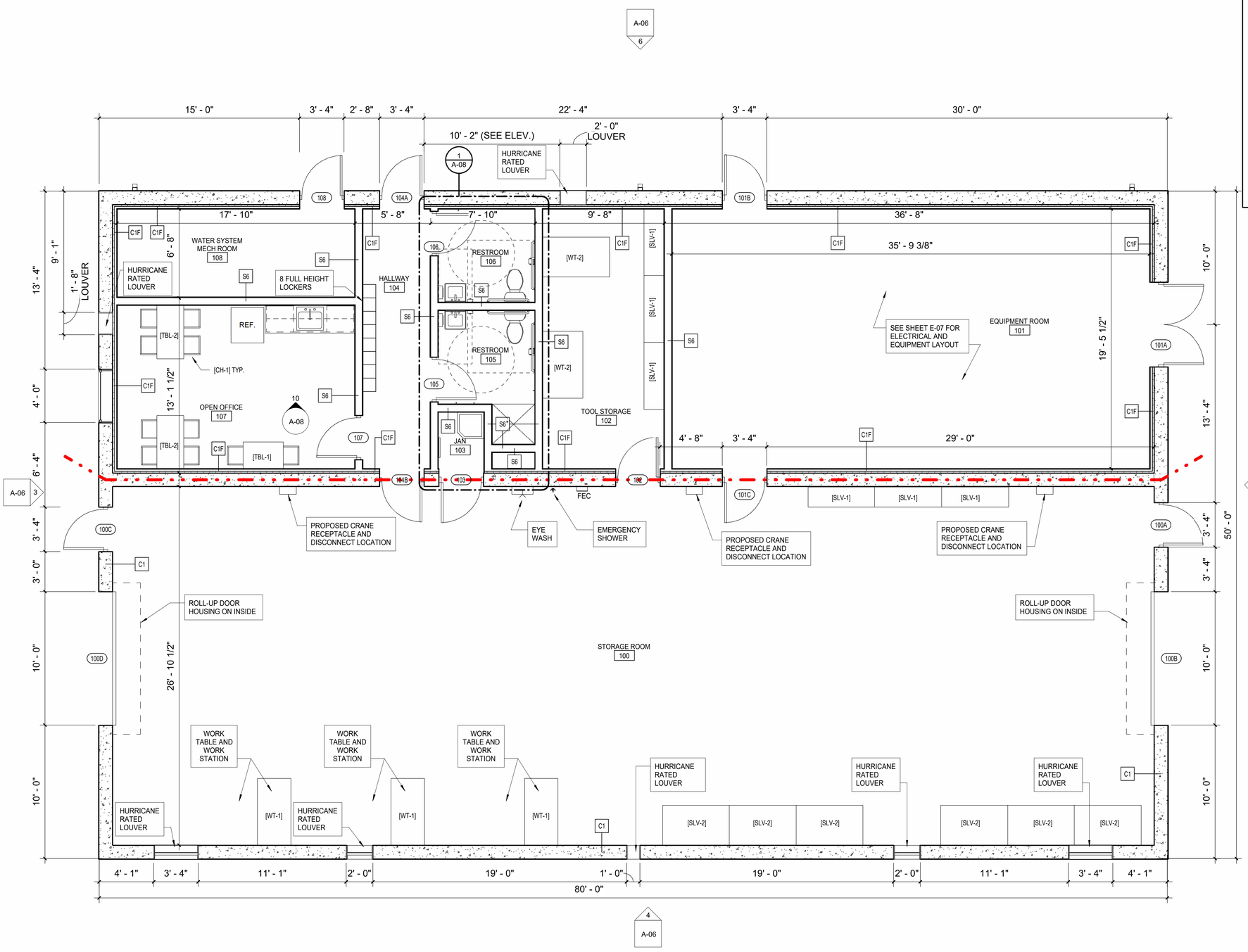

FLOOR PLAN
FIRST FLOOR PLAN

1/4" = 1'-0"

0 1' 2' 4' 8'

GENERAL NOTES:

1. GENERAL NOTES APPLY TO ALL DRAWINGS.
2. ALL DIMENSIONS ARE APPROXIMATE AND TO BE VERIFIED IN FIELD BY GENERAL CONTRACTOR.
3. PROVIDE BLOCKING FOR WALL MOUNTED ACCESSORIES AND COMPONENTS PER MANUFACTURERS REQUIREMENTS INCLUDING BUT NOT LIMITED TO HANDRAILS, CABINETRY, TOILET ACCESSORIES, ETC. COORDINATE WITH MOUNTING REQUIREMENTS.
4. SEAL ALL PENETRATIONS THROUGH FIRE/SMOKE BARRIERS AND FIRE WALLS WITH APPROVED UL FIRE STOP.
5. REFER TO A-01 FOR THE CAMPUS CONFIGURATION OF THE LOCATION OF PUMP STATIONS BUILDING WITHIN THIS PROJECT SCOPE.
6. REFRIGERATOR IS NOT IN CONTRACT.
7. AT SHOWER ENCLOSURE WALLS [S6*] - USE 5/8" CEMENT BACKER BOARD IN LIEU OF M.R. GYP BD.

FURNITURE: BASIS OF DESIGN

[SLV-1]
4 SHELF EXTRA HEAVY DUTY STEEL SHELVING 60" WIDE 18" DEEP, 72" TALL
BY GLOBAL INDUSTRIAL, MODEL # WB236609

[SLV-2]
5 SHELF HIGH CAPACITY BOLTLESS STEEL SHELVING. 60" WIDE 36" DEEP, 72" TALL
BY GLOBAL INDUSTRIAL, MODEL # WB272131

[WT-1]
WORKBENCH WITH STAINLESS STEEL TOP
60" WIDE 30" DEEP, 30-36" TALL
BY PRO-LINE, MODEL # WBB3252462

[WT-2]
WORKBENCH WITH STAINLESS STEEL TOP
60" WIDE 36" DEEP, 30-36" TALL
BY PRO-LINE, MODEL # WBB3252465

[TBL-1]
TABLE 36" WIDE 24" DEEP,
BY KORE, TOP MODEL # 25K2436RT, TFL WITH VINYL RIM
FRAME MODEL # 25K243628SEF, SQ LEGS

[TBL-2]
TABLE 48" WIDE 24" DEEP,
BY KORE, TOP MODEL # 25K2448RT, TFL WITH VINYL RIM
FRAME MODEL # 25K244828SEF, SQ LEGS

[CH-1]
PLASTIC ARMLESS CHAIR WITH CLEAR GLIDES
SHELL AND FRAME COLOR BLACK
BY LUMIN, WIRE ROD

NO.	DESCRIPTION	DATE	BY

Kimley»Horn
Sign of Quality

REGISTERED ARCHITECT
JENNIFER THORINGTON-HINES
2027-A
VIRGIN ISLANDS

KHA PROJECT 045826000
DATE JUNE 2026
SCALE: 1/4" = 1'-0"
DESIGNED BY:MB
DRAWN BY:ZZ
CHECKED BY:JTH

FLOOR PLAN

LBJ PUMP STATION PREPARED FOR VIWMA

CONSTRUCTION DOCUMENTS

SHEET NUMBER
A-03

This document, together with the concepts and designs presented herein, as an instrument of service, is intended only for the specific purpose and client for which it was prepared. Reuse of and improper reliance on this document without written authorization and adaptation by Kimley-Horn and Associates, Inc. shall be without liability to Kimley-Horn and Associates, Inc.

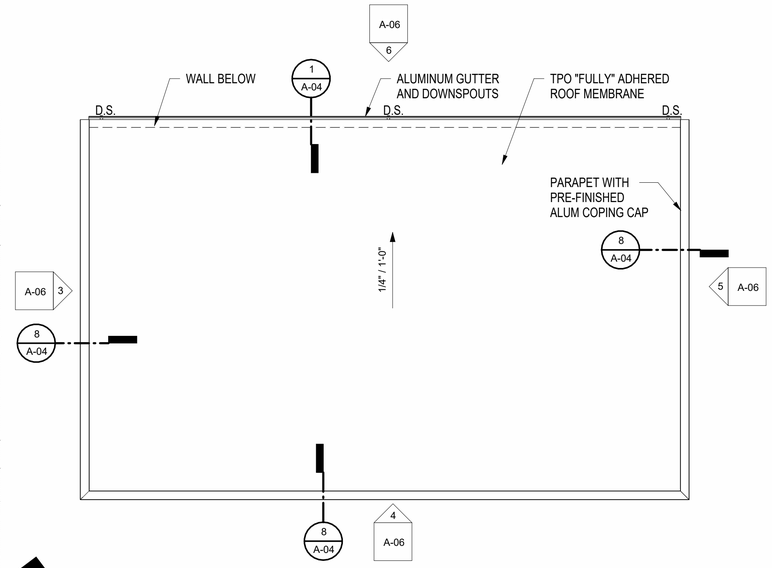

PLAN
ROOF PLAN

1" = 10'-0"

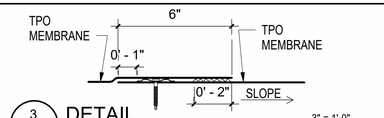

3 / A-04 DETAIL
LAP SPLICE

3" = 1'-0"

NOTE:
WHEN POLYESTER REINFORCEMENT OF TPO IS EXPOSED, APPLY CUT EDGE OR GP SEALANT TO ENTIRE EXPOSED EDGE.

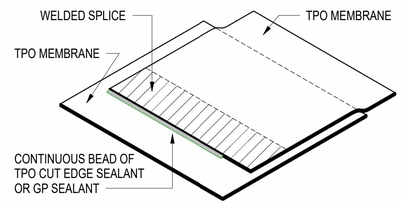

4 / A-04 DETAIL
CUT EDGE APPLICATION

1 1/2" = 1'-0"

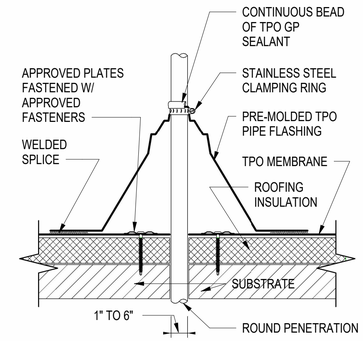

5 / A-04 DETAIL
UNIVERSAL PIPE FLASHING AT TPO

1 1/2" = 1'-0"

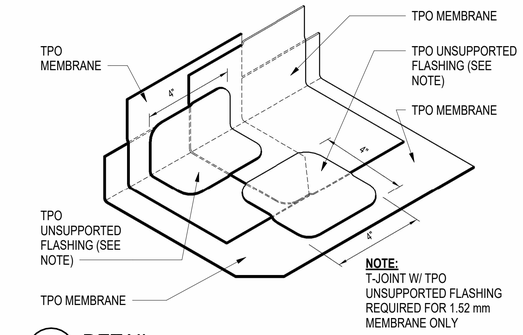

NOTE:
T-JOINT W/ TPO UNSUPPORTED FLASHING REQUIRED FOR 1.52 mm MEMBRANE ONLY

7 / A-04 DETAIL
LAP SPLICE @ CURB OR WALL FLASHING

1 1/2" = 1'-0"

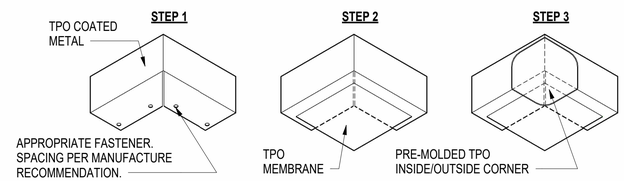

6 / A-04 DETAIL
INSIDE CORNER TPO COATED MTL.

1" = 1'-0"

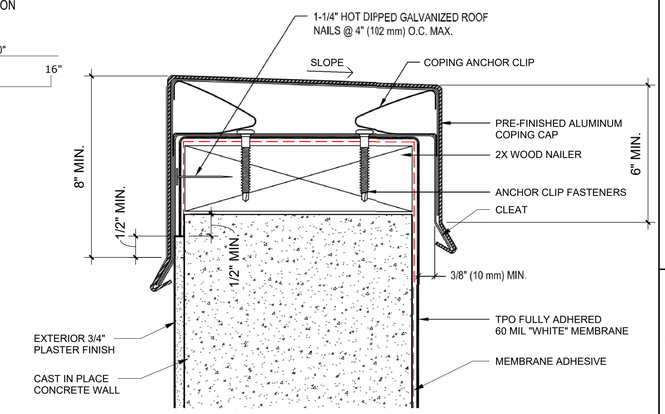

8 / A-04 DETAIL
TYPICAL DETAIL AT PARAPET COPING CAP

3" = 1'-0"

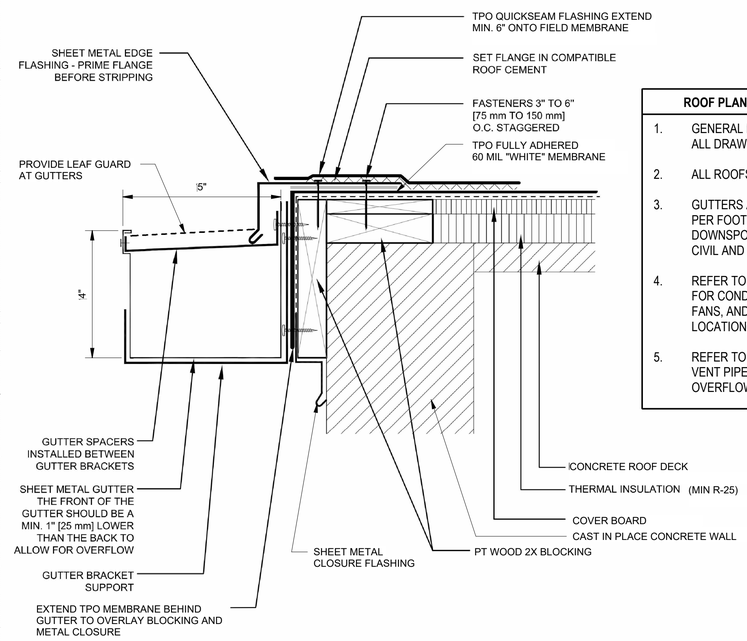

ROOF PLAN GENERAL NOTES:

1. GENERAL NOTES APPLY TO ALL DRAWINGS
2. ALL ROOFS TO BE TPO U.N.O.
3. GUTTERS ARE SLOPPED AT 1/8" PER FOOT U.N.O. COORDINATE DOWNSPOUT LOCATIONS WITH CIVIL AND LANDSCAPE.
4. REFER TO MECHANICAL PLANS FOR CONDENSER UNITS, EXHAUST FANS, AND MECHANICAL LOUVER LOCATIONS
5. REFER TO PLUMBING PLANS FOR VENT PIPE, GAS FLUES AND OVERFLOW NOZZLE LOCATIONS.

NOTES:
1. GUTTER BRACKETS ARE TO BE AT LEAST ONE GAUGE HEAVIER THAN GUTTER STOCK.
2. REFER TO THE SHEET METAL SECTION OF THE METAL ROOFING MANUAL FOR JOINERY AND SECUREMENT OPTIONS FOR SHEET METAL.
   A. EDGE DETAIL TO MEET ANSI / SPRI / FM4435 ES-1 WIND DESIGN STANDARD.
3. 4x5 ALUMINUM BOX GUTTER WITH 3X4 ALUMINUM DOWNSPOUTS.

1 / A-04 DETAIL
TYPICAL SECTION AT GUTTER / ROOF EAVE

12" = 1'-0"

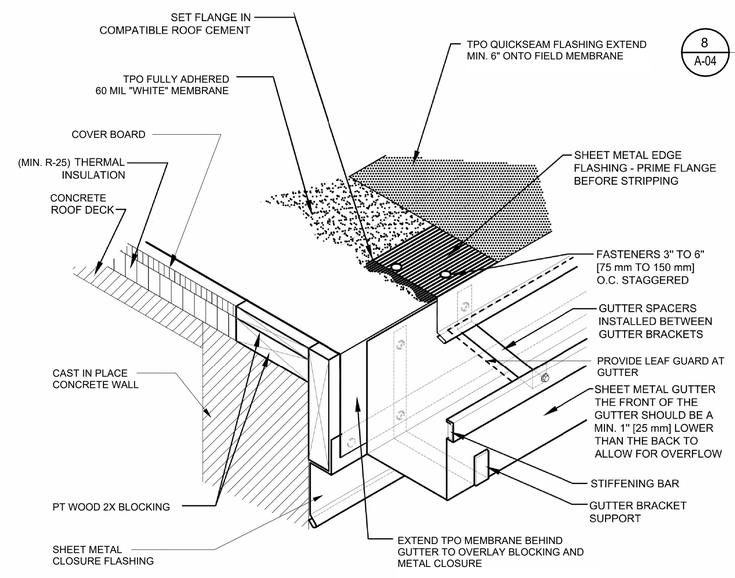

NOTES:
1. GUTTER BRACKETS ARE TO BE AT LEAST ONE GAUGE HEAVIER THAN GUTTER STOCK.
2. REFER TO THE SHEET METAL SECTION OF THE METAL ROOFING MANUAL FOR JOINERY AND SECUREMENT OPTIONS FOR SHEET METAL.
   A. EDGE DETAIL TO MEET ANSI / SPRI / FM4435 ES-1 WIND DESIGN STANDARD.
3. 4x5 ALUMINUM BOX GUTTER WITH 3X4 ALUMINUM DOWNSPOUTS.

2 / A-04 DETAIL
TYPICAL DETAIL AT GUTTER / ROOF EAVE

12" = 1'-0"

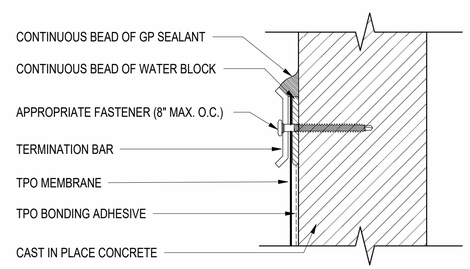

9 / A-04 DETAIL
TERMINATION BAR

3" = 1'-0"

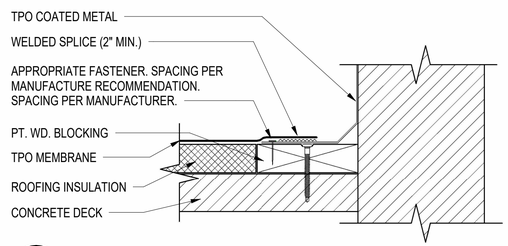

10 / A-04 DETAIL
BASE TIE-IN WITH COATED METAL

3" = 1'-0"

CONSTRUCTION DOCUMENTS

NO.	DESCRIPTION	DATE	BY

Kimley»Horn
EDT Sign of Quality

REGISTERED ARCHITECT
JENNIFER THORINGTON-HINES
2027-A
U.S. VIRGIN ISLANDS

KHA PROJECT 045826000
DATE JUNE 2026
SCALE As indicated
DESIGNED BY MB
DRAWN BY ZZ
CHECKED BY JTH

ROOF PLAN

LBJ PUMP STATION PREPARED FOR VIWMA

SHEET NUMBER
A-04

This document, together with the concepts and designs presented herein, as an instrument of service, is intended only for the specific purpose and client for which it was prepared. Reuse of and improper reliance on this document without written authorization and adaptation by Kimley-Horn and Associates, Inc. shall be without liability to Kimley-Horn and Associates, Inc.

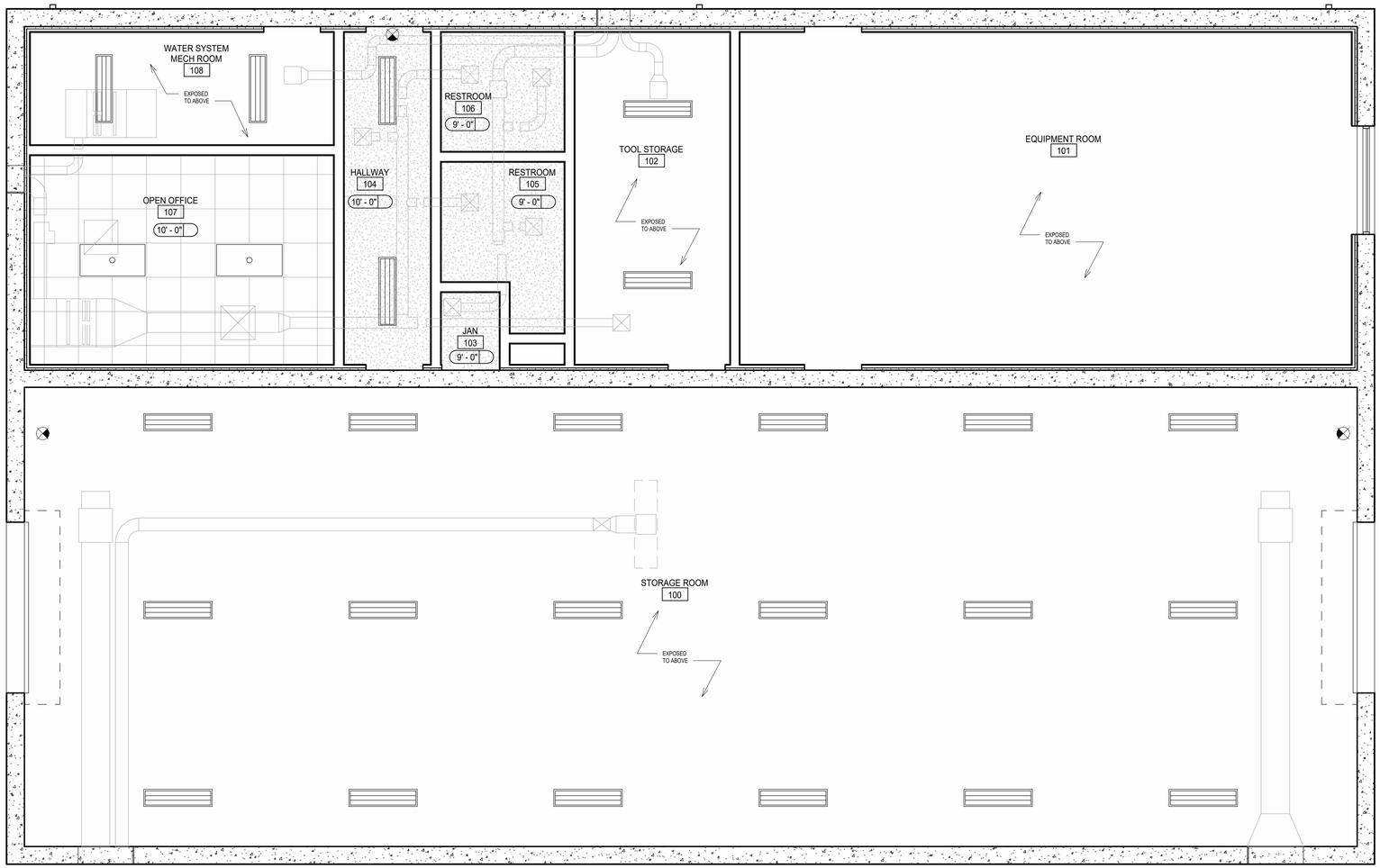

PLAN
FIRST FLOOR REFLECTED CEILING PLAN

1/4" = 1'-0"

0 1' 2' 4' 8'

CEILING PLAN GENERAL NOTES

1. CEILING PLAN IS FOR REFERENCE ONLY. REFER TO ENGINEERING DRAWINGS FOR ADDITIONAL REQUIREMENTS.
2. FIXTURES SHOWN FOR LOCATION ONLY.
3. CENTER CEILING GRID IN CENTER OF ROOM UNLESS OTHERWISE NOTED.
4. LIGHT FIXTURE, MECH DIFFUSERS & GRILLES IN CEILING TILES TO BE CENTERED IN CEILING TILES UNLESS OTHERWISE NOTED.
5. ALL SUSPENDED CEILINGS ARE 10'-0" A.F.F. UNLESS OTHERWISE NOTED.

CEILING PLAN LEGEND

	2 X 2 TEGULAR CEILING TILE W/ GRID. WHEN NECESSARY CUT 2' X 2' TEGULAR CEILING TILE IN ORDER TO AVOID SLIVERS OF LESS THATN 6".
	SUSPENDED, PAINTED M. R. GYP BD. CEILING.
	2 X 4 LAY IN LIGHTING FIXTURE, SEE ELECTRICAL DRAWINGS
	1x4 HUNG LIGHTING FIXTURE
	RECESSED CAN FIXTURE, SEE ELECTRICAL DRAWINGS
	EXIT LIGHT. SEE ELECTRICAL DRAWINGS
	EXHAUST FAN, SEE MECHANICAL DRAWINGS
	DIFFUSERS, SEE MECHANICAL DRAWINGS
	RETURN AIR GRILLE, SEE MECHANICAL DRAWINGS

NO.	DESCRIPTION	DATE	BY

Kimley»Horn
Sign of Quality

REGISTERED ARCHITECT
JENNIFER THORINGTON-HINES
2027-A
U.S. VIRGIN ISLANDS

K-HA PROJECT 045826000
DATE JUNE 2026
SCALE: as indicated
DESIGNED BY: MB
DRAWN BY: ZZ
CHECKED BY: JTH

FIRST FLOOR REFLECTED CEILING PLAN

LBJ PUMP STATION PREPARED FOR VIWMA

CONSTRUCTION DOCUMENTS

SHEET NUMBER
A-05

This document, together with the concepts and designs presented herein, as an instrument of service, is intended only for the specific purpose and client for which it was prepared. Reuse of and improper reliance on this document without written authorization and adaptation by Kimley-Horn and Associates, Inc. shall be without liability to Kimley-Horn and Associates, Inc.

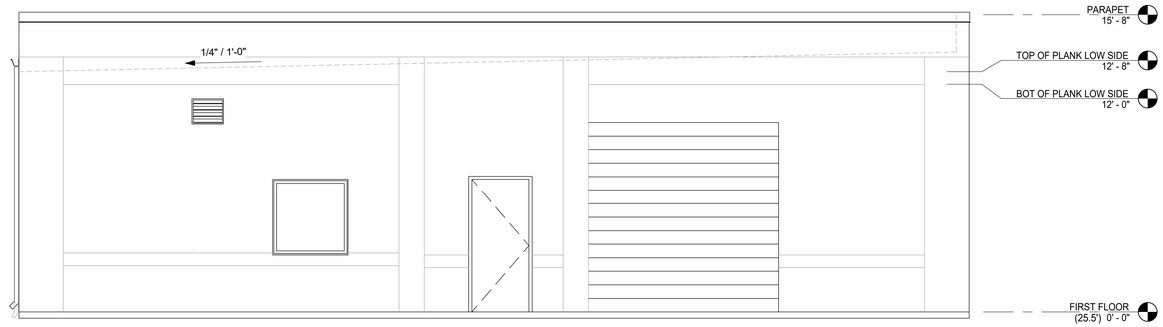

ELEVATION
WEST ELEVTION
1/4" = 1'-0"

ELEVATION
SOUTH ELEVATION
1/4" = 1'-0"

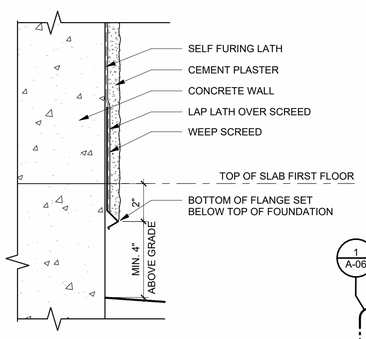

1 / A-06 DETAIL
STUCCO BASE DETAIL
3" = 1'-0"

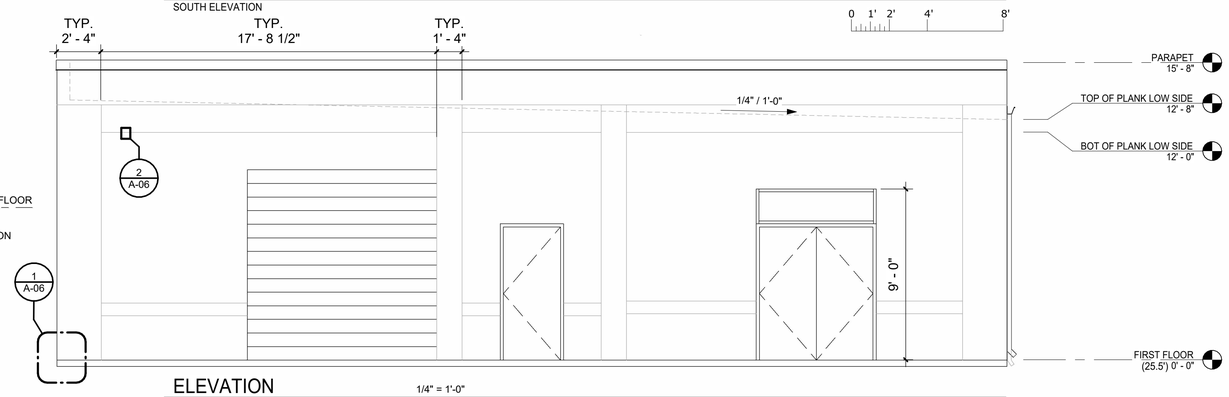

ELEVATION
EAST ELEVTION
1/4" = 1'-0"

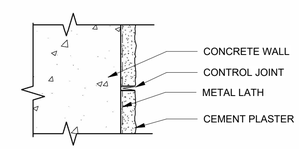

2 / A-06 DETAIL
STUCCO CONTROL JOINT
3" = 1'-0"

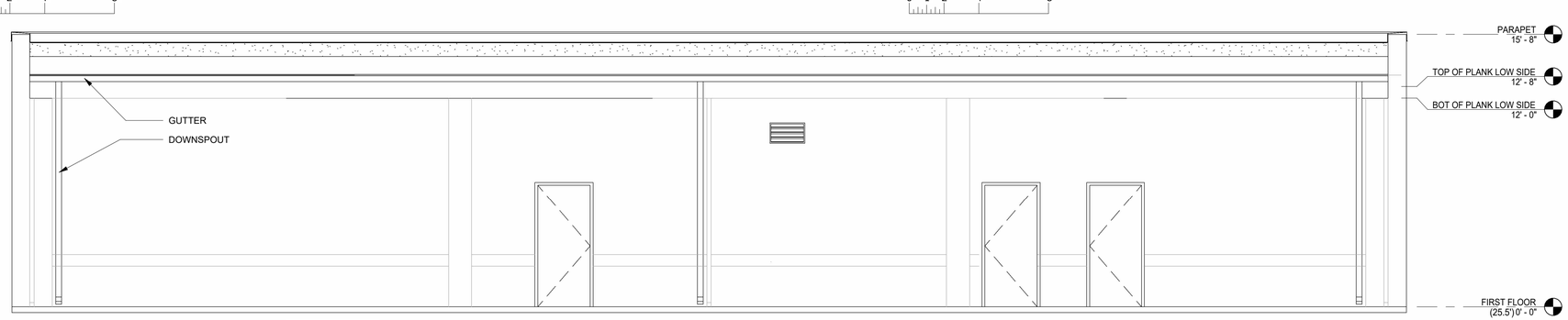

ELEVATION
NORTH ELEVATION
1/4" = 1'-0"

CONSTRUCTION DOCUMENTS

NO.	DESCRIPTION	DATE	BY

Kimley»Horn
Sign of Quality

REGISTERED ARCHITECT
JENNIFER THORINGTON-HINES
2027-A
U.S. VIRGIN ISLANDS

K-H PROJECT 045826000
DATE JUNE 2026
SCALE as indicated
DESIGNED BY MB
DRAWN BY ZZ
CHECKED BY JTH

EXTERIOR BUILDING ELEVATIONS

LBJ PUMP STATION PREPARED FOR VIWMA

SHEET NUMBER
A-06

This document, together with the concepts and designs presented herein, as an instrument of service, is intended only for the specific purpose and client for which it was prepared. Reuse of and improper reliance on this document without written authorization and adaptation by Kimley-Horn and Associates, Inc. shall be without liability to Kimley-Horn and Associates, Inc.

FINISH LEGEND

TAG	MATERIAL	MANUFACTURER	STYLE & COLOR
ACT-1	ACOUSTICAL CEILING TILES	ARMSTRONG	CALLA; SQUARE LAY-IN, 24"X24", WHITE (WH) OR SIMILAR
CT-1	CERAMIC WALL TILE	AMERICAN OLEAN	COLOR STORY WALL GLAZED CERAMIC: TRANQUILITY 0059 4"X12"
EPT-1	EPOXY PAINT	SHERWIN-WILLIAMS	SW 9166 "DRIFT OF MIST"
GRT-1	EPOXY GROUT	LATICRETE SPECTRALOCK 1	"78 STERLING SILVER"
LVT-1	LUXERY VINYL TILE	MANNINGTON COMMERCIAL	AMTICO", 18"X18" BEVELED EDGE; COLOR: PATINA ATOM AR0APT33 (INSTALL PATTERN - HALF BOND)
PL-1	PLASTIC LAMINATE	WILSONART	PALISADES OAK 7987-38 | FINE VELVET FINISH
PL-2	PLASTIC LAMINATE	WILSONART	POTTER'S CLAY 5011K-22 | ANTIQUE FINISH
PT-1	PAINT	SHERWIN-WILLIAMS	SW 7651 "FRONT PORCH"
PT-2	PAINT	SHERWIN-WILLIAMS	SW 7005 "PURE WHITE"
SCHL	SCHLUTER STRIP	SCHLUTER	
SLC-1	SEALED CONCRETE	SHERWIN-WILLIAMS	ARMORSEAL 1000 (WITH GRIP ADDITIVE)
T-1	PORCELAIN TILE FLOOR	AMERICAN OLEAN	THEORETICAL: LOGICAL GRAY TH95 12"X24"
TB-1	PORCELAIN TILE BASE	AMERICAN OLEAN	THEORETICAL: LOGICAL GRAY TH95 6"X24"
VB-1	VINYL BASE	JOHNSONITE	WELSH CASTLE TA8

RM. NO.	ROOM NAME	FINISHES				COMMENTS
		FLOOR	BASE	WALLS	CEILING	
100	STORAGE ROOM	SLC-1	N/A	EPT-1	EXPOSED	
101	EQUIPMENT ROOM	SLC-1	N/A	EPT-1	EXPOSED	
102	TOOL STORAGE	SLC-1	N/A	EPT-1	EXPOSED	
103	JAN	SLC-1	VB-1	PT-1	PT-2	
104	HALLWAY	SLC-1	N/A	EPT-1	PT-2	
105	RESTROOM	T-1/GRT-1	TB-1	CT-1 / PT-1	PT-2	
106	RESTROOM	T-1/GRT-1	TB-1	CT-1 / PT-1	PT-2	
107	OPEN OFFICE	LVT	VB-1	PT-1	ACT-1	
108	WATER SYSTEM MECH ROOM	SLC-1	N/A	EPT-1	EXPOSED	

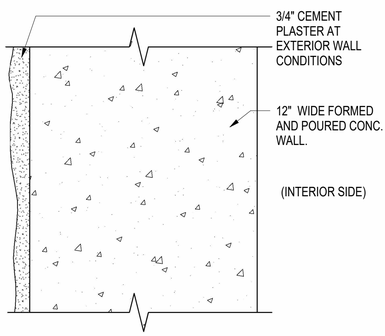

C1	CONCRETE WALL		
LOAD BEARING	FIRE RATING: +2 HRS	TEST:	IBC TABLE 722.2.1.1
	SOUND RATING: NOT RATED	TEST:	N/A

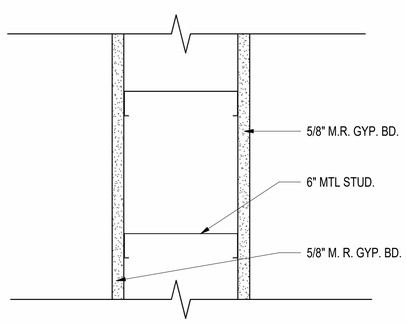

S6	METAL STUD WALL		
LOAD BEARING	FIRE RATING: N/A	TEST:	N/A
	SOUND RATING: NOT RATED	TEST:	N/A

[S6*] - SUBSTITUTE 5/8" CEMENT BACKER BOARD @ SHOWER SIDE WALLS
SEE INTERIOR ELEVATIONS FOR AREAS WITH A TILE FINISH

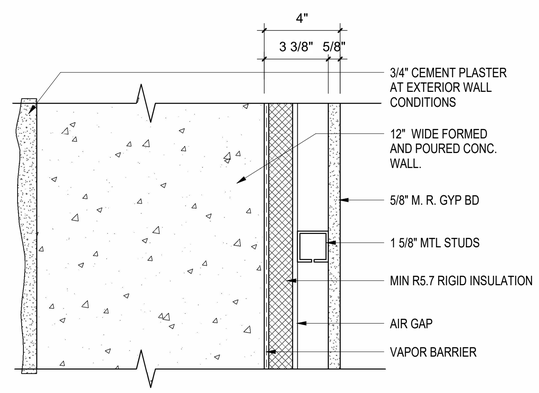

C1F	CONCRETE WALL		
LOAD BEARING	FIRE RATING: +2 HRS	TEST:	IBC TABLE 722.2.1.1
	SOUND RATING: NOT RATED	TEST:	N/A

DOOR SCHEDULE

DOOR NUMBERS	DOOR						FRAME			DETAILS			FIRE RATING	HDWR SET	COMMENTS
	TYPE	WIDTH	HEIGHT	THK	MATL	FINISH	TYPE	MATL	FINISH	HEAD	JAMB	SILL			
FIRST FLOOR															
100A	F	3' - 0"	7' - 0"	0' - 1 3/4"	HM	PTD.	HM	HM-1	PTD.	4/A-07	2/A-07		NA	TBD	
100B	R-UP	10' - 0"	10' - 0"	0' - 3"	MANUF.	PTD.	MANUF.	STL-1	PTD.	-	-		NA	TBD	
100C	F	3' - 0"	7' - 0"	0' - 1 3/4"	HM	PTD.	HM	HM-1	PTD.	4/A-07	2/A-07		NA	TBD	
100D	R-UP	10' - 0"	10' - 0"	0' - 3"	MANUF.	PTD.	MANUF.	STL-1	PTD.	-	-		NA	TBD	
101A	DF	6' - 0"	7' - 0"	0' - 1 3/4"	HM	PTD.	HM	HM-1	PTD.	6/A-07	6/A-07 SIM		NA	TBD	REMOVABLE TRANSOM
101B	F	3' - 0"	7' - 0"	0' - 1 3/4"	HM	PTD.	HM	HM-1	PTD.	6/A-07	6/A-07 SIM		NA	TBD	
101C	F	3' - 0"	7' - 0"	0' - 1 3/4"	HM	PTD.	HM	HM-1	PTD.	6/A-07	6/A-07 SIM		90	TBD	
102	F	3' - 0"	7' - 0"	0' - 1 3/4"	HM	PTD.	HM	HM-1	PTD.	6/A-07 SIM	6/A-07 SIM		90	TBD	
103	F	3' - 0"	7' - 0"	0' - 1 3/4"	HM	PTD.	HM	HM-1	PTD.	6/A-07	6/A-07 SIM		90	TBD	1" UNDERCUT
104A	F	3' - 0"	7' - 0"	0' - 1 3/4"	HM	PTD.	HM	HM-1	PTD.	6/A-07	6/A-07 SIM		90	TBD	
104B	F	3' - 0"	7' - 0"	0' - 1 3/4"	HM	PTD.	HM	HM-1	PTD.	6/A-07	6/A-07 SIM		NA	TBD	
105	F	3' - 0"	7' - 0"	0' - 1 3/4"	HM	PTD.	HM	HM-1	PTD.	8/A-07	8/A-07 SIM		NA	TBD	
106	F	3' - 0"	7' - 0"	0' - 1 3/4"	HM	PTD.	HM	HM-1	PTD.	8/A-07	8/A-07 SIM		NA	TBD	
107	F	3' - 0"	7' - 0"	0' - 1 3/4"	HM	PTD.	HM	HM-1	PTD.	8/A-07	8/A-07 SIM		NA	TBD	
108	F	3' - 0"	7' - 0"	0' - 1 3/4"	HM	PTD.	HM	HM-1	PTD.	6/A-07	6/A-07 SIM		NA	TBD	

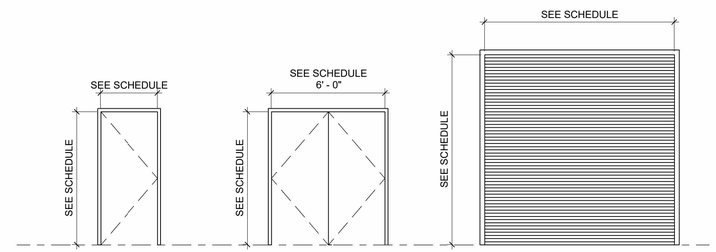

ELEVATION 1/4" = 1'-0"
DOOR TYPE ELEVATIONS

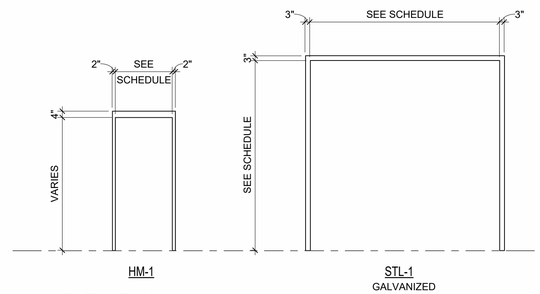

ELEVATION 1/4" = 1'-0"
FRAME TYPE ELEVATIONS

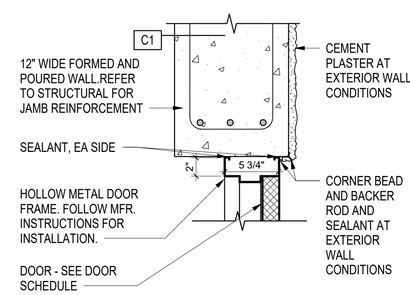

A2 / A-07 DETAIL 1 1/2" = 1'-0"
CONCRETE AT INT DOOR (7 5/8") JAMB
0 6" 1' 2' 4'

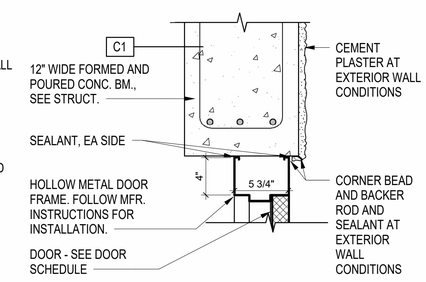

A4 / A-07 DETAIL 1 1/2" = 1'-0"
CONCRETE AT INT DOOR (7 5/8") HEAD
0 6" 1' 2' 4'

MARK	DESCRIPTION	REMARKS
HM	HOLLOW METAL (DOOR OR FRAME)	
HM-IN	HOLLOW METAL (INSULATED)	
WDSC	WOOD DOOR SOLID CORE	
ALUM	ALUM. STOREFRONT SYSTEM	
STL	STEEL	
P	PAINT FINISH	
STC	SOUND TRANSMISSION COEFICIENT	
N/A	NOT APPLICABLE	
ANO	ANODIZED	

DOOR MATERIAL LEGEND

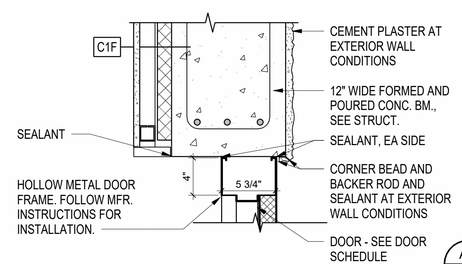

A6 / A-07 DETAIL 1 1/2" = 1'-0"
CONCRETE AT INT DOOR (7 5/8") HEAD
*JAMB SIM
0 6" 1' 2' 4'

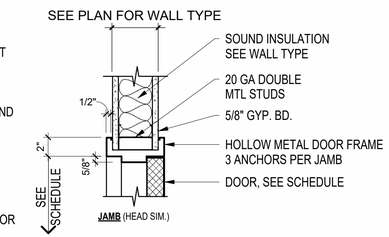

A8 / A-07 DETAIL 1 1/2" = 1'-0"
INTERIOR HM DOOR HEAD/JAMB DETAIL
0 6" 1' 2' 4'

CONSTRUCTION DOCUMENTS

NO.	DESCRIPTION	DATE	BY

Kimley»Horn
Sign of Quality

REGISTERED ARCHITECT
JENNIFER THORINGTON-HINES
2027-A
U.S. VIRGIN ISLANDS

KHA PROJECT 045826000
DATE JUNE 2026
SCALE As indicated
DESIGNED BY:MB
DRAWN BY:ZZ
CHECKED BY:JTH

DOOR SCHEDULE, DOOR DETAILS, FINISH SCHEDULE, FINISH LEGEND

LBJ PUMP STATION PREPARED FOR VIWMA

SHEET NUMBER
A-07

This document, together with the concepts and designs presented herein, as an instrument of service, is intended only for the specific purpose and client for which it was prepared. Reuse of and improper reliance on this document without written authorization and adaptation by Kimley-Horn and Associates, Inc. shall be without liability to Kimley-Horn and Associates, Inc.

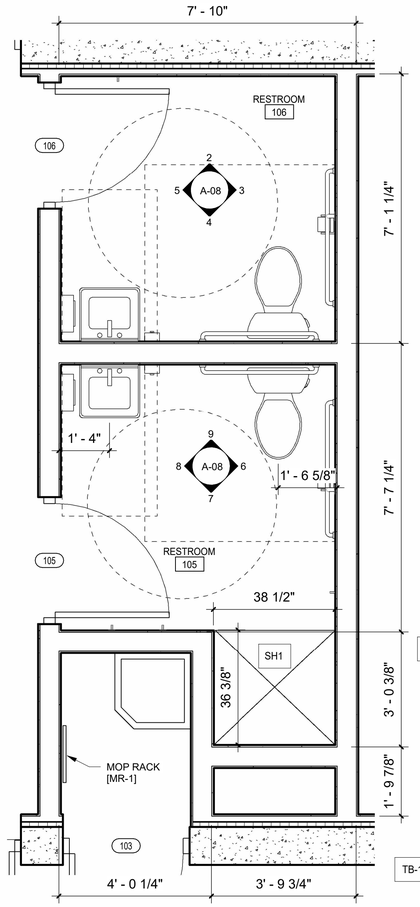

1 A-08 PLAN ENLARGEMENT 1/2" = 1'-0"
ENLARGED RESTROOMS FLOOR PLAN (REF.SHEET A-03)

JANITOR ACCESSORIES		
	MR-1	MOP AND BROOM HOLDER WITH SHELF: BOBRICK B-239, 36" INCHES, 4 HOLDERS, 3 HOOKS

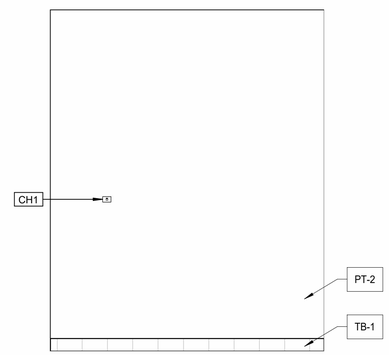

2 A-08 INTERIOR ELEV 1/2" = 1'-0"
RESTROOM 106 (REF.SHEET A-08)

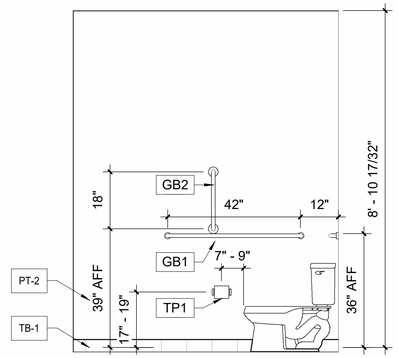

3 A-08 INTERIOR ELEV 1/2" = 1'-0"
RESTROOM 106 (REF.SHEET A-08)

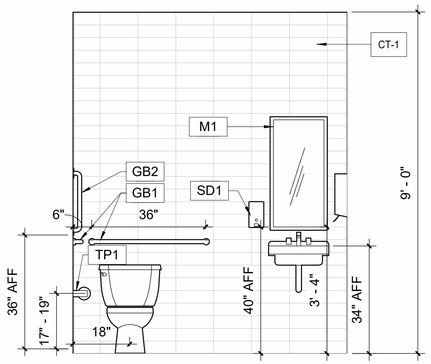

4 A-08 INTERIOR ELEV 1/2" = 1'-0"
RESTROOM 106 (REF.SHEET A-08)

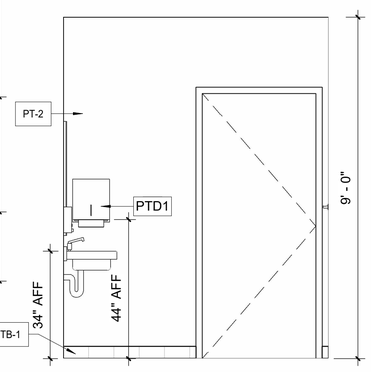

5 A-08 INTERIOR ELEV 1/2" = 1'-0"
RESTROOM 106 (REF.SHEET A-08)

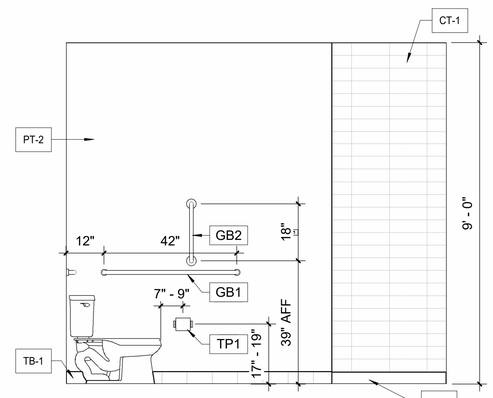

6 A-08 INTERIOR ELEV 1/2" = 1'-0"
RESTROOM 105 (REF.SHEET A-08)

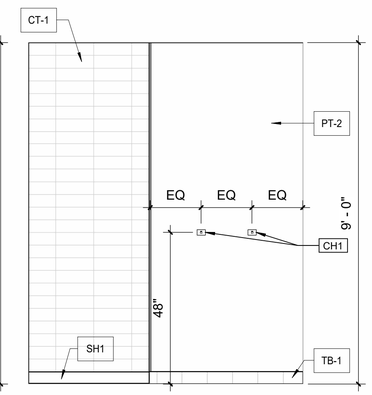

7 A-08 INTERIOR ELEV 1/2" = 1'-0"
RESTROOM 105 (REF.SHEET A-08)

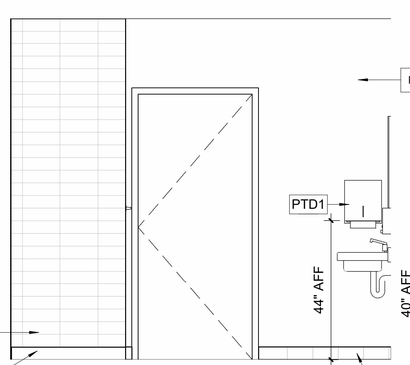

8 A-08 INTERIOR ELEV 1/2" = 1'-0"
RESTROOM 105 (REF.SHEET A-08)

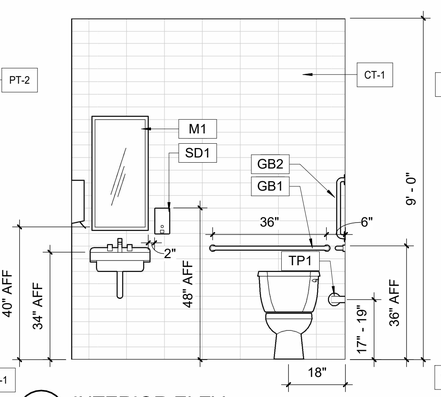

9 A-08 INTERIOR ELEV 1/2" = 1'-0"
RESTROOM 105 (REF.SHEET A-08)

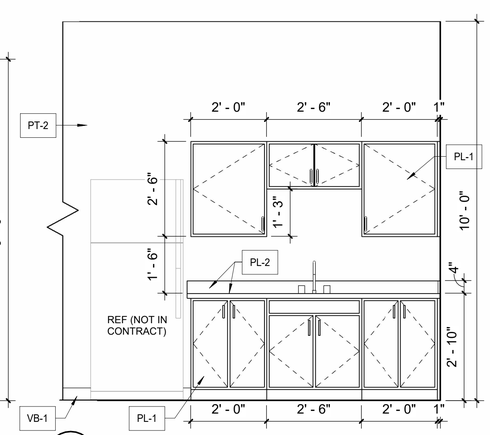

10 A-08 INTERIOR ELEV 1/2" = 1'-0"
OPEN OFFICE INTERIOR ELEVATION (REF.SHEET A-03)

FINISH LEVEL SCHEDULE

FINISH LEVEL SCHEDULE INDICATED HEREIN IS A GENERAL LISTING OF GYPSUM BOARD WALL FINISHES. FOR A DETAILED DESCRIPTION REFER TO C840 STANDARD SPECIFICATION FOR 'APPLICATION AND FINISHING OF GYPSUM BAORD' AS PUBLISHED BY 'ASTM'.

LEVEL 1 ABOVE FINISHED CEILINGS CONCEALED FROM VIEW
LEVEL 2 UTILITY AREAS AND AREAS BEHING CABINETRY
LEVEL 3 WALLS SCHEDULED TO RECEIVE TEXTURED WALL FINISH
LEVEL 4 WALLS AND CEILINGS SCHEDULED TO RECEIVE FLAT OR EGGSHELL PAINT
LEVEL 5 WALLS AND CEILINGS SCHEDULED TO RECEIVE SEMI-GLOSS OR GLOSS PAINT

PARTITION GENERAL NOTES

1. FOR EXTERIOR WALLS, SEE BUILDING AND WALL SECTIONS FOR CONSTRUCTION REQUIREMENTS.
2. PROVIDE 'MOISTURE RESISTANT' GYPSUM BOARD AT ALL LOCATIONS.
3. SHOWER AREAS SHALL HAVE CEMENT BACKING BOARD IN LIEU OF MOISTURE RESISTANT GYPSUM BOARD.
4. PROVIDE MINIMUM TWO STUDS AT ALL DOOR JAMBS FULL HEIGHT OF WALL AT ALL INTERIOR STUD PARTITIONS.
5. SEAL AROUND PERIMETER OF ALL FIRE AND SOUND RATED WALLS AND PARTITIONS IN ACCORDANCE WITH ALL FIRE AND STC RATINGS AND AS REQUIRED BY ALL APPLICABLE BUILDING CODES.
6. TYPICAL IN PARTITION CAVITIES AT ALL WALL MOUNTED MILLWORK, CASEWORK, EQUIPMENT, GRAB BARS, ACCESSORIES ETC. PROVIDE FIRE RETARDANT WOOD BLOCKING AS REQUIRED TO SUIT THE INSTALLATION OF THE ITEM ANCHORED TO METAL STUDS ON 24 INCH CENTERS MAXIMUM. PROVIDE BLOCKING FULL WIDTH PLUS 12 INCHES PAST EACH END OF CASEWORK OR EQUIPMENT THAT IS TO BE WALL MOUNTED OR ANCHORED TO WALL. PROVIDE ONE STUD AT EACH END OF THE BLOCKING TO SECURE ITEM TO THE PARTITION. COORDINATE EXACT LOCATIONS OF WALL MOUNTED EQUIPMENT WITH OWNER OR EQUIPMENT PROVIDER.
7. CONTROL JOINTS SHALL BE PROVIDED IN ALL M.R. GYPSUM WALL BOARD PARTITIONS AND SHALL NOT EXCEED 30' CENTERS. CEILING JOINTS SHALL ALSO NOT EXCEED 30' CENTERS AND NO MORE THAN 900 SQUARE FEET IN AREA.
8. COORDINATE LOCATIONS OF PLENUM AIR TRANSFER BETWEEN CORRIDORS AND ROOMS WITH MECHANICAL CONTRACTOR.
9. REFER TO ROOM FINISH SCHEDULE FOR WALL FINISHES.
10. ALL INSULATION EXPOSED TO HVAC RETURN AIR PLENUMS SHALL COMPLY WITH BUILDING CODE FLAME SPREAD REQUIREMENTS.
11. ROOF DECK DEFLECTION: ALL PARTITIONS TERMINATING AT ROOF DECKS SHALL ACCOMMODATE 1/2" MINIMUM MOVEMENTS OF ROOF SYSTEM.
12. FULL HEIGHT PARTITIONS TERMINATING AT METAL ROOF DECKS SHALL NOT BE ATTACHED TO ROOF DECKING. REFER TO DETAILS.

TOILET ACCESSORIES LEGEND

PART	TAG	DESCRIPTION
	GB1	GRAB BAR L-SHAPED 36" & 42" LONG GRAB BARS BOBRICK B-6806 SERIES
	GB2	STRAIGHT GRAB BAR 36" LONG GRAB BAR BOBRICK B-6806 SERIES
	M1	MIRROR: PLATE GLASS 1/4" THICK WITH FRAME BOBRICK B-165 (18" x 36")
	PTD1	SURFACE-MOUNTED PAPER TOWEL DISPENSER BOBRICK B-2860
	TP1	PROJECT SOURCE TOILET PAPER DISPENSER MODEL #FSI STP CROM OR SIMILAR
	SD1	SOAP DISPENSER BOBRICK B2111
	CH1	COAT/TOWEL HOOK BOBRICK B-76727
	SH1	FREEDOM SHOWERS ACCESSIBLE PAN: MODEL APF3838BFPANRRF

NO.	DESCRIPTION	DATE	BY

Kimley»Horn
EDT Sign of Quality

REGISTERED ARCHITECT
JENNIFER THORINGTON-HINES
2027-A
U.S. VIRGIN ISLANDS

KHA PROJECT 045826000
DATE JUNE 2026
SCALE:As Indicated
DESIGNED BY:MB
DRAWN BY:ZZ
CHECKED BY:JTH

INTERIOR ELEVATIONS

LBJ PUMP STATION PREPARED FOR VIWMA

CONSTRUCTION DOCUMENTS

SHEET NUMBER
A-08

This document, together with the concepts and designs presented herein, as an instrument of service, is intended only for the specific purpose and client for which it was prepared. Reuse of and improper reliance on this document without written authorization and adaptation by Kimley-Horn and Associates, Inc. shall be without liability to Kimley-Horn and Associates, Inc.

MECHANICAL ANNOTATIONS

SYMBOL	ABBREVIATION	DESCRIPTION
RTU #		MECHANICAL EQUIPMENT - (SEE MECHANICAL SCHEDULE)
1 M6.1		DETAIL REFERENCE CALLOUT, DETAIL NUMBER AND SHEET
1 M3.1		SECTION VIEW CALLOUT, DETAIL NUMBER AND SHEET
	POC	POINT OF CONNECTION - NEW ITEMS TO EXISTING ITEMS
L-1		PLUMBING FIXTURE SCHEDULE - (SEE SCHEDULE)
?		SHEET NOTES
	AP	ACCESS PANEL
		DIFFUSER / GRILLE / REGISTER TAG EXAMPLE: CD-1 / 12"Ø / 500 DESCRIPTION: (TYPE) / (NECK SIZE) / (CFM)
T	TSTAT	THERMOSTAT
RTS		ROOM TEMPERATURE SENSOR
CO		CARBON MONOXIDE SENSOR
CO2		CARBON DIOXIDE SENSOR
NO2		NITROGEN DIOXIDE SENSOR
BD		BACKDRAFT DAMPER
SD		DUCT MOUNTED SMOKE DETECTOR
TCP		TEMPERATURE CONTROL PANEL
TS		TEMPERATURE SENSOR
DP		DIFFERENTIAL PRESSURE SENSOR
ES		EMERGENCY SHUTDOWN SWITCH

MECHANICAL SYMBOLS AND LEGEND - AIR SIDE

SYMBOL	ABBREVIATION	DESCRIPTION
		SUPPLY AIR DIFFUSER
		RETURN AIR GRILLE
		EXHAUST AIR GRILLE
		ROUND FLEX DUCT
	FD	FIRE DAMPER
	SD	SMOKE DAMPER
	FSD	COMBINATION FIRE/SMOKE DAMPER
12"x12" OR 12"x12"		RECTANGULAR DUCT SIZE, TOP LENGTH BY SIDE LENGTH
	MVD	MANUAL VOLUME/BALANCING DAMPER
		DUCT WITH INTERNAL INSULATION
		SQUARE TO ROUND DUCT TRANSITION
		DUCT SIZE TRANSITION
		MITERED ELBOW WITH TURNING VANES
	SA	SUPPLY AIR DUCT DOWN
	SA	SUPPLY AIR DUCT UP
	RA	RETURN AIR DUCT DOWN
	RA	RETURN AIR DUCT UP
	EA	EXHAUST AIR DUCT DOWN
	EA	EXHAUST AIR DUCT UP
	MD	MOTORIZED DAMPER
	OPD	OPPOSED BLADE DAMPER
—RS/RL—	RS/RL	REFRIGERANT SUCTION AND LIQUID LINE SET/PIPING

MECHANICAL GENERAL NOTES:

1. MECHANICAL WORK SHALL CONFORM WITH THE LATEST ADOPTED LOCAL CODES, ORDINANCES, AND DESIGN REQUIREMENTS UNLESS OTHERWISE APPROVED BY THE AUTHORITY HAVING JURISDICTION (AHJ).
2. CONTRACTOR SHALL COORDINATE WITH STRUCTURAL REQUIREMENTS BEFORE DRILLING OR CUTTING ANY CMU WALLS, CEILING JOISTS OR STRUCTURAL ELEMENTS.
3. CONTRACTOR TO PROVIDE ALL REQUIRED LABOR, MATERIALS, EQUIPMENT, AND INSURANCES TO COMPLETE THE DESIGN PER THE INTENT OF THE DRAWINGS AND SPECIFICATIONS TO THE SATISFACTION OF THE ENGINEER/ARCHITECT.
4. CONTRACTOR TO PROVIDE ALL REQUIRED PERMITS AND FEES TO COMPLETE THE PROJECT.
5. THESE DRAWINGS SHALL BE READ IN CONJUNCTION WITH DRAWINGS PROVIDED BY OTHER DISCIPLINES. CONSTRUCTION CONFLICTS ARE TO BE BROUGHT TO THE ATTENTION OF THE ENGINEER/ARCHITECT.
6. DUE TO THE SMALL SCALE OF THE DRAWINGS, IT IS NOT FEASIBLE TO SHOW ALL REQUIRED OFFSETS, ELEVATIONS, ETC., IT IS THEREFORE THE CONTRACTORS RESPONSIBILITY TO VERIFY THE REQUIRED ROUTING, ELEVATION, AND PLACEMENT OF EQUIPMENT AND PROVIDE REQUIRED OFFSETS INSTALLED IN ACCORDANCE WITH SMACNA STANDARDS AND THE SPECIFICATIONS TO MEET THE INTENT OF THE DESIGN. ALL DIMENSIONS AND MEASUREMENTS SHALL BE VERIFIED ONSITE BEFORE FABRICATION AND/OR INSTALLATION OF THE EQUIPMENT.
7. ALL INFORMATION SHOWN ON SCHEDULES ARE BASED ON AVAILABLE PRODUCT INFORMATION AT THE TIME OF DESIGN.
8. THE CONTRACTOR SHALL KEEP INSTALLATION INSTRUCTIONS FOR ALL LISTED EQUIPMENT ON THIS PROJECT AT THE JOBSITE AND SHALL HAVE THEM ACCESSIBLE FOR THE FIELD INSPECTOR UPON REQUEST.
9. PROVIDED DRAWINGS BY THE ENGINEER DOES NOT RELIEVE THE CONTRACTOR OF THE RESPONSIBILITY TO PROVIDE AN INSTALLATION SUITABLE IN DIMENSION, CONSTRUCTION, FUNCTION AND FINISH FOR THE PURPOSE INTENDED.
10. ANY DISCREPANCIES DURING BID SHALL BE BROUGHT TO THE ATTENTION OF THE ENGINEER/ARCHITECT AND RESOLVED PRIOR TO FINALIZATION OF THE CONSTRUCTION CONTRACT.
11. THE CONTRACTOR SHALL BE RESPONSIBLE FOR THE COORDINATION OF ALL TRADE.
12. EXACT LOCATION OF ACCESS PANELS SHALL BE COORDINATED WITH FINAL PLACEMENT OF ALL VALVES, DAMPERS, AND ANY OTHER COMPONENT IDENTIFIED ON THE DRAWINGS.
13. FINISH AND COLOR OF EXTERNAL SURFACES FOR EXPOSED UNITS, DUCTWORK, OR PIPING SHALL BE APPROVED BY THE ARCHITECT.
14. CONTRACTOR SHALL PERFORM TESTING AND ADJUSTING AS REQUIRED FOR ALL EQUIPMENT AND/OR SYSTEMS WITHIN THIS SCOPE OF WORK PER THE SPECIFICATIONS.

APPLICABLE CODES:

2018 INTERNATIONAL BUILDING CODE (IBC)
2018 INTERNATIONAL ENERGY CONSERVATION CODE (IECC)
2018 INTERNATIONAL PLUMBING CODE (IPC)
2017 NATIONAL ELECTRIC CODE (NEC)
2018 INTERNATIONAL FIRE CODE (IFC)
2018 INTERNATIONAL MECHANICAL CODE (IMC)
2018 INTERNATIONAL FUEL GAS CODE (IFGC)

DESIGN CONDITIONS:

AMBIENT DESIGN TEMPERATURES
SUMMER: 89.8°F db / 78.5°F wb

THERMOSTAT SETPOINTS:
OCCUPIED: COOLING: 70°F

UNOCCUPIED: COOLING: 75°F

CONSTRUCTION DOCUMENTS

No.	REVISIONS	DATE	BY

Kimley»Horn
Sign of Quality

PROFESSIONAL ENGINEER
ALEXANDER ALFORD, P.E.
1982-E
U.S. VIRGIN ISLANDS
Date 7/2026

KHA PROJECT 045826000
DATE JUNE 2026
SCALE AS SHOWN
DESIGNED BY AAF
DRAWN BY AAF
CHECKED BY AA

MECHANICAL NOTES AND LEGENDS

LBJ PUMP STATION
PREPARED FOR
VIWMA

SHEET NUMBER
MV-01

This document, together with the concepts and designs presented herein, as an instrument of service, is intended only for the specific purpose and client for which it was prepared. Reuse of and improper reliance on this document without written authorization and adaptation by Kimley-Horn and Associates, Inc. shall be without liability to Kimley-Horn and Associates, Inc.

Autodesk Docs://045826000 - LBJ Pump Station Saint Croix R24/045826000 LBJ pump station Saint Croix MEP R24.rvt

GRILLES, REGISTERS, & DIFFUSERS SCHEDULE

NOTES:
1. NECK SIZE SHOWN ON DRAWINGS. PROVIDE BRANCH DUCT TO MATCH NECK SIZE UNLESS OTHERWISE SHOWN ON DRAWINGS.
2. FRAME TO MATCH CEILING/WALL CONSTRUCTION, COORDINATE WITH ARCHITECTURAL REFLECTED CEILING/WALL PLAN.

MARK	MATERIAL	FACE TYPE	FACE SIZE	MARGIN	FINISH	MAX AIRFLOW	MAX APD (IN W.C.)	MAX NC	MANUFACTURER	MODEL	NOTES
CD-1	STEEL	LOUVERED	24"X24"	LAY-IN	WHITE	1000 CFM	0.10	30	TITUS	TMS	1-2
CD-2	STEEL	LOUVERED	12"X12"	SURFACE	WHITE	244 CFM	0.10	30	TITUS	TMS	1-2
EG-1	STEEL	LOUVERED	12"X12"	SURFACE	WHITE	244 CFM	0.10	35	TITUS	PAR	1-2
RG-1	STEEL	PERFORATED	24"X24"	LAY-IN	WHITE	1000 CFM	0.08	30	TITUS	PAR	1-2

OUTSIDE AIR CALCULATIONS (SEE NOTES 1, 2)

SPACE	OCCUPANCY CLASSIFICATION	OCCUPANTS PER 1,000 SQ. FT	CFM PER OCCUPANT	CFM PER SQ. FT.	AREA (SQ. FT.)	QTY. OF OCCUPANTS	DIVERSITY FACTOR	AREA OSA CFM MINIMUM	AREA CFM TOTAL	ZONE AIR DIST. EFFECT. (Ez)	UNIT OSA CFM MINIMUM (Ez CORRECTED)	UNIT OSA CFM TOTAL (Ez CORRECTED)	ZONE PRIMARY AIRFLOW (CFM)	OSA FRACTION (Zd)	ZONE VENTILATION EFFICIENCY (Evz)	SYSTEM VENTILATION EFFICIENCY USED (Evz)	UNIT OSA MINIMUM (CORRECTED)	UNIT OSA MAXIMUM (CORRECTED)
Open Office	OFFICE SPACES	5	5	0.06	189	1	1.00	11	16	0.8	14	20	362	0.06	1.01	1.01	14	20

NOTES:
1. CALCULATIONS BASED ON THE 2018 IMC TABLE 403.3.
2. OUTSIDE AIR VALUES REPRESENT ZONE AIR DISTRIBUTION EFFECTIVINESS AND SYSTEM VENTILATION EFFICIENCY ADJUSTMENTS. CALCULATED USING Evz = 1-XS-Zd FROM ASHRAE 62.1, APPENDIX A.

LOUVER SCHEDULE

NOTES:
1. PROVIDE 1/4" MESH ALUMINUM BIRD SCREEN.
2. PROVIDE STANDARD POWDERCOAT FINISH AND COORDINATE COLOR WITH ARCHITECT.
3. PROVIDE WITH CHANNEL FRAME.
4. PROVIDE WITH INTEGRAL 120V MOTOR OPERATED LOW-LEAKAGE DAMPER.
5. PROVIDE LOUVER WITH WIND DRIVEN RAIN PERFORMANCE AS DEFINED IN THE SPECIFICATIONS.
6.INTERLOCK MOTOR-OPERATED DAMPER WITH GAS DETECTION SYSTEM AND EF-4 AND EF-5.

MARK	SERVICE	ASSOCIATED UNIT	SIZE		AIRFLOW (CFM)	MIN. FREE AREA	MAX VELOCITY	MAX APD (IN W.C.)	MANUFACTURER	MODEL	NOTES
			WIDTH	HEIGHT							
L-1	INTAKE	EF-4	12"	14"	130	0.3 ft²	474 FPM	0.03	GREENHECK	EVH-302	1-5
L-2	INTAKE	EF-5,6	24"	44"	1615	3.4 ft²	474 FPM	0.03	GREENHECK	EVH-302	1-3, 5, 6
L-3	INTAKE	EF-5,6	24"	44"	1615	3.1 ft²	474 FPM	0.03	GREENHECK	EVH-302	1-3, 5, 6
L-4	EXHAUST	EF-4,5	40"	30"	1745	3.8 ft²	464 FPM	0.03	GREENHECK	EVH-302	1-5
L-5	EXHAUST	EF-6	40"	28"	1615	3.4 ft²	470 FPM	0.03	GREENHECK	EVH-302	1-5
L-6	EXHAUST	EF-1,2,3	24"	14"	320	0.7 ft²	476 FPM	0.03	GREENHECK	EVH-302	1-5
L-7	INTAKE	FCU-1,2	20"	16"	330	0.7 ft²	489 FPM	0.03	GREENHECK	EVH-302	1-5

MECHANICAL VENTILATION CALCULATION
STORAGE AREA

STORAGE AREA SQUARE FOOTAGE:	2150 SF
EMERGENCY EXHUAST RATE PER 2018 IMC[A]:	1.5 CFM/SF
REQUIRED VENTILATION:	3225 CFM
PROPOSED VENTILATION:	3230 CFM
MIN CONTINUOUS VENTILATION:	0.06 CFM/SF
REQUIRED VENTILATION:	129 CFM
PROPOSED VENTILATION:	130 CFM

A: EXHAUST RATE APPLIES UPON DETECTION OF CO OR NO_2 IN THE AREA.

FAN SCHEDULE

NOTES:
1. COORDINATE ELECTRICAL REQUIREMENTS WITH ELECTRICAL CONTRACTOR.
2. PROVIDE WITH MANUFACTURER'S FAN SPEED CONTROLLER FOR BALANCING PURPOSES.
3. PROVIDE WITH AUXILIARY CONTACTS FOR SHUTDOWN UPON NOTIFICATION FROM FIRE ALARM SYSTEM.
4. INTERLOCK FAN OPERATION TO OCCUPANCY SENSOR.
5. FAN TO RUN CONTINUOUSLY.
6. INTERLOCK FAN OPERATION WITH GAS DETECTION SYSTEM.

MARK	LOCATION	FAN TYPE	AIRFLOW (CFM)	ESP (IN W.C.)	FAN RPM	DRIVE	ELECTRICAL					WEIGHT	MANUFACTURER	MODEL	NOTES
							VOLTAGE	PHASE	HZ	MOP (A)	HP				
EF-1	WATER SYSTEM MECH ROOM	INLINE	90	0.10	1220	DIRECT	115 V	1	60	5	0.01	30 lb	GREENHECK	SQ-70-VG	1-3,5
EF-2	RESTROOM 106	INLINE	140	0.30	1689	DIRECT	115 V	1	60	5	0.04	30 lb	GREENHECK	SQ-70-VG	1-4
EF-3	TOOL ROOM	INLINE	90	0.10	1220	DIRECT	115 V	1	60	5	0.01	30 lb	GREENHECK	SQ-70-VG	1-3,5
EF-4	STORAGE 100	INLINE	130	0.20	985	DIRECT	208 V	1	60	15	0.17	34 lb	GREENHECK	SQ-80-VG	1-3,5
EF-5	STORAGE 100	INLINE	1615	0.20	1140	DIRECT	208 V	1	60	5	0.30	75 lb	GREENHECK	SQ-140	1-3,6
EF-6	STORAGE 100	INLINE	1615	0.20	1140	DIRECT	208 V	1	60	5	0.30	75 lb	GREENHECK	SQ-140	1-3,6

SPLIT SYSTEM - INDOOR FAN COIL UNIT

NOTES:
1. INDOOR UNIT IS POWERED BY OUTDOOR UNIT
2. PROVIDE WITH MERV 13 FILTER.
3. PROVIDE WITH MANUFACTURER'S THERMOSTAT.
4. PROVIDE WITH FACTORY LINSETS, SEE PLANS FOR ROUTING.
5. PROVIDE WITH CONDENSATE PUMP.
6. COOLING ONLY UNIT.

MARK	UNIT TYPE	SUPPLY FAN			COOLING COIL				ELECTRICAL			ASSOCIATED UNIT	WEIGHT	MANUFACTURER	MODEL	NOTES
		AIRFLOW (CFM)	ESP (IN W.C)	OUTDOOR AIR REQUIRED	TOTAL CAP (MBH)	EAT DB (°F)	EAT WB (°F)	SEER	VOLTAGE	PHASE	HZ					
FCU-1	MID STATIC DUCTED	512	0.20	240 CFM	24.0	84.7	75.7	20	208 V	1	60 Hz	CU-1	60 lb	TRANE	PEAD-AA12NL	1-6
FCU-2	MID STATIC DUCTED	320	0.05	90 CFM	12.0	81.8	73.0	21.1	208 V	1	60 Hz	CU-2	60 lb	TRANE	PEAD-A12AA7	1-6

SPLIT SYSTEM - OUTDOOR CONDENSING UNIT SCHEDULE

NOTES:
1. EQUIPMENT SELECTED FOR 0' ABOVE SEA LEVEL.
2. UNIT TO BE BLUE FIN COATED.
3. PROVIDE WITH MANUFACTURER'S MOUNTING PAD.
4. COOLING ONLY UNIT.

MARK	LOCATION	COOLING					ELECTRICAL					ASSOCIATED UNIT	WEIGHT	MANUFACTURER	MODEL	NOTES
		TOTAL CAP (MBH)	SUMMER AMBIENT		SEER	REFRIGERANT TYPE	VOLTAGE	PHASE	HZ	MCA	MOCP					
			DB (°F)	WB (°F)												
CU-1	GROUND	24.0	89.8	78.5	20	R454B	208 V	1	60 Hz	16 A	27 A	FCU-1	100 lb	TRANE	PUY-AK12NL	1-4
CU-2	GROUND	12.0	89.8	78.5	21.1	R454B	208 V	1	60 Hz	11 A	28 A	FCU-2	110 lb	TRANE	PUY-A12NKA7	1-4

CRAC - INDOOR FAN COIL UNIT SCHEDULE

NOTES:
1. PROVIDE WITH CONDENSATE PUMP.

MARK	LOCATION	UNIT TYPE	SUPPLY FAN		COOLING		ELECTRICAL					ASSOCIATED UNIT	WEIGHT (LBS)	MANUFACTURER	MODEL	NOTES
			AIRFLOW (CFM)	ESP (IN W.C.)	TOTAL CAP (MBH)	REF TYPE	VOLTAGE	PHASE	HZ	FLA	MOCP					
AC-3	ELECTRICAL ROOM	CABINET UPFLOW	2800	0.20	62.5	R-410A	208 V	3	60 Hz	34 A	60 A	CU-3	670	LIEBERT	PX018UA1DD020801P0B0CA	1
AC-4	ELECTRICAL ROOM	CABINET UPFLOW	2800	0.20	62.5	R-410A	208 V	3	60 Hz	34 A	60 A	CU-2	670	LIEBERT	PX018UA1DD020801P0B0CA	1

CRAC - OUTDOOR CONDENSING UNIT SCHEDULE

NOTES:
1. UNIT TO BE SALT SPRAY TESTED.

MARK	REFRIGERANT TYPE	COOLING			ELECTRICAL					WEIGHT (LBS)	MANUFACTURER	MODEL	NOTES
		TOTAL CAP (MBH)	AMBIENT		VOLTAGE	PHASE	HZ	FLA	MOP (A)				
			DB (°F)	WB (°F)									
CU-3	R454B	60.0	89.8	78.5	208 V	1	60 Hz	3 A	15	400	LIEBERT	MCS028E1	1
CU-4	R454B	60.0	89.8	78.5	208 V	1	60 Hz	3 A	15	400	LIEBERT	MCS028E1	1

CONSTRUCTION DOCUMENTS

No.	REVISIONS	DATE	BY

Kimley»Horn
Sign of Quality

PROFESSIONAL ENGINEER
ALEXANDER ALFORD, P.E.
1982-E
U.S. VIRGIN ISLANDS
06/09/2026

KHA PROJECT 045826000
DATE JUNE 2026
SCALE AS SHOWN
DESIGNED BY AAF
DRAWN BY AAF
CHECKED BY AA

MECHANICAL SCHEDULES AND CALCULATIONS

LBJ PUMP STATION
PREPARED FOR VIWMA

SHEET NUMBER
MV-02

This document, together with the concepts and designs presented herein, as an instrument of service, is intended only for the specific purpose and client for which it was prepared. Reuse of and improper reliance on this document without written authorization and adaptation by Kimley-Horn and Associates, Inc. shall be without liability to Kimley-Horn and Associates, Inc.

Autodesk Docs://045826000 - LBJ Pump Station Saint Croix P24/045826000 LBJ pump station Saint Croix.rvt, R24.4

GENERAL NOTES:

1. SEE DETAIL 1/MV-04 FOR CU SUPPORT CURB DETAIL
2. SEE DETAIL 2/MV-04 FOR LOUVER INSTALL DETAIL
3. SEE DETAIL 3/MV-04 FOR INLINE EXHAUST FAN INSTALL DETAIL
4. SEE DETAIL 4/MV-04 FOR HORIZONTAL FAN COIL DETAIL
5. SEE DETAIL 5/MV-04 FOR LAY-IN DIFFUSER DUCT CONNECTIONS

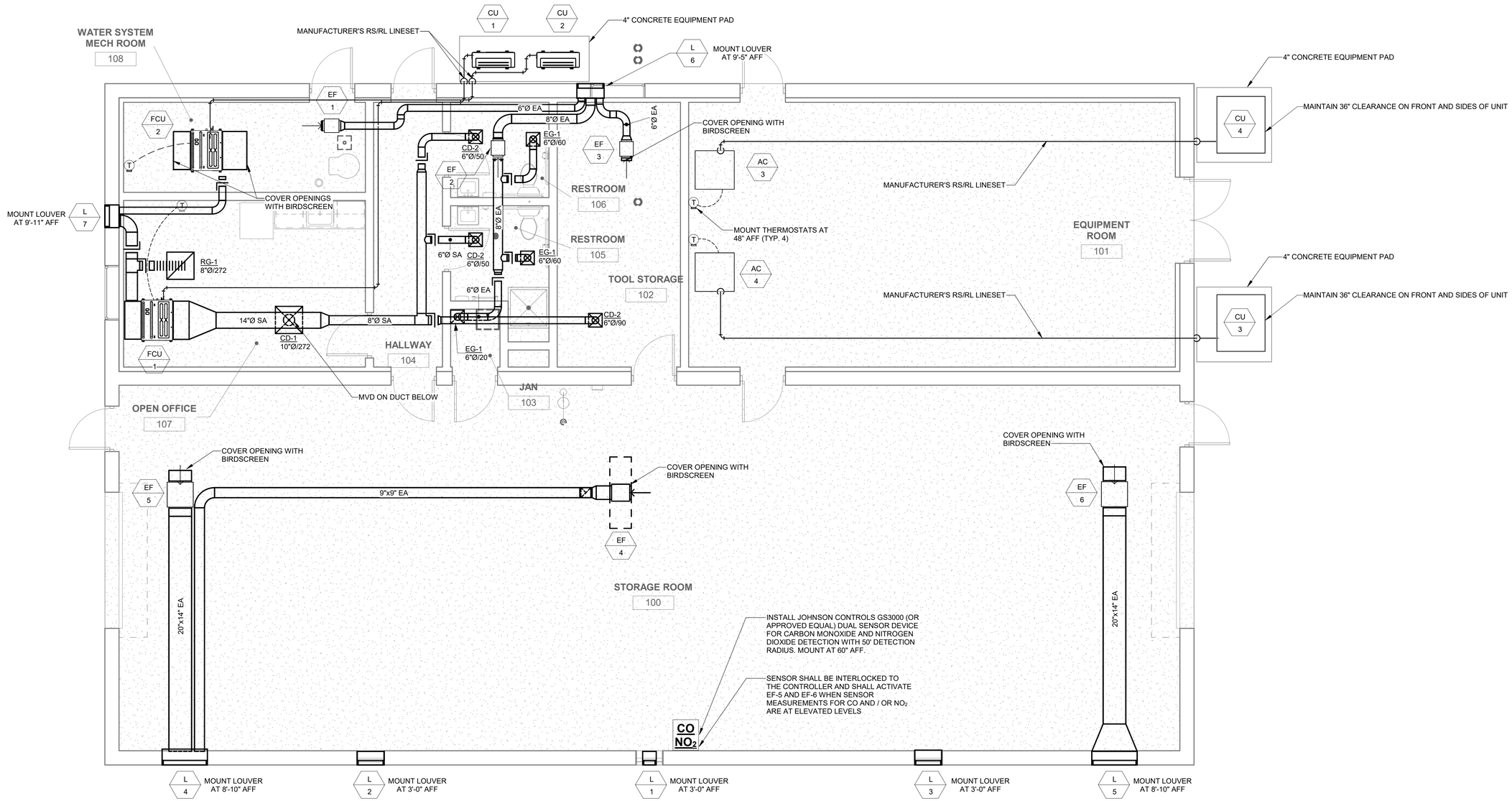

1 MECHANICAL FLOOR PLAN

1/4" = 1'-0"

CONSTRUCTION DOCUMENTS

No.	REVISIONS	DATE	BY

Kimley»Horn

EDPT Sign of Quality

PROFESSIONAL ENGINEER
ALEXANDER ALFORD, P.E.
1982-E
U.S. VIRGIN ISLANDS
06/09/2026

KHA PROJECT	045826000
DATE	JUNE 2026
SCALE	AS SHOWN
DESIGNED BY	AAF
DRAWN BY	AAF
CHECKED BY	AA

MECHANICAL FLOOR PLAN

LBJ PUMP STATION
PREPARED FOR
VIWMA

SHEET NUMBER
MV-03

This document, together with the concepts and designs presented herein, as an instrument of service, is intended only for the specific purpose and client for which it was prepared. Reuse of and improper reliance on this document without written authorization and adaptation by Kimley-Horn and Associates, Inc. shall be without liability to Kimley-Horn and Associates, Inc.

A:\Admin Docs\045826000 - LBJ Pump Station Saint Croix P24\045826000_LBJ pump station Saint Croix MEP_R24.rvt

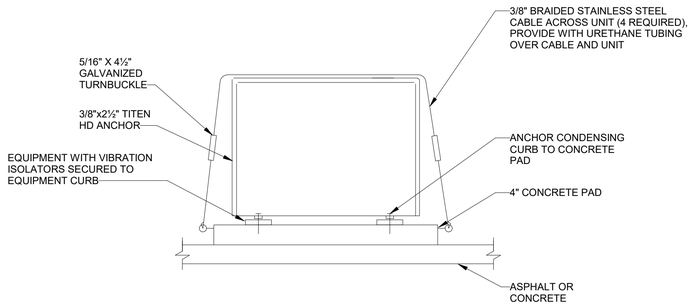

1 CONDENSING UNIT SUPPORT CURB DETAIL

N.T.S

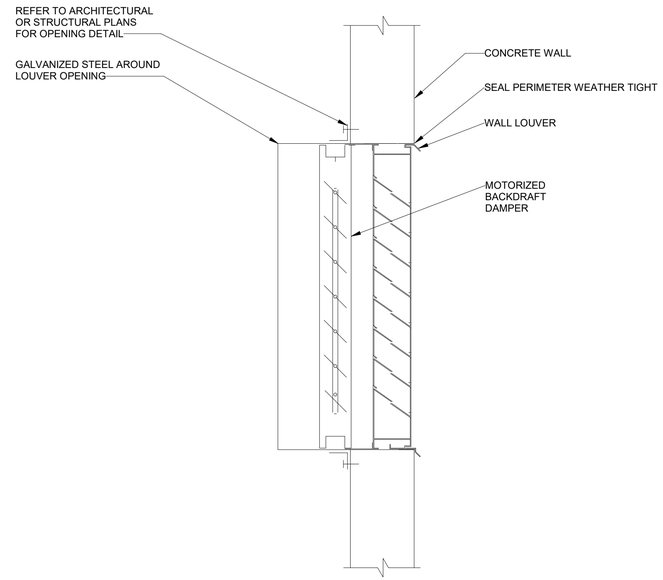

2 LOUVER DETAIL

N.T.S

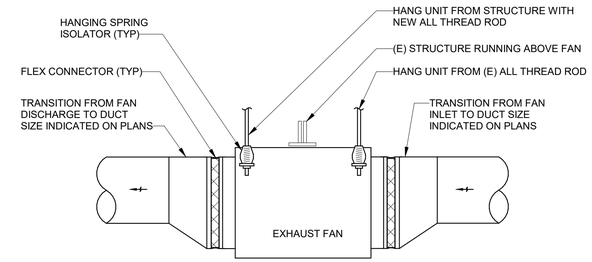

3 EXHAUST FAN MOUNTING DETAIL

N.T.S

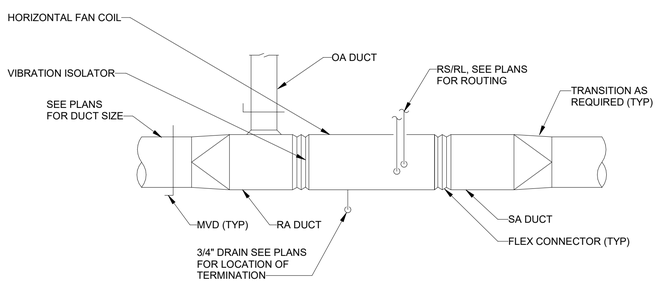

4 HORIZONTAL FAN COIL DETAIL

N.T.S

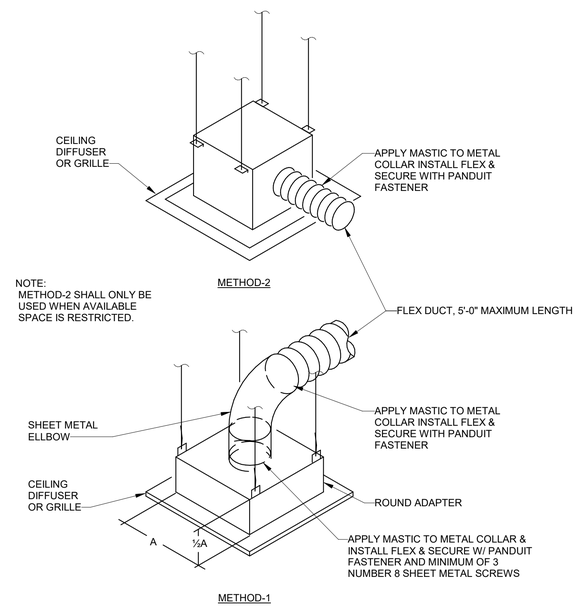

5 LAY-IN CEILING DIFFUSER DETAIL

N.T.S

CONSTRUCTION DOCUMENTS

No.	REVISIONS	DATE	BY

Kimley»Horn

Sign of Quality

PROFESSIONAL ENGINEER
ALEXANDER ALFORD, P.E.
1982-E
U.S. VIRGIN ISLANDS
06/05/2026

KHA PROJECT 045826000
DATE JUNE 2026
SCALE AS SHOWN
DESIGNED BY AAF
DRAWN BY AAF
CHECKED BY AA

MECHANICAL DETAILS

LBJ PUMP STATION
PREPARED FOR
VIWMA

SHEET NUMBER
MV-04

This document, together with the concepts and designs presented herein, as an instrument of service, is intended only for the specific purpose and client for which it was prepared. Reuse of and improper reliance on this document without written authorization and adaptation by Kimley-Horn and Associates, Inc. shall be without liability to Kimley-Horn and Associates, Inc.

Autodesk Docs://045826000 - LBJ Pump Station Saint Croix P24/045826000 LBJ pump station Saint Croix MEP P24.rvt

PLUMBING PIPING LEGEND

SYMBOL	ABBREVIATION	DESCRIPTION
—— – ——	CW	COLD WATER
—— – – ——	HW	HOT WATER SUPPLY
— – – – —	HWR	HOT WATER RETURN
— — — —	W	SANITARY WASTE
————	W	SANITARY WASTE (ABOVE GRADE)
— · — · —	GLW	GREASE LADEN WASTE
————	V	VENT PIPING
– – ST – –	ST	STORM OR ROOF DRAIN PIPING
—— ST ——	ST	STORM OR ROOF DRAIN PIPING (ABOVE GRADE)
– – ODL – –	ODL	OVERFLOW ROOF DRAIN PIPING
—— ODL ——	ODL	OVERFLOW ROOF DRAIN PIPING (ABOVE GRADE)
—— CD ——	CD	CONDENSATE DRAIN PIPING
—— TW ——	TW	TEMPERED WATER (105° F)
– – TP – –	TP	TRAP PRIMER WATER PIPING
—— G ——	G	GAS - LOW PRESSURE (7"-14" WC)
—— MPG ——	MPG	GAS - MEDIUM PRESSURE (2-3 PSI)
—— HPG ——	HPG	GAS - HIGH PRESSURE (5 PSI AND ABOVE)
—— LPG ——	LPG	GAS - LIQUIFIED PETROLEUM
—— CA ——	CA	COMPRESSED AIR PIPING

PLUMBING SYMBOLS AND LEGEND

SYMBOL	ABBREVIATION	DESCRIPTION
	BV	BALL VALVE
	CS	CIRCUIT SETTER OR FLOW CONTROL VALVE
	BFV	BUTTERFLY VALVE
	GV	GATE VALVE
	CHV	CHECK VALVE
	GLV	GLOBE VALVE
	ANV	ANGLE VALVE
	TDV	TRIPLE DUTY VALVE
	HB	HOSE BIB
	HV	3/4" HOSE END DRAIN VALVE
	BP	BACKFLOW PREVENTOR
	GPR	GAS PRESSURE REGULATOR
	STR	STRAINER
	STR	STRAINER WITH 3/4" HOSE END DRAIN VALVE
	PTR	PRESSURE - TEMPERATURE RELIEF VALVE
	RV	PRESSURE RELIEF VALVE
		2-WAY CONTROL VALVE
		3-WAY CONTROL VALVE
		UNION
		REDUCER
	WHA	WATER HAMMER ARRESTOR
	PG	PRESSURE GAGE WITH GAUGE COCK
	TH	THERMOMETER
	FCO/GCO	FLOOR OR GRADE CLEANOUT
	WCO	WALL CLEANOUT
	PD	PIPING TEE DOWN
	PU	PIPING TEE UP
	PU	PIPING ELBOW UP
	PD	PIPING ELBOW DOWN
		BRANCH - TOP CONNECTION
		BRANCH - BOTTOM CONNECTION
	COP	CAP ON END OF PIPE
		ARROW INDICATES DIRECTION OF EACH FLOW
	FLS	FLOOR SINK
	FD	FLOOR DRAIN
	VTR	PLUMBING VENT THRU ROOF

PLUMBING ANNOTATIONS

SYMBOL	ABBREVIATION	DESCRIPTION
RTU #		MECHANICAL EQUIPMENT - (SEE MECHANICAL SCHEDULE)
1 / M6.1		DETAIL REFERENCE CALLOUT, DETAIL NUMBER AND SHEET
1 / M3.1		SECTION VIEW CALLOUT, DETAIL NUMBER AND SHEET
	POC	POINT OF CONNECTION - NEW ITEMS TO EXISTING ITEMS
L-1		PLUMBING FIXTURE SCHEDULE - (SEE SCHEDULE)
?		SHEET NOTES
	AP	ACCESS PANEL

PLUMBING ABBREVIATIONS

ABBREVIATION	DESCRIPTION
ADA	AMERICANS WITH DISABILITIES ACT
AFF	ABOVE FINISHED FLOOR
AV	ACID VENT
AW	ACID WASTE
BFF	BELOW FINISHED FLOOR
BFG	BELOW FINISHED GRADE
BHP	BRAKE HORSE POWER
BOP	BOTTOM OF PIPE
BTU/H	BRITISH THERMAL UNIT PER HOUR
CO	CLEANOUT
CP	CONDENSATE PYMP
CPVC	CHLORINATED POLYVINLY CHLORIDE
CU	COPPER
(D)	DEMOLISHED
DIA	DIAMETER
DFU	DRAINAGE FIXTURE UNIT
DN	DOWN
(E)	EXISTING
EFF	EFFICIENCY
EWC	ELECTRIC WATER COOLER
EWT	ENTERING WATER TEMPERATURE
°F	DEGREES FAHRENHEIT
FLA	FULL LOAD AMPS
FPM	FEET PER MINUTE
GA	GAGE OR GAUGE
GAL	GALLONS
GI	GREASE INTERCEPTOR
GPF	GALLONS PER FLUSH
GPM	GALLONS PER MINUTE
HD	HEAD PRESSURE
HP	HORSEPOWER
IBC	INTERNATIONAL BUILDING CODE
IMC	INTERNATIONAL MECHANICAL CODE
IPC	INTERNATIONAL PLUMBING CODE
IE	INVERT ELEVATION BELOW FINISHED FLOOR
KW	KILOWATT
L	LAVATORY
LBS	POUNDS
LWT	LEAVING WATER TEMPERATURE
MAX	MAXIMUM
MBH	ONE THOUSAND BTUH
MCA	MINIMUM CIRCUIT AMPS
MIN	MINIMUM
MOCP	MAXIMUM OVER CURRENT PROTECTION
N/A	NOT APPLICABLE
N/C	NORMALLY CLOSED
N/O	NORMALLY OPEN
NEC	NATIONAL ELECTRIC CODE
NFPA	NATIONAL FIRE PROTECTION ASSOCIATION
NIS	NOT IN SCOPE
NTS	NOT TO SCALE
OFCI	OWNER FURNISHED, CONTRACTOR INSTALLED
PD	PRESSURE DROP
PRV	PRESSURE REDUCING VALVE
PSI	POUNDS PER SQUARE INCH
PVC	POLYVINYL CHLORIDE
RD	ROOF DRAIN
RPM	REVOLUTIONS PER MINUTE
S	SINK
SOI	SAND OIL INTERCEPTOR
SP	SUMP PUMP
SS	STAINLESS STEEL
TDH	TOTAL DYNAMIC HEAD
TFA	TO FLOOR ABOVE
TFB	TO FLOOR BELOW
TYP	TYPICAL
UBC	UNIFORM BUILDING CODE
UL	UNDERWRITERS LABORATORIES, INC.
UMC	UNIFORM MECHANICAL CODE
UNO	UNLESS NOTED OTHERWISE
UPC	UNIFORM PLUMBING CODE
VFD	VARIABLE FREQUENCY DRIVE
WC	WATER COLUMN
WG	WATER GAUGE
WSFU	WATER SUPPLY FIXTURE UNIT
WVS	WASTE VENT STACK

PLUMBING GENERAL NOTES:

1. PLUMBING WORK SHALL CONFORM WITH THE LATEST ADOPTED LOCAL CODES, ORDINANCES AND DESIGN REQUIREMENTS UNLESS OTHERWISE APPROVED BY THE AUTHORITY HAVING JURISDICTION (AHJ).
2. CONTRACTOR SHALL COORDINATE WITH STRUCTURAL REQUIREMENTS BEFORE DRILLING OR CUTTING ANY CMU WALLS, CEILING JOISTS OR STRUCTURAL ELEMENTS.
3. PLUMBING DRAWING ARE INHERENTLY DIAGRAMMATIC AND ONLY SERVE TO SHOW INTENT, SYSTEM CONNECTIONS, AND GENERAL ROUTING. THE CONTRACTOR IS RESPONSIBLE FOR ALL FOR ALL COMPONENTS FOR A COMPLETE OPERABLE AND CODE COMPLIANT SYSTEM.
4. CONTRACTOR TO PROVIDE ALL REQUIRED LABOR, MATERIALS, EQUIPMENT, AND INSURANCES TO COMPLETE THE DESIGN PER THE INTENT OF THE DRAWINGS AND SPECIFICATIONS TO THE SATISFACTION OF THE ENGINEER/ARCHITECT.
5. CONTRACTOR TO PROVIDE ALL REQUIRED PERMITS AND FEES TO COMPLETE THE PROJECT.
6. THESE DRAWINGS SHALL BE READ IN CONJUNCTION WITH DRAWINGS PROVIDED BY OTHER DISCIPLINES. CONSTRUCTION CONFLICTS ARE TO BE BROUGHT TO THE ATTENTION OF THE ENGINEER/ARCHITECT.
7. DUE TO THE SMALL SCALE OF THE DRAWINGS, IT IS NOT FEASIBLE TO SHOW ALL REQUIRED ROUTING, ELEVATIONS, ETC., IT IS THEREFORE THE CONTRACTORS RESPONSIBILITY TO VERIFY THE REQUIRED ROUTING, ELEVATION, AND PLACEMENT OF EQUIPMENT AND FIXTURES. DEVIATIONS ARE TO BE INSTALLED IN ACCORDANCE WITH CURRENT CODES AND THE SPECIFICATIONS TO MEET THE INTENT OF THE DESIGN.
8. ALL INFORMATION SHOWN ON SCHEDULES ARE BASED ON AVAILABLE PRODUCT INFORMATION AT THE TIME OF DESIGN.
9. THE CONTRACTOR SHALL KEEP INSTALLATION INSTRUCTIONS FOR ALL LISTED EQUIPMENT ON THIS PROJECT AT THE JOBSITE AND SHALL HAVE THEM ACCESSIBLE FOR THE FIELD INSPECTOR UPON REQUEST.
10. PROVIDED DRAWINGS BY THE ENGINEER DOES NOT RELIEVE THE CONTRACTOR OF THE RESPONSIBILITY TO PROVIDE AN INSTALLATION SUITABLE IN DIMENSION, CONSTRUCTION, FUNCTION AND FINISH FOR THE PURPOSE INTENDED.
11. ANY DISCREPANCIES DURING BID SHALL BE BROUGHT TO THE ATTENTION OF THE ENGINEER/ARCHITECT AND RESOLVED PRIOR TO FINALIZATION OF THE CONSTRUCTION CONTRACT.
12. THE CONTRACTOR SHALL BE RESPONSIBLE FOR THE COORDINATION OF ALL TRADE.
13. EXACT LOCATION OF ACCESS PANELS SHALL BE COORDINATED WITH FINAL PLACEMENT OF ALL VALVES, DAMPERS, AND ANY OTHER COMPONENT IDENTIFIED ON THE DRAWINGS.
14. CONTRACTOR SHALL PERFORM TESTING AND ADJUSTING AS REQUIRED FOR ALL EQUIPMENT AND/OR SYSTEMS WITHIN THIS SCOPE OF WORK PER THE SPECIFICATIONS.

APPLICABLE CODES:

2018 INTERNATIONAL BUILDING CODE (IBC)
2018 INTERNATIONAL ENERGY CONSERVATION CODE (IECC)
2018 INTERNATIONAL PLUMBING CODE (IPC)
2017 NATIONAL ELECTRIC CODE (NEC)
2018 INTERNATIONAL FIRE CODE (IFC)
2018 INTERNATIONAL MECHANICAL CODE (IMC)
2018 INTERNATIONAL FUEL GAS CODE (IFGC)

CONSTRUCTION DOCUMENTS

No.	REVISIONS	DATE	BY

Kimley»Horn
Sign of Quality

PROFESSIONAL ENGINEER
ALEXANDER ALFORD, P.E.
1982-E
U.S. VIRGIN ISLANDS
6/05/2026

KHA PROJECT	045826000
DATE	JUNE 2026
SCALE	AS SHOWN
DESIGNED BY	AAF
DRAWN BY	AAF
CHECKED BY	AA

PLUMBING NOTES AND LEGENDS

LBJ PUMP STATION
PREPARED FOR
VIWMA

SHEET NUMBER
P-01

This document, together with the concepts and designs presented herein, as an instrument of service, is intended only for the specific purpose and client for which it was prepared. Reuse of and improper reliance on this document without written authorization and adaptation by Kimley-Horn and Associates, Inc. shall be without liability to Kimley-Horn and Associates, Inc.

Autodesk Docs://045826000 - LBJ Pump Station Saint Croix R24/045826000 LBJ pump station Saint Croix MEP R24.rvt

PLUMBING FIXTURE SCHEDULE

MARK	FIXTURE TYPE	DESCRIPTION	MANUFACTURER	MODEL	ROUGH-IN SIZE			
					W	V	CW	HW
EE-1	EMERGENCY EYEWASH SHOWER	COMBINATION EMERGENCY EYEWASH AND SHOWER. STAINLESS STEEL, FLOOR MOUNTED. 20 GPM FLOW CONTROL SHOWERHEAD.	HAWS	8330	1 1/4"	1 1/4"	1 1/4"	0"
FCO-1	FLOOR CLEANOUT	FLOOR CLEANOUT, REFER TO PLANS FOR SIZE. LOCATE IN ACCESSIBLE AREA. TUF-TOP NON-ADJUSTABLE CLEANOUT WITH DURA-COATED CAST IRON BODY, WITH GAS AND WATERTIGHT ABS TAPERED THREAD PLUG, AND ROUND SCORIATED CAST IRON HEAVY-DUTY SECURED COVER AND FRAME.	WATTS	CO-1200-R	2"	0"	0"	0"
FD-1	2" FLOOR DRAIN	CAST IRON BODY FLOOR DRAIN. PROVIDE WITH FLASHING CLAMP, 6" ROUND ADJUSTABLE NICKEL BRONZE STRAINER, 2" NO HUB OUTLET AND 1/2" TRAP PRIMER CONNECTION.	ZURN	FD1	2"	1 1/2"	0"	0"
FS-1	2" FLOOR SINK	12-1/2" X 12-1/2" X 6" DEEP CAST IRON FLANGED FLOOR SINK. PROVIDE WITH ALUMINUM DOME BOTTOM STRAINER, NICKLE BRONZE RIM WITH 3/4 SECURED GRATE, 2" NO HUB OUTLET, SEEPAGE HOLES, AND ACID RESISTANT COATED INTERIOR.	ZURN	Z-1900-2NH	2"	1 1/2"	0"	0"
L-1	LAVATORY	21"X20 1/4" SELF DRAINING DECK 4" CENTERS WALL MOUNTED LAVATORY, PROVIDE WITH AMERICAN STANDARD FAUCET MODEL 6053.204. FAUCET TO BE 0.35 GPM, BATTERY OPERATED SENSOR WITH ESTIMATED LIFE CYCLES OF 480,000 AND OPTIONAL THERMOSTATIC MIXING VALVE MODEL 605TXMV1070.	AMERICAN STANDARD	DECORUM 9134004EC	1 1/2"	1 1/2"	1/2"	1/2"
MS-1	MOP SINK	FLOOR MOUNTED 24"X24"X10" DEEP MOP SINK. ONE PIECE MOLDED STRUCTURAL FIBERGLASS CONSTRUCTION WITH MARBELIZED WHITE FINISH. PROVIDE WITH FAUCET (MODEL 63.600A), 31" HOSE AND HOSE HOLDER (MODEL 65.700), MOP HANGER (65.600), BUMPER GUARDS, AND WALL GUARDS. PROVIDE MOP SINK WITH 3" INTEGRAL DRAIN WITH REMOVEABLE STAINLESS STEEL STRAINER.	FIAT	MSB-2424	2"	2"	1/2"	1/2"
SH-1	SHOWER TRIM KIT	1.75 GPM SHOWER TRIM KIT WITH WATER SAVING SHOWERHEAD, DOUBLE CERAMIC PRESSURE BALANCE CARTRIDGE WITH LEVER HANDLE.	AMERICAN STANDARD	TOWNSEND TU353507.002	0"	0"	1/2"	1/2"
SK-1	SINK - SINGLE BOWL	18 GAUGE 304 STAINLESS STEEL SINGLE BOWL DROPIN SINK, 25" X 22" X 6-1/2" DEEP. BARRIER FREE ADA COMPLIANT. PROVIDE WITH 3-HOLE PUNCH CONFIGURATION ON 4" CENTERS. PROVIDE 1.5 GPM CHICAGO FAUCET WITH 8" FIXED CENTERS, 4" VANDLE PROOF WRISTBLADE HANDLES, AND 8" L-TYPE DWING SPOUT (MODEL NO. 201-AL8E35-317AB). PROVIDE ASSE 1070 COMPLIANT THERMOSTATIC MIXING VALVE, TRUEBRO LAVGUARDS, 1-1/2" CHROME PLATED P-TRAP, GRID STRAINER, LEAD FREE QUARTER TURN VALVES, AND FLEXIBLE SUPPLY LINES.	ELKAY	LRAD252265PD	2"	1 1/2"	1/2"	1/2"
TP-1	TRAP PRIMER	TRAP PRIMER ASSEMBLY. AUTOMATICALLY ACTIVATED WHEN SENSING 10 PSI DROP, PRIMES UP TO TWO P TRAPS. OPERATING RANGE BETWEEN 20 AND 80 PSI.	WATTS	LFTP300T	0"	0"	1/2"	0"
WC-1	WATER CLOSET - FLUSH TANK - PUBLIC	FLOOR MOUNTED WATER CLOSET, 1.6 GPF.	AMERICAN STANDARD	CADET 2467016.020	4"	2"	1/2"	0"

WATER HEATER SCHEDULE

NOTES:
1. FLOWS BASED ON A GROUNDWATER TEMPERATURE OF 78°F.
2. PROVIDE WITH EXPANSION TANK, AMTROL MODEL ST-5

MARK	EQUIPMENT TYPE	LOCATION	GALLON CAPACITY	TEMPERATURE RISE (°F)	ELECTRICAL				MANUFACTURER	MODEL	NOTES
					INPUT (KW)	VOLTAGE	PHASE	HZ			
WH-1	TANK TYPE - ELECTRIC	MECH ROOM 108	6.0	62 °F	2.5	208 V	3	60 Hz	A.O. SMITH	DEL-6S-2.5	1,2

PIPE SCHEDULE (FLUSH TANK)

PIPE SIZE	GPM	SFU
1/2"	0-2	-
3/4"	3-5	0-2
1"	6-12	3-7
1-1/4"	13-20	8-20
1-1/2"	21-32	21-60
2"	33-65	61-200

BASED ON 3.65 PSI ALLOWABLE LOSS CALCULATIONS THIS SHEET, APPLIED TO 2012 IPC APPENDIX E FIGURE E103.3(3) AND TABLE E103.3(3).

PLUMBING PIPE MATERIAL SCHEDULE

NOTES:
1. INSULATE HW/ HWC AND TW / TWC PIPING PER SPECIFICATIONS. INSULATION THICKNESS SHALL EQUAL PIPE DIAMETER UP TO 2". FOR PIPE LARGER THAN 2" DIAMETER, MINIMUM INSULATION WALL THICKNESS IS 2".

PIPE SYSTEM	PIPE TAG	PIPE SIZE	MATERIAL	FITTINGS	INSULATION THICKNESS
DOMESTIC COLD WATER	CW	1/2" TO 1-1/4"	SCH. 40 PVC	SOCKET FITTINGS	1/2"
		1-1/2" TO 4"		SOCKET FITTINGS	1"
DOMESTIC HOT WATER	HW / HWC	1/2" TO 1-1/4"		SOCKET FITTINGS	(SEE NOTE 1)
		1-1/2" TO 4"		SOCKET FITTINGS	(SEE NOTE 1)
DOMESTIC TEPID WATER	TW / TWC	1/2" TO 1-1/4"		SOCKET FITTINGS	(SEE NOTE 1)
		1-1/2" TO 4"		SOCKET FITTINGS	(SEE NOTE 1)
SANITARY WASTE	W	ALL	SCH. 40 PVC	SOCKET FITTINGS	-
VENT	V	ALL	SCH. 40 PVC	SOCKET FITTINGS	-
CONDENSATE DRAIN	CD	ALL	TYPE K COPPER	SOLDER	-

CONSTRUCTION DOCUMENTS

No.	REVISIONS	DATE	BY

Kimley»Horn
Sign of Quality®

PROFESSIONAL ENGINEER
ALEXANDER ALFORD, P.E.
1982-E
U.S. VIRGIN ISLANDS
06/01/2026

KHA PROJECT 045826000
DATE JUNE 2026
SCALE AS SHOWN
DESIGNED BY AAF
DRAWN BY AAF
CHECKED BY AA

PLUMBING SCHEDULES AND CALCULATIONS

LBJ PUMP STATION
PREPARED FOR
VIWMA

SHEET NUMBER
P-02

This document, together with the concepts and designs presented herein, as an instrument of service, is intended only for the specific purpose and client for which it was prepared. Reuse of and improper reliance on this document without written authorization and adaptation by Kimley-Horn and Associates, Inc. shall be without liability to Kimley-Horn and Associates, Inc.

Autodesk Docs://045826000 - LBJ Pump Station Saint Croix P24/045826000 LBJ pump station Saint Croix MEP P24.rvt

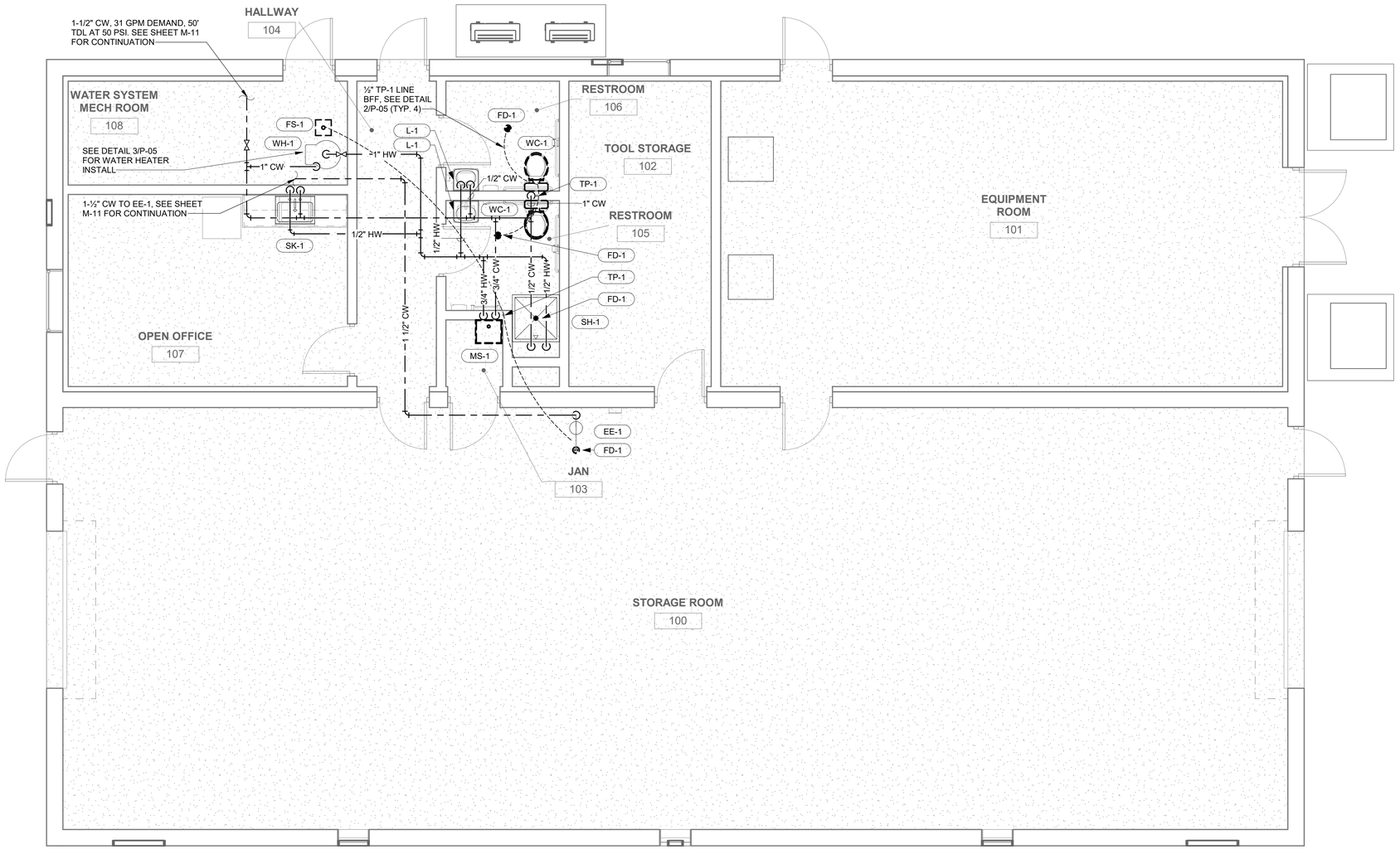

1 PLUMBING FLOOR PLAN - DOMESTIC WATER

1/4" = 1'-0"

CONSTRUCTION DOCUMENTS

No.	REVISIONS	DATE	BY

Kimley»Horn

Sign of Quality

PROFESSIONAL ENGINEER
ALEXANDER ALFORD, P.E.
1982-E
U.S. VIRGIN ISLANDS
06/01/2026

KHA PROJECT 045926000

DATE JUNE 2026

SCALE AS SHOWN

DESIGNED BY AAF

DRAWN BY AAF

CHECKED BY AA

PLUMBING FLOOR PLAN - DOMESTIC WATER

LBJ PUMP STATION
PREPARED FOR VIWMA

SHEET NUMBER
P-03

This document, together with the concepts and designs presented herein, as an instrument of service, is intended only for the specific purpose and client for which it was prepared. Reuse of and improper reliance on this document without written authorization and adaptation by Kimley-Horn and Associates, Inc. shall be without liability to Kimley-Horn and Associates, Inc.

Autodesk Docs://045926000 - LBJ Pump Station Saint Croix R24/045926000 LBJ pump station Saint Croix MEP R24.rvt

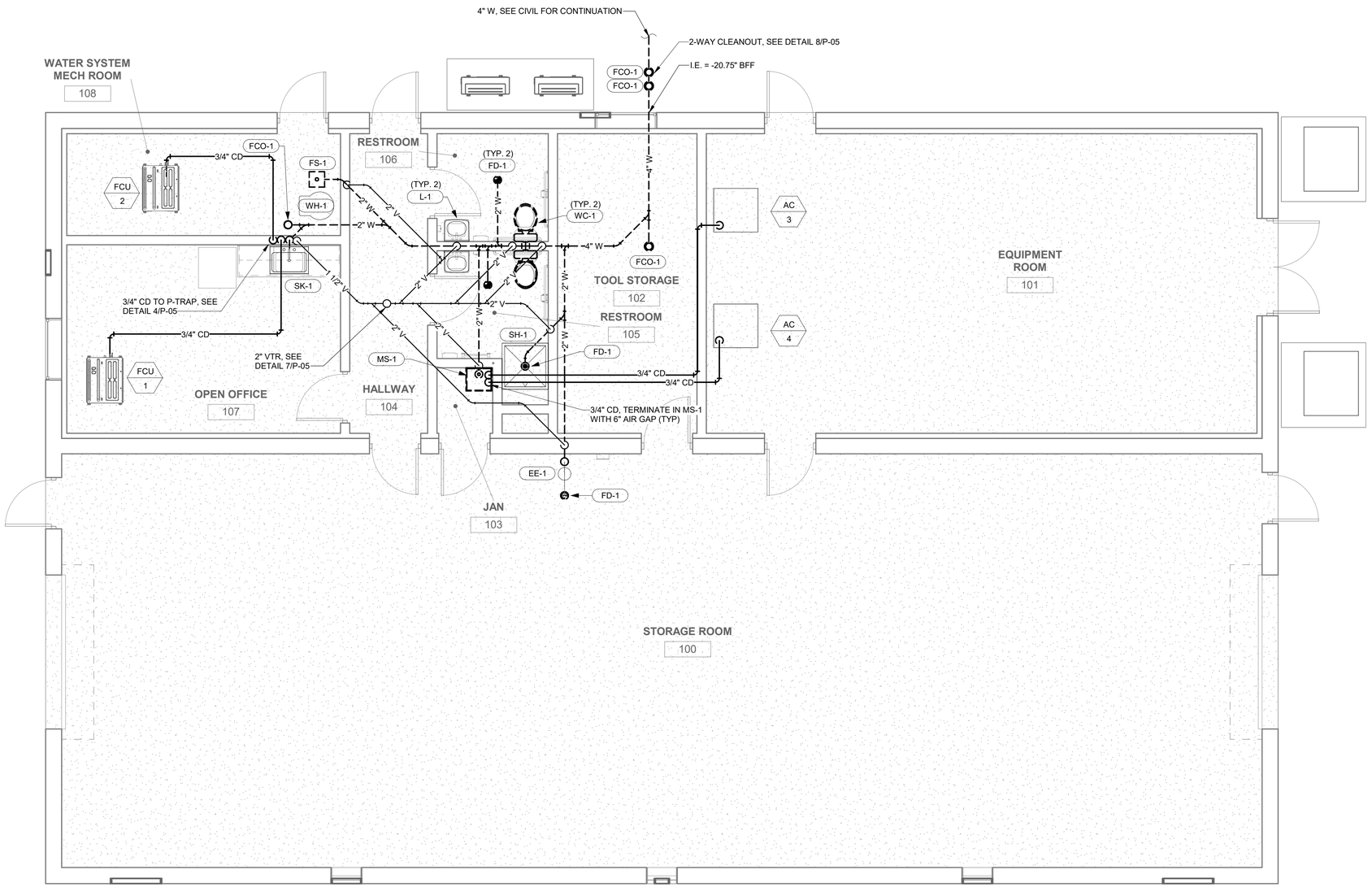

1 PLUMBING FLOOR PLAN - WASTE AND VENT

1/4" = 1'-0"

CONSTRUCTION DOCUMENTS

No.	REVISIONS	DATE	BY

Kimley»Horn

Sign of Quality®

PROFESSIONAL ENGINEER
ALEXANDER ALFORD, P.E.
1982-E
U.S. VIRGIN ISLANDS
12/05/2026

KHA PROJECT 045826000

DATE JUNE 2026

SCALE AS SHOWN

DESIGNED BY AAF

DRAWN BY AAF

CHECKED BY AA

PLUMBING FLOOR PLAN - WASTE AND VENT

LBJ PUMP STATION
PREPARED FOR
VIWMA

SHEET NUMBER
P-04

This document, together with the concepts and designs presented herein, as an instrument of service, is intended only for the specific purpose and client for which it was prepared. Reuse of and improper reliance on this document without written authorization and adaptation by Kimley-Horn and Associates, Inc. shall be without liability to Kimley-Horn and Associates, Inc.

Autodesk Docs://045826000 - LBJ Pump Station Saint Croix P24/045826000 LBJ pump station Saint Croix MEP_R24.rvt

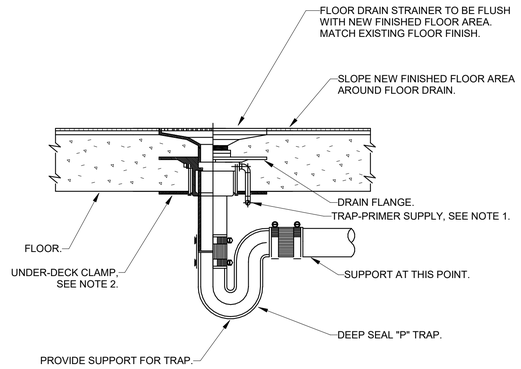

NOTES:

1. FOR TRAP-PRIMER REQUIREMENTS REF. PLAN DWG'S AND SPECIFICATIONS.
2. PROVIDE UNDER DECK CLAMP ON THIS SLAB INSTALLATIONS OF 5" OR LESS. SECURE CLAMP TO DRAIN, REF. SPECIFICATIONS.
3. NO-HUB FOR ABOVE GRADE INSTALLATION.

1 FLOOR DRAIN

N.T.S

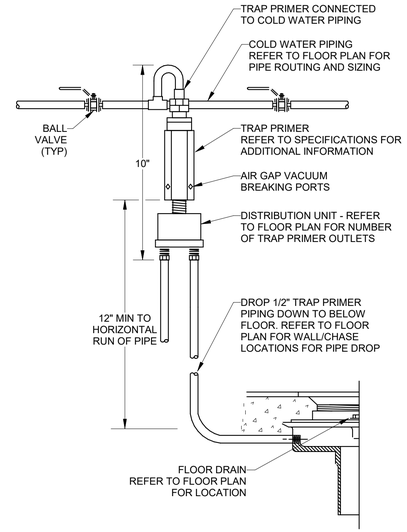

2 TRAP PRIMER

N.T.S

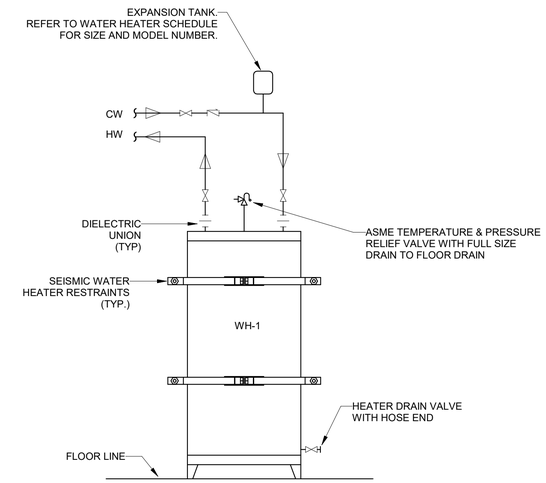

NOTES:

1. WATER HEATER STRAPPING SHALL BE AT POINTS WITHIN THE UPPER ONE-THIRD AND LOWER ONE-THIRD (1/3) OF ITS VERTICAL DIMENSIONS. A MINIMUM (1/3) DISTANCE OF FOUR (4) INCHES SHALL BE MAINTAINED ABOVE CONTROLS WITH THE STRAPPING.

3 ELECTRIC WATER HEATER

N.T.S

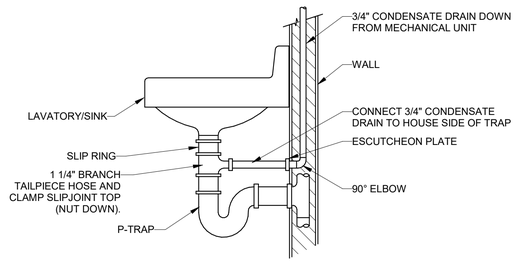

4 CONDENSATE DRAIN TO P-TRAP DETAIL

N.T.S

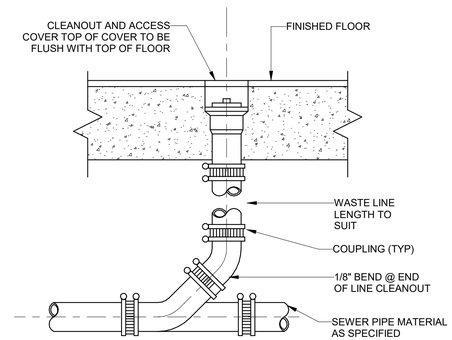

5 FLOOR CLEANOUT

N.T.S

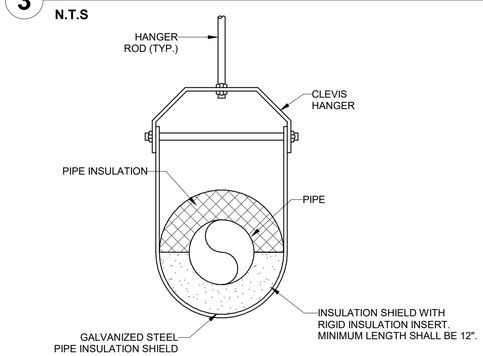

6 PIPE HANGER FOR INSULATED PIPE

N.T.S

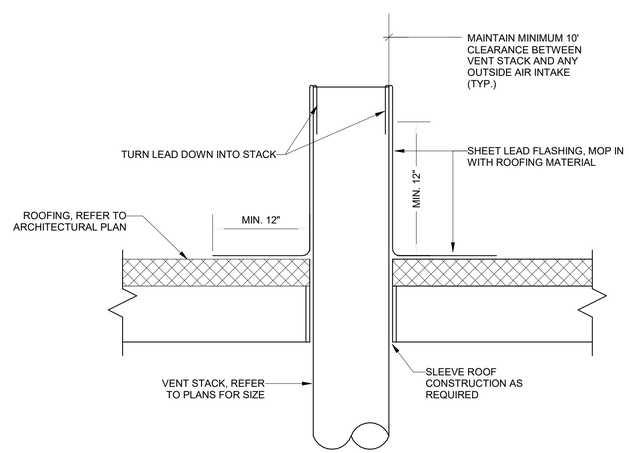

7 VENT THROUGH ROOF

N.T.S

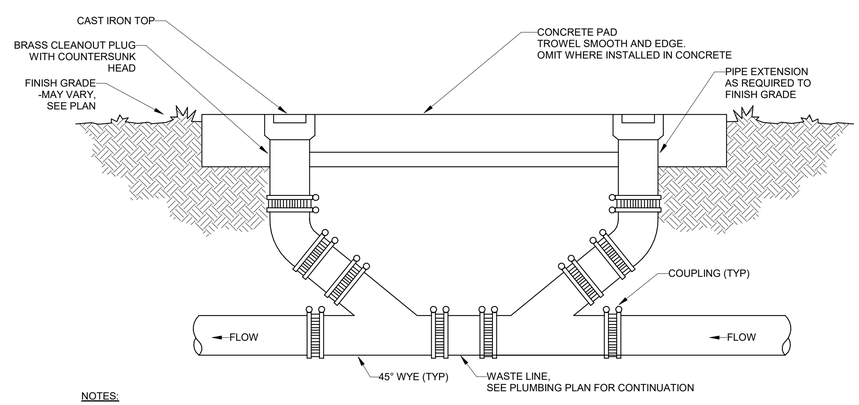

NOTES:

1. ALL CLEANOUT LOCATIONS SHALL BE INSTALLED IN ACCESSIBLE LOCATIONS.
2. CONTRACTOR SHALL VERIFY ALL CLEANOUT LOCATIONS WITH ARCHITECT PRIOR TO INSTALLATION.

8 TYPICAL TWO WAY CLEANOUT

N.T.S

CONSTRUCTION DOCUMENTS

No.	REVISIONS	DATE	BY

Kimley»Horn

Sign of Quality

PROFESSIONAL ENGINEER
ALEXANDER ALFORD, P.E.
1982-E
U.S. VIRGIN ISLANDS
06/05/2026

KHA PROJECT 045826000
DATE JUNE 2026
SCALE AS SHOWN
DESIGNED BY AAF
DRAWN BY AAF
CHECKED BY AA

PLUMBING DETAILS

LBJ PUMP STATION
PREPARED FOR
VIWMA

SHEET NUMBER
P-05

This document, together with the concepts and designs presented herein, as an instrument of service, is intended only for the specific purpose and client for which it was prepared. Reuse of and improper reliance on this document without written authorization and adaptation by Kimley-Horn and Associates, Inc. shall be without liability to Kimley-Horn and Associates, Inc.

Autodesk Docs://045826000 - LBJ Pump Station Saint Croix/P24/045826000 LBJ pump station Saint Croix MEP R24.rvt

CONDUIT AND RACEWAY

	CONDUIT RUN IN OR ON CEILING OR WALL.
	CONDUIT RUN IN FLOOR, UNDER FLOOR, OR UNDERGROUND.
	MARKS INDICATE QTY OF CONDUCTORS IN CONDUIT EXCLUDING GROUND. NO MARKS INDICATE (2) CONDUCTORS. ADD GROUND PER NEC FOR EMT & NON-METALLIC CONDUIT.
	LONG MARK INDICATES GROUND FOR ISOLATED GROUNDING SYSTEM. SIZE PER NEC.
	BRANCH CIRCUIT (DIAGRAMMATIC)
LA-1	HOMERUN INDICATING PANEL AND CIRCUIT NUMBER.
LA-[1,3,5]	HOMERUN WITH CIRCUIT NUMBER IN BRACKETS INDICATING MULTI-PHASE LOAD.
ON HA-1	"ON" INDICATES CIRCUITING SPLIT AT DIFFERENT LOCATIONS
	CONDUIT DOWN.
	CONDUIT UP.
	CONDUIT STUB AND CAP.

EQUIPMENT

$_M$	MOTOR RATED SWITCH
$_{HOA}$	MOTOR RATED HAND-OFF-AUTO SWITCH
	EMERGENCY POWER OFF SWITCH, MUSHROOM TYPE
	DISCONNECT, HEAVY DUTY, NON-FUSIBLE
	DISCONNECT, HEAVY DUTY, FUSIBLE
	MAGNETIC MOTOR STARTER
	COMBINATION MOTOR STARTER & DISCONNECT
VFD	VARIABLE FREQUENCY DRIVE
WALL	ELECTRICAL PANEL, SURFACE MOUNTED
WALL	ELECTRICAL PANEL, FLUSH MOUNTED
T	TRANSFORMER
DP	DISTRIBUTION PANELBOARD
WALL	INVERTER
WH-1 AC1	EQUIPMENT CALLOUT
WALL	AUXILIARY SYSTEM CABINET

ONELINE

M	POWER METER
	CURRENT TRANSFORMER
M	CURRENT TRANSFORMER + POWER METER
	CIRCUIT BREAKER
	DRAWOUT POWER CIRCUIT BREAKER
LSI	BREAKER WITH GFI PROTECTION, "LSI" INDICATES TRIP SETTINGS LONG, SHORT, & INSTANTANEOUS
	GROUND
GND	GROUND BUSBAR
NEUT	NEUTRAL BUSBAR
	TRANSFORMER PAD MOUNTED
	ATS
	PANELBOARD

POWER DEVICES

X X	DUPLEX RECEPTACLE, 20A, 125V, 2P, 3W. SLASH INDICATES MOUNTING ABOVE FINISH COUNTER.
X X	QUAD CONVENIENCE OUTLET, ABOVE COUNTER HEIGHT. SLASH INDICATES MOUNTING ABOVE FINISH COUNTER.
X X	DUPLEX CONVENIENCE OUTLET W/ GROUND FAULT CIRCUIT INTERRUPTER. SLASH INDICATES MOUNTING ABOVE FINISH COUNTER.
X X	SWITCHED DUPLEX CONVENIENCE OUTLET. SLASH INDICATES MOUNTING ABOVE FINISH COUNTER.
X X	DUPLEX CONVENIENCE OUTLET ON EMERGENCY POWER. SLASH INDICATES MOUNTING ABOVE FINISH COUNTER.
X X	DOUBLE DUPLEX CONVENIENCE OUTLET ON EMERGENCY POWER. SLASH INDICATES MOUNTING ABOVE FINISH COUNTER.
X X	DUPLEX/QUAD CONVENIENCE OUTLET, CEILING MOUNTED.
X X	DUPLEX/QUAD CONVENIENCE OUTLET, FLOOR MOUNTED. TYPE PER SUBSCRIPT.
X X	SPECIAL PURPOSE OUTLET, NEMA CONFIGURATION AND VOLTAGE AS NOTED. COORDINATE RECEPTACLE TYPE WITH ACTUAL EQUIPMENT PRIOR TO INSTALLATION.
J X	JUNCTION BOX, SPECIFIC USE AS NOTED.
TV	POWER/DATA BOX FOR USE WITH TV. WALL MOUNTED +60" AFF UNO
PD	POWER/DATA RECESSED FLOOR MOUNTED BOX. TYPE PER SUBSCRIPT.

RECEPTACLE TYPE DESIGNATION LEGEND

X = TYPE
- IG = ISOLATED GROUND
- OC = OCCUPANCY CONTROLLED
- USB = USB-A/USB-C DUPLEX
- WP = WEATHERPROOF, GFCI W/ WHILE-IN-USE COVER
- TV = TELEVISION, MOUNTING HEIGHT @ +60" AFF U.N.O.

X = TYPE
- FB1 = FLOORBOX, WIREMOLD RFB-4-OG
- FB2 = FLOORBOX, WIREMOLD RFB-6
- FB3 = FLOORBOX, WIREMOLD RFB-10

- PT1 = POKE-THRU, WIREMOLD 4AT
- PT2 = POKE-THRU, WIREMOLD 6AT
- PT3 = POKE-THRU, WIREMOLD 8AT

TELECOMMUNICATION DEVICES

#	DATA OUTLET (411 JUNCTION BOX WITH 1-1/4" C. STUBBED OUT 6" AFC.)
#	TELEPHONE OUTLET
#	DATA OUTLET, CEILING MOUNTED
CCTV	CCTV CAMERA. 1"C
CR	CARD READER. 1"C
#	DATA OUTLET, FLOOR MOUNTED, COORDINATE LOCATION WITH POWER.
WAP	WIRELESS ACCESS POINT (WAP)

TELECOMMUNICATION DEVICE TYPE DESIGNATION LEGEND

X = TYPE, # = NUMBER OF DATA DROPS
- FB1 = FLOORBOX, WIREMOLD RFB-4-OG
- FB2 = FLOORBOX, WIREMOLD RFB-6
- FB3 = FLOORBOX, WIREMOLD RFB-10

- PT1 = POKE-THRU, WIREMOLD 4AT
- PT2 = POKE-THRU, WIREMOLD 6AT
- PT3 = POKE-THRU, WIREMOLD 8AT

LIGHTING FIXTURES

L#	LIGHTING FIXTURE TAG, INDICATING FIXTURE ID.
	RECESSED MOUNTED LIGHT FIXTURE
	SURFACE MOUNTED LIGHT FIXTURE
	WALL MOUNTED LIGHT FIXTURE
	PENDANT/SUSPENDED MOUNTED LIGHT FIXTURE
	RECESSED MOUNTED LINEAR LIGHT FIXTURE
	RECESSED MOUNTED DOWN LIGHT
	TRACK AND TRACK LIGHT FIXTURE
	EXIT SIGN, SINGLE FACE, UNSWITCHED. ARROWS INDICATE PATH OF EGRESS. REFER TO ARCHITECTURAL PLANS FOR MOUNTING.
	EXIT SIGN, DOUBLE FACE, UNSWITCHED. ARROWS INDICATE PATH OF EGRESS. REFER TO ARCHITECTURAL PLANS FOR MOUNTING.
	UL924 EMERGENCY LIGHTING UNIT. REFER TO ARCHITECTURAL PLANS FOR MOUNTING.

LIGHTING DESIGNATION LEGEND

- UNSHADED REGION DESIGNATES LIGHT FIXTURE FOR NORMAL OPERATION
- SHADED REGION DESIGNATES LIGHT FIXTURE FOR EMERGENCY / LIFE SAFETY OPERATION
- HALF SHADED REGION DESIGNATES SWITCHED LIGHT FIXTURE FOR CRITICAL OPERATION

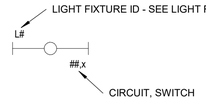

TAG	DESCRIPTION
EM	EMERGENCY
L	LED
NL	NIGHT LIGHT (UNSWITCHED)
S	SITE LIGHTING
X	EXIT LIGHT

LIGHTING CONTROLS

$	LINE VOLTAGE LIGHT SWITCH, SINGLE POLE
$_{X,Y}	LIGHT SWITCH, X=TYPE DEFINITION (SEE BELOW)
OS Z,Y OS Z,Y	OCCUPANCY SENSOR, DUAL TECHNOLOGY, WALL/CEILING
PC Z,Y PC Z,Y	PHOTOELECTRIC SENSOR, WALL/CEILING
UL924	UL924 EMERGENCY CONTROL DEVICE.

TYPE DEFINITION:

X=TYPE DEFINITION

- BLANK = SINGLE POLE
- 3 = THREE-WAY SWITCH
- 4 = FOUR-WAY SWITCH
- D = DIMMER SWITCH
- I = INDICATOR SWITCH
- K = KEYED SWITCH
- P = PILOT LIGHT SWITCH
- T = TIMER SWITCH
- M = MOTOR RATED
- LV = LOW-VOLTAGE SWITCH
- O = OCCUPANCY SENSOR, DT

SENSOR TYPE DEFINITION:

Z = SENSOR TYPE DESIGNATION

- DT = DUAL TECHNOLOGY
- PIR = PASSIVE INFRARED
- U = ULTRASONIC

FIRE ALARM

S	SMOKE DETECTOR, LOW VOLTAGE.
S D	DUCT SMOKE DETECTOR. COORDINATE MOUNTING TO BE INSTALLED IN RETURN DUCT OF ASSOCIATED UNIT.
S	SMOKE/CO DETECTOR, RESIDENTIAL, LINE VOLTAGE.
	HEAT DETECTOR.
	FIRE STROBE, CEILING MOUNTED. WHITE FINISH.
	FIRE HORN STROBE, CEILING MOUNTED.
	FIRE LOUDSPEAKER, CEILING MOUNTED.
	FIRE STROBE, WALL MOUNTED AT +84" AFF. WHITE FINISH.
	FIRE HORN STROBE, WALL MOUNTED AT +84" AFF. WHITE FINISH.
WALL	FIRE ALARM CONTROL PANEL, SURFACE MOUNTED.

ELECTRICAL SHEET LIST

SHEET NUMBER	SHEET NAME
EB-01	BUILDING ELECTRICAL SYMBOLS
EB-02	BUILDING ELECTRICAL ABBREVIATIONS AND NOTES
EB-03	ELECTRICAL GATE SITE PLAN
EB-04	BUILDING ELECTRICAL FLOOR PLAN - POWER & LOW VOLTAGE
EB-05	BUILDING ELECTRICAL REFLECTED CEILING PLAN
EB-06	BUILDING ELECTRICAL FLOOR PLAN - FIRE ALARM
EB-07	BUILDING ELECTRICAL SCHEDULES
EB-08	BUILDING ELECTRICAL SINGLE LINE DIAGRAM
EB-09	BUILDING ELECTRICAL DETAILS
EB-10	BUILDING ELECTRICAL DETAILS

CONSTRUCTION DOCUMENTS

No.	REVISIONS	DATE	BY

Kimley»Horn

Sign of Quality®

PROFESSIONAL ENGINEER
PETER SYNTAX
0-063343-1B
U.S. VIRGIN ISLANDS

KHA PROJECT 045826000

DATE JUNE 2026

SCALE AS SHOWN

DESIGNED BY SG

DRAWN BY SG

CHECKED BY PS

BUILDING ELECTRICAL SYMBOLS

LBJ PUMP STATION
PREPARED FOR
VIWMA

SHEET NUMBER
EB-01

This document, together with the concepts and designs presented herein, as an instrument of service, is intended only for the specific purpose and client for which it was prepared. Reuse of and improper reliance on this document without written authorization and adaptation by Kimley-Horn and Associates, Inc. shall be without liability to Kimley-Horn and Associates, Inc.

Autodesk Docs://045826000 - LBJ Pump Station Saint Croix R24/045826000 LBJ pump station Saint Croix_MEP_R24.rvt

MOUNTING HEIGHTS

WALL SWITCHES	3'-10" AFF
RECEPTACLES	1'-6" AFF
TELECOMMUNICATIONS OUTLETS	1'-6" AFF
TELECOMMUNICATIONS OUTLETS - WALL PHONE	4'-6" AFF
CLOCK OUTLETS	7'-6" AFF
TV OUTLETS	5'-0" AFF
PUSHBUTTONS	3'-10" AFF
DISCONNECT SWITCHES	5'-6" AFF
MOTOR STARTERS	5'-6" AFF
PANELS & CABINETS	6'-0" TO TOP
VOLUME CONTROLS	4'-0" AFF
NURSE CALL STATIONS	4'-0" AFF
NURSE CALL DOME LIGHTS	7'-6" AFF
DIMMERS	4'-0" AFF
INDIVIDUAL CIRCUIT BREAKERS	5'-6" TO TOP
ACCESS CONTROL DEVICES	3'-10" AFF
VANITY LIGHT IN TOILET ROOM	6" ABOVE THE MIRROR
INTERCOM	4'-6" AFF
FIREMAN'S PHONE	4'-6" AFF
FIRE ALARM - PULL STATIONS	4'-0" AFF
FIRE ALARM DEVICES HORN/SPEAKERS/STROBES (MOUNTING HEIGHT AT THE BOTTOM OF THE FIRE ALARM DEVICE OR 6" BELOW CEILING WHICH IS LOWER)	BETWEEN +80" AND 96"AFF

MOUNTING HEIGHT NOTES:

1. ALL ELEVATIONS ARE TO CENTER LINE OF DEVICE, UNLESS OTHERWISE NOTED.
2. REFER TO EQUIPMENT ELEVATION DRAWINGS FOR COORDINATION WITH CASEWORK.
3. MOUNT MANUAL MOTOR STARTER ADJACENT TO OR ON UNIT. MAINTAIN NEC WORKING CLEARANCE.
4. REFER TO ARCHITECTURAL ELEVATIONS FOR ADDITIONAL MOUNTING HEIGHTS.

BRANCH CIRCUIT SCHEDULE

BRANCH CIRCUIT	BREAKER SIZE	WIRE	CONDUIT
SINGLE POLE - SINGLE PHASE	20A-1P	2#10+1#10G	3/4"C
	30A-1P	2#10+1#10G	3/4"C
	40A-1P	2#8+1#10G	3/4"C
	50A-1P	2#6+1#10G	3/4"C
	60A-1P	2#4+1#10G	1 1/4"C
TWO POLE - SINGLE PHASE	20A-2P	2#12+1#12G	3/4"C
	30A-2P	2#10+1#10G	3/4"C
	40A-2P	2#8+1#10G	3/4"C
	50A-2P	2#6+1#10G	3/4"C
	60A-2P	2#4+1#10G	1 1/4"C
TWO POLE - SINGLE PHASE WITH NEUTRAL	20A-2P	3#12+1#12G	3/4"C
	30A-2P	3#10+1#10G	3/4"C
	40A-2P	3#8+1#10G	3/4"C
	50A-2P	3#6+1#10G	3/4"C
	60A-2P	3#4+1#10G	1 1/4"C
THREE POLE - THREE PHASE	20A-3P	3#12+1#12G	3/4"C
	30A-3P	3#10+1#10G	3/4"C
	40A-3P	3#8+1#10G	3/4"C
	50A-3P	3#6+1#10G	3/4"C
	60A-3P	3#4+1#10G	1 1/4"C
THREE POLE - THREE PHASE 4-WIRE WITH NEUTRAL	20A-3P	4#12+1#12G	3/4"C
	30A-3P	4#10+1#10G	3/4"C
	40A-3P	4#8+1#10G	3/4"C
	50A-3P	4#6+1#10G	1"C
	60A-3P	4#4+1#10G	1 1/4"C

ELECTRICAL ABBREVIATIONS

ABBREVIATION	DESCRIPTION	ABBREVIATION	DESCRIPTION
A	AMPERES	MC	METAL CLAD
AC	ABOVE CEILING / ALTERNATING CURRENT	MCB	MAIN CIRCUIT BREAKER
ADO	AUTOMATIC DOOR OPENER	MCC	MOTOR CONTROL CENTER
AF	AMPERE FRAME	MCP	MOTOR CIRCUIT PROTECTOR
AFCI	ARC FAULT CIRCUIT INTERRUPTER	MGB	MAIN GROUNDING BUSBAR
AFF	ABOVE FINISHED FLOOR	MH	MANHOLE
AFG	ABOVE FINISHED GRADE	MLO	MAIN LUGS ONLY
AIC	AMP INTERRUPTING CAPACITY	MOP	MAXIMUM OVERCURRENT PROTECTION
ALT	ALTERNATE	MTD	MOUNTED
ARCH	ARCHITECTURAL	MTG	MOUNTING
AT	AMPERE TRIP	MTG HGT	MOUNTING HEIGHT
ATS	AUTOMATIC TRANSFER SWITCH	MTR	MOTOR / METER
BC	BARE COPPER	MV	MEDIUM VOLTAGE
BFC	BELOW FINISH CEILING	NA	NOT APPLICABLE
BFL	BELOW FLOOR LEVEL	NAC	NOTIFICATION APPLIANCE CIRCUIT
BLDG	BUILDING	NC	NORMALLY CLOSED
C	CONDUIT	NEC	NATIONAL ELECTRICAL CODE
CB	CIRCUIT BREAKER	NIC	NOT IN CONTRACT
CCTV	CLOSED CIRCUIT TELEVISION	NO	NORMALLY OPEN
CFCI	CONTRACTOR FURNISHED, CONTRACTOR INSTALLED	NTS	NOT TO SCALE
CKT	CIRCUIT	OC	ON CENTER
CLG	CEILING	OFCI	OWNER FURNISHED, CONTRACTOR INSTALLED
COMM	COMMUNICATIONS	OFOI	OWNER FURNISHED, OWNER INSTALLED
CORR	CORRIDOR	OSC	OVERHEAD SERVICE CARRIER
CSP	CEILING SERVICE PANEL	P	POLE
CT	CURRENT TRANSFORMER	PA	PUBLIC ADDRESS
DC	DIRECT CURRENT	PB	PULL BOX / PUSHBUTTON
DED	DEDICATED	PC	PHOTOCELL
DET	DETAIL	PDU	POWER DISTRIBUTION UNIT
DF	DRINKING FOUNTAIN	PF	POWER FACTOR
DIA	DIAMETER	PH	PHASE
DISC	DISCONNECT	PLBG	PLUMBING
DN	DOWN	PNL	PANEL
DP	DISTRIBUTION PANEL	PS	POWER SUPPLY
DS	DISCONNECT SWITCH	PT	POTENTIAL TRANSFORMER
EC	ELECTRICAL CONTRACTOR	PUE	PUBLIC UTILITY EASEMENT
EDB	ELECTRIC DUCT BANK	PWR	POWER
EGC	EQUIPMENT GROUND CONDUCTOR	R	RELOCATE
EGS	ENGINE GENERATOR SET	REC	RECESSED
EJ	EXPANSION JOINT	RECEP	RECEPTACLE
ELEC	ELECTRIC / ELECTRICAL	REF	REFRIGERATOR
EM	EMERGENCY	REL	RELOCATE
EMI	ELECTROMAGNETIC INTERFERENCE	REM	REMOVE
EMT	ELECTRICAL METALLIC TUBING	REQD	REQUIRED
EQUIP	EQUIPMENT	RMC	RIGID METAL CONDUIT
ETR	EXISTING TO REMAIN	SCCR	SHORT CIRCUIT CURRENT RATING
EWC	ELECTRIC WATER COOLER	SHT	SHEET
E	EXISTING TO REMAIN	SIG	SIGNAL
FA	FIRE ALARM	SIM	SIMILAR
FACP	FIRE ALARM CONTROL PANEL	SPD	SURGE PROTECTIVE DEVICE
FCU	FAN COIL UNIT	SPEC	SPECIFICATION
FDR	FEEDER	SS	SAFETY SWITCH
FDS	FUSED DISCONNECT SWITCH	SSBJ	SUPPLY SIDE BONDING JUMPER
FIXT	FIXTURE	SUSE	SUITABLE FOR SERVICE ENTRANCE
FLA	FULL LOAD AMPERES	SW	SWITCH
FLEX	FLEXIBLE	SWBD	SWITCHBOARD
FLR	FLOOR	SWGR	SWITCHGEAR
FP	FLAT PANEL	TEL	TELEPHONE
FS	FLOW SWITCH	TFA	TO FLOOR ABOVE
GC	GENERAL CONTRACTOR	TFB	TO FLOOR BELOW
GD	GARBAGE DISPOSER	TGB	TELECOMMUNICATIONS GROUNDING BUSBAR
GEN	GENERATOR	TMGB	TELECOMMUNICATIONS MAIN GROUNDING BUSBAR
GFCI	GROUND FAULT CIRCUIT INTERRUPTER	TS	TAMPER SWITCH / TIME SWITCH
GFI	GROUND FAULT INTERRUPTER	TV	TELEVISION
GFP	GROUND FAULT PROTECTION	TVSS	TRANSIENT VOLTAGE SURGE SUPPRESSOR
GND	GROUND	TVTC	TELEVISION TERMINAL CABINET
GTB	GROUND TERMINAL BOX	TYP	TYPICAL
HOA	HAND OFF AUTOMATIC	UC	UNDER COUNTER
HP	HORSE POWER	UG	UNDERGROUND
HV	HIGH VOLTAGE	UH	UNIT HEATER
IC	IRRIGATION CONTROLLER	UNO	UNLESS NOTED OTHERWISE
INV	INVERTER	UPS	UNINTERRUPTED POWER SUPPLY
J or JB	JUNCTION BOX	V	VOLTAGE
KV	KILOVOLT	VFD	VARIABLE FREQUENCY DRIVE
KVA	KILOVOLT-AMPERES	VP	VAPOR PROOF
KW	KILOWATTS	W	WIRE
KWH	KILOWATT HOURS	W/	WITH
LAN	LOCAL AREA NETWORK	WP	WEATHERPROOF
LED	LIGHT EMITTING DIODE	WT	WATER TIGHT
LI	LONG-TIME/INSTANTANEOUS	X	REMOVE
LSI	LONG-TIME/SHORT-TIME/ INSTANTANEOUS	XFMR	TRANSFORMER
LSIA	LONG-TIME/SHORT-TIME/ INSTANTANEOUS/GROUND ALARM	XP	EXPLOSION PROOF
LSIG	LONG-TIME/SHORT-TIME/ INSTANTANEOUS/GROUND		
LTG	LIGHTING		
LTS	LIGHTS		
LV	LOW VOLTAGE		

GENERAL NOTES

1. FURNISH ALL LABOR, MATERIALS, TOOLS, ACCESSORIES, ETC. REQUIRED FOR A COMPLETE WORKING ELECTRICAL SYSTEM.
2. ALL ELECTRICAL WORK SHALL COMPLY WITH ALL APPLICABLE STATE, COUNTY, AND LOCAL CODES AND ORDINANCES, AS WELL AS ALL CURRENT STANDARDS, CODES AND PRACTICES AS REQUIRED BY 2017 NEC, NEMA, ANSI, NFPA, UBC, UL, IEEE, AND UTILITY COMPANY STANDARDS.
3. ALL EQUIPMENT, MATERIALS, AND WORK SHOWN ARE NEW UNLESS SPECIFICALLY NOTED AS EXISTING OR NOTED OTHERWISE ON OTHER SHEETS.
4. VERIFY EXACT LOCATION OF ALL RECEPTACLES ABOVE OR ADJACENT TO COUNTERS, FIXTURES, MIRRORS OUTDOOR FIXTURES AND MOUNTING HEIGHTS AND LOCATIONS OF ALL FIXTURES AND BOXES WITH ARCHITECTURAL ELEVATIONS PRIOR TO ROUGH-IN. NO EXTRA COSTS WILL BE ALLOWED FOR FAILURE TO COMPLY.
5. ANY POWER OUTAGE OF ANY CIRCUIT SHALL BE APPROVED BY THE OWNER IN WRITING A MINIMUM OF TWO WEEKS PRIOR TO OUTAGE. ALL OUTAGES SHALL BE DONE EXACTLY WHEN DETERMINED BY THE OWNER AND DONE BEFORE OR AFTER WORKING HOURS AND ON WEEKENDS. NO SINGLE OUTAGE SHALL REQUIRE MORE THAN 4 HOURS. PROVIDE TEMPORARY POWER, HEAT AND COOLING AS REQUIRED DURING OUTAGE.
6. DUE TO THE REQUIREMENTS TO INTERFACE WITH EXISTING FACILITIES AND UTILITIES, IT IS REQUIRED THAT THE CONTRACTOR VISIT THE SITE TO DETERMINE EXISTING CONDITIONS PRIOR TO BID.
7. PRIOR TO PURCHASE OF ANY PANEL, PROTECTIVE DEVICES, SWITCH, STARTER, CONDUIT, WIRE, ETC., TO FEED ANY PIECE OF MECHANICAL EQUIPMENT, VERIFY THE VOLTAGE, PHASE, AND LOAD OF THAT ITEM IN THE FIELD AND/OR WITH THE PARTICULAR ENTITY INVOLVED IN FURNISHING THE ITEM SUCH THAT THE PROPER SIZE & RATING OF THE MATERIALS ARE PURCHASED. NO EXTRAS WILL BE ALLOWED FOR FAILURE TO COMPLY. THIS APPLIES TO ALL EQUIPMENT UNDER OTHER SECTIONS & BY THE OWNER.
8. ALL RECEPTACLES SHALL MATCH THE MALE PLUG CONNECTOR OF ALL EQUIPMENT PROVIDED. VERIFY PRIOR TO PURCHASE. SEE GENERAL NOTE 7.
9. PULL ROPES: PROVIDE 300 POUND PULL WIRE OR NYLON EQUIVALENT IN ALL INTERIOR EMPTY CONDUIT RUNS. PROVIDE 1/4" DIA NYLON PULL ROPE IN EACH EMPTY EXTERIOR CONDUIT OR DUCT.
10. COORDINATE WITH MECHANICAL CONTRACTOR TO AVOID CONFLICTS BETWEEN DUCT WORK, SUPPLY & EXHAUST DIFFUSERS, LIGHTING, SOUND SYSTEMS, AND FIRE ALARM SYSTEM FIXTURES.
11. ELECTRICAL CONTRACTOR SHALL GUARANTEE THE ELECTRICAL WORK TO BE FREE FROM DEFECTS IN MATERIALS AND WORKMANSHIP FOR A PERIOD OF TWO YEARS FROM DATE OF FINAL ACCEPTANCE.
12. VERIFY THE EXACT LOCATION AND ELEVATION OF ALL ELECTRICAL EQUIPMENT PRIOR TO ROUGH-IN. FINAL CONNECTIONS OF EQUIPMENT SHALL BE PER MANUFACTURERS APPROVED WIRING DIAGRAMS, DETAILS, AND INSTRUCTIONS. THE ELECTRICAL CONTRACTOR SHALL PROVIDE MATERIALS AND EQUIPMENT COMPATIBLE WITH EQUIPMENT ACTUALLY SUPPLIED.

    NOTE: COORDINATE LUMINAIRE LOCATIONS WITH ARCHITECTURAL REFLECTED CEILING PLANS.
13. ORDER AND/OR RELEASE ORDERED MATERIALS PROMPTLY AFTER SUBMITTAL APPROVAL. NO SUBSTITUTIONS OR ALTERNATE METHODS OF INSTALLATION WILL BE ACCEPTED FOR FAILURE TO ORDER MATERIALS IN A TIMELY FASHION.
14. OBTAIN WRITTEN APPROVAL FROM THE ENGINEER OF ALL SHOP DRAWINGS AND MANUFACTURERS DATA FOR PANEL BOARDS, TRANSFORMERS, WIRING DEVICES, ETC. BEFORE RELEASING ORDERED MATERIALS. SUBMITTAL DATA SHALL INDICATE THAT THE CONTRACTOR HAS REVIEWED THE INFORMATION THEREIN AND THAT THE PROPOSED EQUIPMENT WILL MEET THE PHYSICAL CONSTRAINTS AT THE JOB SITE. ANY SUBSTITUTIONS SHALL BE OF THE EQUIVALENT OR BETTER QUALITY THAN THE SPECIFIED COMPONENTS.
15. TYPE MC OR TYPE AC CABLE SHALL ONLY BE USED WITH THE SPECIFIC WRITTEN PERMISSION OF THE PROGRAM/PROJECT MANAGER. ENT TYPE CONDUIT IS NOT ALLOWED EXCEPT AS SPECIFIED FOR UNDERGROUND DUCTBANKS.
16. CONDUIT/CONDUCTOR RUNS SHOWN ARE DIAGRAMMATICAL ONLY. THE BEST FINAL CONDUIT ROUTING SHALL BE AS DETERMINED BY THE ELECTRICAL CONTRACTOR AT THE TIME OF CONSTRUCTION.
17. ALL WIRE SHALL BE COPPER. MINIMUM SIZE FOR POWER WIRING SHALL BE **#10** AWG STRANDED UNLESS OTHERWISE NOTED. MINIMUM SIZE FOR CONTROL WIRING SHALL BE #14 AWG.
18. PROVIDE ALL PANEL BOARDS WITH TYPED DIRECTORIES INSTALLED UNDER A CLEAR PLASTIC COVER. SUBMIT DIRECTORY INFORMATION TO THE **OWNER** FOR APPROVAL PRIOR TO FINALIZATION.
19. SERIES RATING OF UPSTREAM OR DOWNSTREAM CIRCUIT BREAKERS OR FUSES IS PROHIBITED. ONLY FULLY RATED SYSTEM COMPONENTS WILL BE ACCEPTED.
20. PROVIDE ALL TRENCHING, EXCAVATION, BACK FILLING, SHORING, PUMPING, COMP ACTION TEST ETC. THAT ARE REQUIRED FOR THE SCOPE OF ELECTRICAL WORK.
21. ALL PANEL BOARDS, SWITCHES, MOTOR STARTERS, AND SWITCHBOARD CIRCUIT BREAKERS SHALL HAVE ENGRAVED MICARTA NAMEPLATES.
22. ALL CIRCUITS THAT SHARE A NEUTRAL SHALL BE PROVIDED WITH MULTIPOLE BREAKER.
23. PROVIDE CIRCUIT BREAKER LOCK LOCKED IN THE 'ON' POSITION FOR ALL CIRCUITS SERVING EMERGENCY LIGHTING.
24. ALL ANALOG INSTRUMENTATION WIRING SHALL BE SHIELDED.
25. IN ADDITION TO SURFACE RACEWAY AND/OR FLOOR MOUNTED OUTLET BOXES AND POWER POLES INDICATED ON ELECTRICAL DRAWINGS, THE ELECTRICAL CONTRACTOR SHALL PROVIDE ALL CABLE TRAY AND FLUSH MOUNTED OUTLET BOXES/BACK BOXES AND ASSOCIATED CONDUIT FOR ALL TELECOMMUNICATIONS OUTLETS (INCLUDING PA/MASTER CLOCK/SOUND SYSTEMS, CATV/VIDEO SYSTEMS, AND SECURITY SYSTEMS) ON THIS PROJECT.

CONSTRUCTION DOCUMENTS

No.	REVISIONS	DATE	BY

Kimley»Horn
Sign of Quality®

PROFESSIONAL ENGINEER
PETER MARTIN SYNTAX
0-063343-1B
U.S. VIRGIN ISLANDS

KHA PROJECT 045826000
DATE JUNE 2026
SCALE AS SHOWN
DESIGNED BY SG
DRAWN BY SG
CHECKED BY PS

BUILDING ELECTRICAL ABBREVIATIONS AND NOTES

LBJ PUMP STATION
PREPARED FOR VIWMA

SHEET NUMBER
EB-02

This document, together with the concepts and designs presented herein, as an instrument of service, is intended only for the specific purpose and client for which it was prepared. Reuse of and improper reliance on this document without written authorization and adaptation by Kimley-Horn and Associates, Inc. shall be without liability to Kimley-Horn and Associates, Inc.

Autodesk Docs://045826000 - BJ Pump Station Saint Croix R24/045826000 - BJ pump station Saint Croix MEP R24.rvt

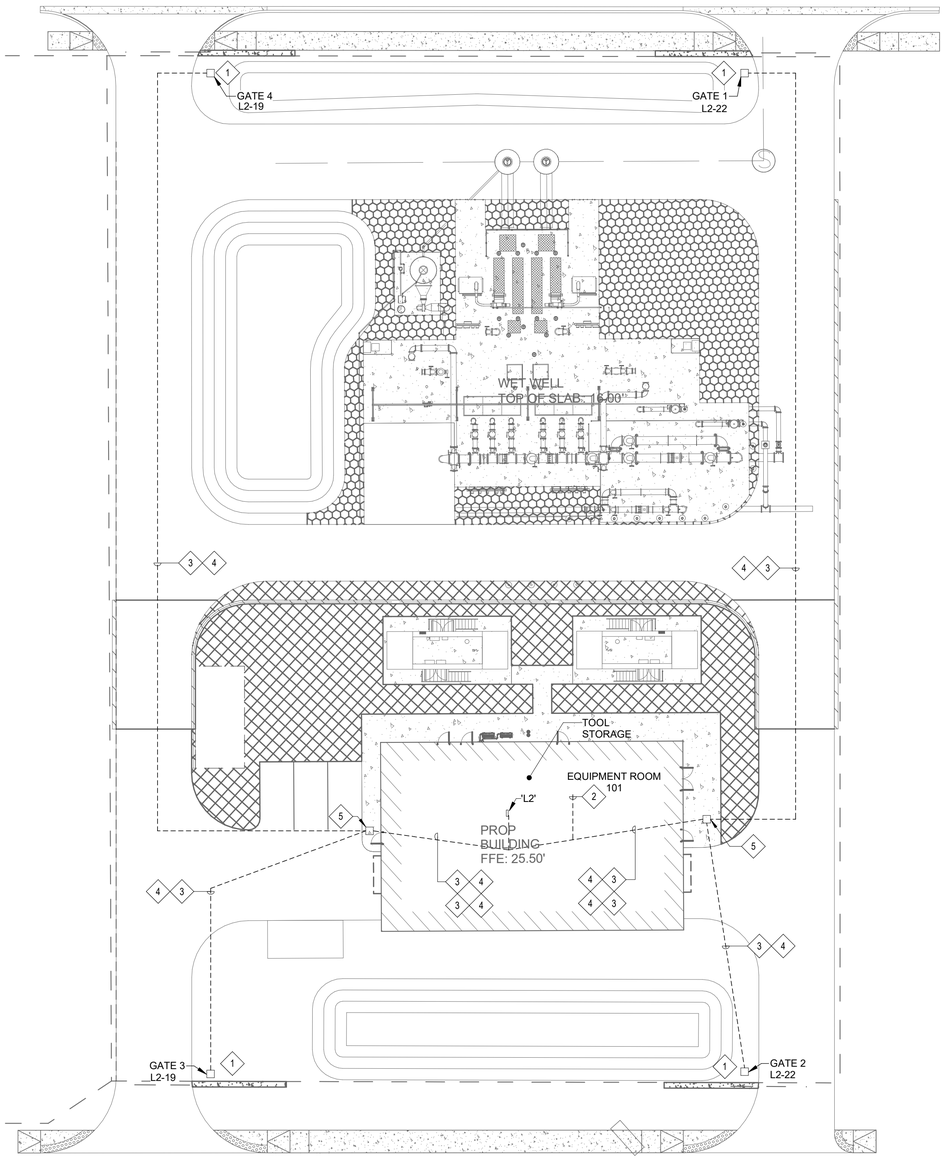

1 ELECTRICAL GATE SITE PLAN

1" = 20'-0"

SHEET KEYNOTES:

1. PROVIDE AND INSTALL (2) PULL BOXES. POWER AND DATA SHALL BE SEPERATED INTO SEPERATE PULLBOXES. REFER TO DETAIL 4 ON SHEET EB-09. STUB AND CAP POWER AND DATA CONDUIT FOR FUTURE INTERCONNECTION. LABEL CONDUIT AT STUB INDICATING USE.
2. STUB UP (4) 1" CONDUITS FOR FUTURE DATA RUN TO FUTURE CARD READER BY OTHERS. LABEL CONDUIT AT STUB ON BOTH ENDS INDICATING USE. COORDINATE STUB LOCATION WITH LOW VOLTAGE INSTALLER.
3. ROUTE (1) 1" DATA CONDUIT FROM STUB UP LOCATION TO DEMARCATION POINT FOR FUTURE DATA RUN TO FUTURE CARD READER BY OTHERS.
4. ROUTE (1) 1" POWER CONDUIT WITH (2) 6 AWG + (1) 6 AWG GND FROM PANEL 'L2' TO DEMARCATION POINT FOR FUTURE GATE OPERATOR BY OTHERS. PROVIDE POLARIS SPLICE TAPS AS REQUIRED TO INTERCONNECT CONDUCTORS TO CIRCUIT BREAKER WITHIN PANEL 'L2'.
5. PROVIDE AND INSTALL (2) PULL BOXES. POWER AND DATA SHALL BE SEPERATED INTO SEPERATE PULLBOXES. REFER TO DETAIL 4 ON SHEET EB-09. PROVIDE POLARIS SPLICE TAPS OR APPROVED EQUAL WITHIN POWER PULL BOX TO SPLICE (2) 6 AWG + (1) 6 AWG GND AND ROUTE (1) SET OF (2) 6 AWG + (1) 6 AWG GND TO EACH DEMARCATION POINT.

GENERAL NOTES:

1. FURNISH ALL LABOR, MATERIALS, TOOLS, ACCESSORIES, ETC. REQUIRED FOR A COMPLETE WORKING ELECTRICAL SYSTEM.
2. ALL ELECTRICAL WORK SHALL COMPLY WITH ALL APPLICABLE STATE, COUNTY, AND LOCAL CODES AND ORDINANCES, AS WELL AS ALL CURRENT STANDARDS, CODES AND PRACTICES AS REQUIRED BY 2017 NEC, NEMA, ANSI, NFPA, UBC, UL, IEEE, AND UTILITY COMPANY STANDARDS.
3. ALL EQUIPMENT, MATERIALS, AND WORK SHOWN ARE NEW UNLESS SPECIFICALLY NOTED AS EXISTING OR NOTED OTHERWISE ON OTHER SHEETS.
4. VERIFY EXACT LOCATION OF ALL RECEPTACLES ABOVE OR ADJACENT TO COUNTERS, FIXTURES, MIRRORS OUTDOOR FIXTURES AND MOUNTING HEIGHTS AND LOCATIONS OF ALL FIXTURES AND BOXES WITH ARCHITECTURAL ELEVATIONS PRIOR TO ROUGH-IN. NO EXTRA COSTS WILL BE ALLOWED FOR FAILURE TO COMPLY.
5. ANY POWER OUTAGE OF ANY CIRCUIT SHALL BE APPROVED BY THE OWNER IN WRITING A MINIMUM OF TWO WEEKS PRIOR TO OUTAGE. ALL OUTAGES SHALL BE DONE EXACTLY WHEN DETERMINED BY THE OWNER AND DONE BEFORE OR AFTER WORKING HOURS AND ON WEEKENDS. NO SINGLE OUTAGE SHALL REQUIRE MORE THAN 4 HOURS. PROVIDE TEMPORARY POWER, HEAT AND COOLING AS REQUIRED DURING OUTAGE.
6. DUE TO THE REQUIREMENTS TO INTERFACE WITH EXISTING FACILITIES AND UTILITIES, IT IS REQUIRED THAT THE CONTRACTOR VISIT THE SITE TO DETERMINE EXISTING CONDITIONS PRIOR TO BID.
7. PRIOR TO PURCHASE OF ANY PANEL, PROTECTIVE DEVICES, SWITCH, STARTER, CONDUIT, WIRE, ETC., TO FEED ANY PIECE OF MECHANICAL EQUIPMENT, VERIFY THE VOLTAGE, PHASE, AND LOAD OF THAT ITEM IN THE FIELD AND/OR WITH THE PARTICULAR ENTITY INVOLVED IN FURNISHING THE ITEM SUCH THAT THE PROPER SIZE & RATING OF THE MATERIALS ARE PURCHASED. NO EXTRAS WILL BE ALLOWED FOR FAILURE TO COMPLY. THIS APPLIES TO ALL EQUIPMENT UNDER OTHER SECTIONS & BY THE OWNER.
8. ALL RECEPTACLES SHALL MATCH THE MALE PLUG CONNECTOR OF ALL EQUIPMENT PROVIDED. VERIFY PRIOR TO PURCHASE. SEE GENERAL NOTE 7.
9. PULL ROPES: PROVIDE 300 POUND PULL WIRE OR NYLON EQUIVALENT IN ALL INTERIOR EMPTY CONDUIT RUNS. PROVIDE 1/4" DIA NYLON PULL ROPE IN EACH EMPTY EXTERIOR CONDUIT OR DUCT.
10. COORDINATE WITH MECHANICAL CONTRACTOR TO AVOID CONFLICTS BETWEEN DUCT WORK, SUPPLY & EXHAUST DIFFUSERS, LIGHTING, SOUND SYSTEMS, AND FIRE ALARM SYSTEM FIXTURES.
11. ELECTRICAL CONTRACTOR SHALL GUARANTEE THE ELECTRICAL WORK TO BE FREE FROM DEFECTS IN MATERIALS AND WORKMANSHIP FOR A PERIOD OF TWO YEARS FROM DATE OF FINAL ACCEPTANCE.
12. VERIFY THE EXACT LOCATION AND ELEVATION OF ALL ELECTRICAL EQUIPMENT PRIOR TO ROUGH-IN. FINAL CONNECTIONS OF EQUIPMENT SHALL BE PER MANUFACTURERS APPROVED WIRING DIAGRAMS, DETAILS, AND INSTRUCTIONS. THE ELECTRICAL CONTRACTOR SHALL PROVIDE MATERIALS AND EQUIPMENT COMPATIBLE WITH EQUIPMENT ACTUALLY SUPPLIED.

    NOTE: COORDINATE LUMINAIRE LOCATIONS WITH ARCHITECTURAL REFLECTED CEILING PLANS.
13. ORDER AND/OR RELEASE ORDERED MATERIALS PROMPTLY AFTER SUBMITTAL APPROVAL. NO SUBSTITUTIONS OR ALTERNATE METHODS OF INSTALLATION WILL BE ACCEPTED FOR FAILURE TO ORDER MATERIALS IN A TIMELY FASHION.
14. OBTAIN WRITTEN APPROVAL FROM THE ENGINEER OF ALL SHOP DRAWINGS AND MANUFACTURERS DATA FOR PANEL BOARDS, TRANSFORMERS, WIRING DEVICES, ETC. BEFORE RELEASING ORDERED MATERIALS. SUBMITTAL DATA SHALL INDICATE THAT THE CONTRACTOR HAS REVIEWED THE INFORMATION THEREIN AND THAT THE PROPOSED EQUIPMENT WILL MEET THE PHYSICAL CONSTRAINTS AT THE JOB SITE. ANY SUBSTITUTIONS SHALL BE OF THE EQUIVALENT OR BETTER QUALITY THAN THE SPECIFIED COMPONENTS.
15. TYPE MC OR TYPE AC CABLE SHALL ONLY BE USED WITH THE SPECIFIC WRITTEN PERMISSION OF THE PROGRAM/PROJECT MANAGER. ENT TYPE CONDUIT IS NOT ALLOWED EXCEPT AS SPECIFIED FOR UNDERGROUND DUCTBANKS.
16. CONDUIT/CONDUCTOR RUNS SHOWN ARE DIAGRAMMATICAL ONLY. THE BEST FINAL CONDUIT ROUTING SHALL BE AS DETERMINED BY THE ELECTRICAL CONTRACTOR AT THE TIME OF CONSTRUCTION.
17. ALL WIRE SHALL BE COPPER. MINIMUM SIZE FOR POWER WIRING SHALL BE **#10** AWG STRANDED UNLESS OTHERWISE NOTED. MINIMUM SIZE FOR CONTROL WIRING SHALL BE #14 AWG.
18. PROVIDE ALL PANEL BOARDS WITH TYPED DIRECTORIES INSTALLED UNDER A CLEAR PLASTIC COVER. SUBMIT DIRECTORY INFORMATION TO THE **OWNER** FOR APPROVAL PRIOR TO FINALIZATION.
19. SERIES RATING OF UPSTREAM OR DOWNSTREAM CIRCUIT BREAKERS OR FUSES IS PROHIBITED. ONLY FULLY RATED SYSTEM COMPONENTS WILL BE ACCEPTED.
20. PROVIDE ALL TRENCHING, EXCAVATION, BACK FILLING, SHORING, PUMPING, COMP ACTION TEST ETC. THAT ARE REQUIRED FOR THE SCOPE OF ELECTRICAL WORK.
21. ALL PANEL BOARDS, SWITCHES, MOTOR STARTERS, AND SWITCHBOARD CIRCUIT BREAKERS SHALL HAVE ENGRAVED MICARTA NAMEPLATES.
22. ALL CIRCUITS THAT SHARE A NEUTRAL SHALL BE PROVIDED WITH MULTIPOLE BREAKER.
23. PROVIDE CIRCUIT BREAKER LOCK LOCKED IN THE 'ON' POSITION FOR ALL CIRCUITS SERVING EMERGENCY LIGHTING.
24. ALL ANALOG INSTRUMENTATION WIRING SHALL BE SHIELDED.
25. IN ADDITION TO SURFACE RACEWAY AND/OR FLOOR MOUNTED OUTLET BOXES AND POWER POLES INDICATED ON ELECTRICAL DRAWINGS, THE ELECTRICAL CONTRACTOR SHALL PROVIDE ALL CABLE TRAY AND FLUSH MOUNTED OUTLET BOXES/BACK BOXES AND ASSOCIATED CONDUIT FOR ALL TELECOMMUNICATIONS OUTLETS (INCLUDING PA/MASTER CLOCK/SOUND SYSTEMS, CATV/VIDEO SYSTEMS, AND SECURITY SYSTEMS) ON THIS PROJECT.

CONSTRUCTION DOCUMENTS

No.	REVISIONS	DATE	BY

Kimley»Horn

Sign of Quality

PROFESSIONAL ENGINEER
PETER SYNTAX
0-063343-1B
U.S. VIRGIN ISLANDS

KHA PROJECT	045826000
DATE	JUNE 2026
SCALE	AS SHOWN
DESIGNED BY	SG
DRAWN BY	SG
CHECKED BY	PS

ELECTRICAL GATE SITE PLAN

LBJ PUMP STATION
PREPARED FOR
VIWMA

SHEET NUMBER
EB-03

This document, together with the concepts and designs presented herein, as an instrument of service, is intended only for the specific purpose and client for which it was prepared. Reuse of and improper reliance on this document without written authorization and adaptation by Kimley-Horn and Associates, Inc. shall be without liability to Kimley-Horn and Associates, Inc.

Autodesk Docs://045826000 - LBJ Pump Station Saint Croix R24/045826000_BJ pump station Saint Croix_MEP_R24.rvt

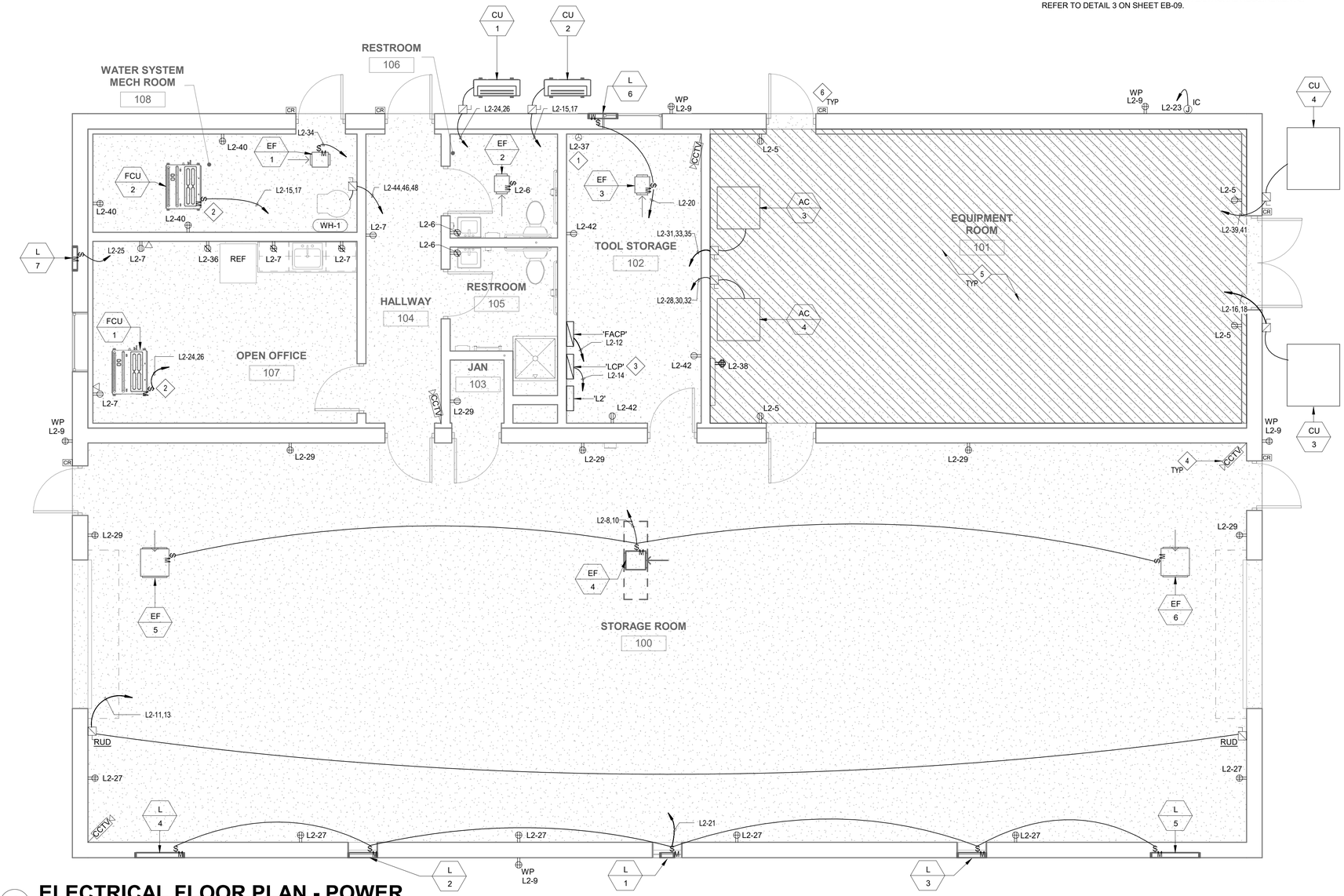

1 ELECTRICAL FLOOR PLAN - POWER

1/4" = 1'-0"

SHEET KEYNOTES:

1. AIR COMPRESSOR POWER FEED. CONTRACTOR TO SUPPLY AND INSTALL 30A, 208V, SINGLE PHASE DIRECT CONNECTION TO AIR COMPRESSOR. REFER TO MANUFACTURERS INSTRUCTIONS PRIOR TO INSTALLING CONDUIT, CONDUCTORS AND CIRCUIT BREAKER.COORDINATE CONNECTION LOCATION WITH CLIENT.
2. PROVIDE CIRCUITING FROM ASSOCIATED EQUIPMENT AS PER MANUFACTUERERS REQUIEMENTS.
3. PROVIDE LIGHTING CONTROL PANEL. REFER TO DETAIL 6 ON SHEET EB-010.
4. PROVIDE AND INSTALL BACKBOX AT +10' AFG FOR CCTV CAMERA. COORDINATE WITH LOW VOLTAGE INSTALLER AND CLIENT FOR ADDITIONAL REQUIREMENTS AND CAMERA SPECIFICATIONS. REFER TO DETAIL 4 ON SHEET EB-10.
5. REFER TO SHEET E-10 BY OTHERS FOR ADDITIONAL POWER DESIGN OF EQUIPMENT ROOM 101.
6. PROVIDE AND INSTALL DOOR SECURITY ACCESS. COORDINATE WITH LOW VOLTAGE INSTALLER AND CLIENT FOR ADDITIONAL REQUIREMENTS. REFER TO DETAIL 3 ON SHEET EB-09.

GENERAL NOTES:

1. FURNISH ALL LABOR, MATERIALS, TOOLS, ACCESSORIES, ETC. REQUIRED FOR A COMPLETE WORKING ELECTRICAL SYSTEM.
2. ALL ELECTRICAL WORK SHALL COMPLY WITH ALL APPLICABLE STATE, COUNTY, AND LOCAL CODES AND ORDINANCES, AS WELL AS ALL CURRENT STANDARDS, CODES AND PRACTICES AS REQUIRED BY 2017 NEC, NEMA, ANSI, NFPA, UBC, UL, IEEE, AND UTILITY COMPANY STANDARDS.
3. ALL EQUIPMENT, MATERIALS, AND WORK SHOWN ARE NEW UNLESS SPECIFICALLY NOTED AS EXISTING OR NOTED OTHERWISE ON OTHER SHEETS.
4. VERIFY EXACT LOCATION OF ALL RECEPTACLES ABOVE OR ADJACENT TO COUNTERS, FIXTURES, MIRRORS OUTDOOR FIXTURES AND MOUNTING HEIGHTS AND LOCATIONS OF ALL FIXTURES AND BOXES WITH ARCHITECTURAL ELEVATIONS PRIOR TO ROUGH-IN. NO EXTRA COSTS WILL BE ALLOWED FOR FAILURE TO COMPLY.
5. ANY POWER OUTAGE OF ANY CIRCUIT SHALL BE APPROVED BY THE OWNER IN WRITING A MINIMUM OF TWO WEEKS PRIOR TO OUTAGE. ALL OUTAGES SHALL BE DONE EXACTLY WHEN DETERMINED BY THE OWNER AND DONE BEFORE OR AFTER WORKING HOURS AND ON WEEKENDS. NO SINGLE OUTAGE SHALL REQUIRE MORE THAN 4 HOURS. PROVIDE TEMPORARY POWER, HEAT AND COOLING AS REQUIRED DURING OUTAGE.
6. DUE TO THE REQUIREMENTS TO INTERFACE WITH EXISTING FACILITIES AND UTILITIES, IT IS REQUIRED THAT THE CONTRACTOR VISIT THE SITE TO DETERMINE EXISTING CONDITIONS PRIOR TO BID.
7. PRIOR TO PURCHASE OF ANY PANEL, PROTECTIVE DEVICES, SWITCH, STARTER, CONDUIT, WIRE, ETC., TO FEED ANY PIECE OF MECHANICAL EQUIPMENT, VERIFY THE VOLTAGE, PHASE, AND LOAD OF THAT ITEM IN THE FIELD AND/OR WITH THE PARTICULAR ENTITY INVOLVED IN FURNISHING THE ITEM SUCH THAT THE PROPER SIZE & RATING OF THE MATERIALS ARE PURCHASED. NO EXTRAS WILL BE ALLOWED FOR FAILURE TO COMPLY. THIS APPLIES TO ALL EQUIPMENT UNDER OTHER SECTIONS & BY THE OWNER.
8. ALL RECEPTACLES SHALL MATCH THE MALE PLUG CONNECTOR OF ALL EQUIPMENT PROVIDED. VERIFY PRIOR TO PURCHASE. SEE GENERAL NOTE 7.
9. PULL ROPES: PROVIDE 300 POUND PULL WIRE OR NYLON EQUIVALENT IN ALL INTERIOR EMPTY CONDUIT RUNS. PROVIDE 1/4" DIA NYLON PULL ROPE IN EACH EMPTY EXTERIOR CONDUIT OR DUCT.
10. COORDINATE WITH MECHANICAL CONTRACTOR TO AVOID CONFLICTS BETWEEN DUCT WORK, SUPPLY & EXHAUST DIFFUSERS, LIGHTING, SOUND SYSTEMS, AND FIRE ALARM SYSTEM FIXTURES.
11. ELECTRICAL CONTRACTOR SHALL GUARANTEE THE ELECTRICAL WORK TO BE FREE FROM DEFECTS IN MATERIALS AND WORKMANSHIP FOR A PERIOD OF TWO YEARS FROM DATE OF FINAL ACCEPTANCE.
12. VERIFY THE EXACT LOCATION AND ELEVATION OF ALL ELECTRICAL EQUIPMENT PRIOR TO ROUGH-IN. FINAL CONNECTIONS OF EQUIPMENT SHALL BE PER MANUFACTURERS APPROVED WIRING DIAGRAMS, DETAILS, AND INSTRUCTIONS. THE ELECTRICAL CONTRACTOR SHALL PROVIDE MATERIALS AND EQUIPMENT COMPATIBLE WITH EQUIPMENT ACTUALLY SUPPLIED.

    NOTE: COORDINATE LUMINAIRE LOCATIONS WITH ARCHITECTURAL REFLECTED CEILING PLANS.
13. ORDER AND/OR RELEASE ORDERED MATERIALS PROMPTLY AFTER SUBMITTAL APPROVAL. NO SUBSTITUTIONS OR ALTERNATE METHODS OF INSTALLATION WILL BE ACCEPTED FOR FAILURE TO ORDER MATERIALS IN A TIMELY FASHION.
14. OBTAIN WRITTEN APPROVAL FROM THE ENGINEER OF ALL SHOP DRAWINGS AND MANUFACTURERS DATA FOR PANEL BOARDS, TRANSFORMERS, WIRING DEVICES, ETC. BEFORE RELEASING ORDERED MATERIALS. SUBMITTAL DATA SHALL INDICATE THAT THE CONTRACTOR HAS REVIEWED THE INFORMATION THEREIN AND THAT THE PROPOSED EQUIPMENT WILL MEET THE PHYSICAL CONSTRAINTS AT THE JOB SITE. ANY SUBSTITUTIONS SHALL BE OF THE EQUIVALENT OR BETTER QUALITY THAN THE SPECIFIED COMPONENTS.
15. TYPE MC OR TYPE AC CABLE SHALL ONLY BE USED WITH THE SPECIFIC WRITTEN PERMISSION OF THE PROGRAM/PROJECT MANAGER. ENT TYPE CONDUIT IS NOT ALLOWED EXCEPT AS SPECIFIED FOR UNDERGROUND DUCTBANKS.
16. CONDUIT/CONDUCTOR RUNS SHOWN ARE DIAGRAMMATICAL ONLY. THE BEST FINAL CONDUIT ROUTING SHALL BE AS DETERMINED BY THE ELECTRICAL CONTRACTOR AT THE TIME OF CONSTRUCTION.
17. ALL WIRE SHALL BE COPPER. MINIMUM SIZE FOR POWER WIRING SHALL BE **#10** AWG STRANDED UNLESS OTHERWISE NOTED. MINIMUM SIZE FOR CONTROL WIRING SHALL BE #14 AWG.
18. PROVIDE ALL PANEL BOARDS WITH TYPED DIRECTORIES INSTALLED UNDER A CLEAR PLASTIC COVER. SUBMIT DIRECTORY INFORMATION TO THE **OWNER** FOR APPROVAL PRIOR TO FINALIZATION.
19. SERIES RATING OF UPSTREAM OR DOWNSTREAM CIRCUIT BREAKERS OR FUSES IS PROHIBITED. ONLY FULLY RATED SYSTEM COMPONENTS WILL BE ACCEPTED.
20. PROVIDE ALL TRENCHING, EXCAVATION, BACK FILLING, SHORING, PUMPING, COMP ACTION TEST ETC. THAT ARE REQUIRED FOR THE SCOPE OF ELECTRICAL WORK.
21. ALL PANEL BOARDS, SWITCHES, MOTOR STARTERS, AND SWITCHBOARD CIRCUIT BREAKERS SHALL HAVE ENGRAVED MICARTA NAMEPLATES.
22. ALL CIRCUITS THAT SHARE A NEUTRAL SHALL BE PROVIDED WITH MULTIPOLE BREAKER.
23. PROVIDE CIRCUIT BREAKER LOCK LOCKED IN THE 'ON' POSITION FOR ALL CIRCUITS SERVING EMERGENCY LIGHTING.
24. ALL ANALOG INSTRUMENTATION WIRING SHALL BE SHIELDED.
25. IN ADDITION TO SURFACE RACEWAY AND/OR FLOOR MOUNTED OUTLET BOXES AND POWER POLES INDICATED ON ELECTRICAL DRAWINGS, THE ELECTRICAL CONTRACTOR SHALL PROVIDE ALL CABLE TRAY AND FLUSH MOUNTED OUTLET BOXES/BACK BOXES AND ASSOCIATED CONDUIT FOR ALL TELECOMMUNICATIONS OUTLETS (INCLUDING PA/MASTER CLOCK/SOUND SYSTEMS, CATV/VIDEO SYSTEMS, AND SECURITY SYSTEMS) ON THIS PROJECT.
26. ALL LOW VOLTAGE SHALL BE STUBBED INTO CEILING AND ROUTED TO TELECOMMUNICATIONS BACK BOARD BY OTHERS IN EQUIPMENT ROOM 101. REFER TO DETAIL 4 ON SHEET EB-10.

CONSTRUCTION DOCUMENTS

No.	REVISIONS	DATE	BY

Kimley»Horn

Sign of Quality

PROFESSIONAL ENGINEER
PETER SYNTAX
0-063343-1B
U.S. VIRGIN ISLANDS

KHA PROJECT 045826000	DATE JUNE 2026
SCALE AS SHOWN	
DESIGNED BY SG	
DRAWN BY SG	
CHECKED BY PS	

BUILDING ELECTRICAL FLOOR PLAN - POWER & LOW VOLTAGE

LBJ PUMP STATION PREPARED FOR VIWMA

SHEET NUMBER
EB-04

This document, together with the concepts and designs presented herein, as an instrument of service, is intended only for the specific purpose and client for which it was prepared. Reuse of and improper reliance on this document without written authorization and adaptation by Kimley-Horn and Associates, Inc. shall be without liability to Kimley-Horn and Associates, Inc.

Autodesk Docs://045826000 - LBJ Pump Station Saint Croix R24/045826000 LBJ pump station Saint Croix MEP R24.rvt

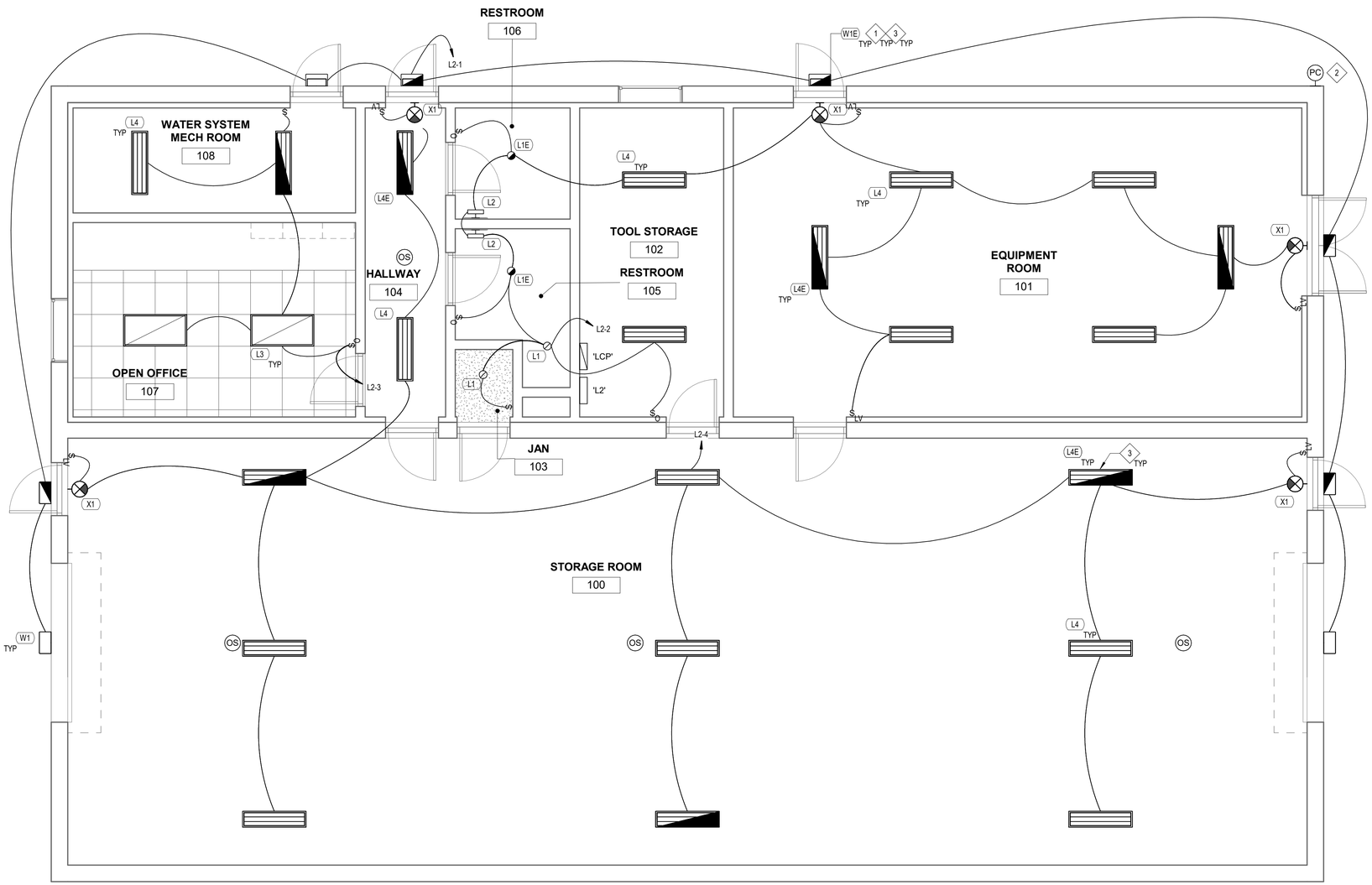

1 ELECTRICAL REFLECTED CEILING PLAN

1/4" = 1'-0"

SHEET KEYNOTES:

1. CIRCUIT EXTERIOR LIGHTING THROUGH LIGHTING CONTROL PANEL 'LCP' LOCATED IN TOOL STORAGE 102. CONTROL VIA EXTERIOR PHOTOCELL.
2. PHOTOCELL TO BE MOUNTED ON NORTH WALL MINIMUM 10' AFG. ALL EXTERIOR LIGHTING SHALL BE CONTROLLED BY PHOTOCELL.
3. LIGHTING SHALL BE CONTROLLED FROM TWO SEPERATE DRIVERS, ONE FOR NORMAL OPERATIONS AND ONE FOR UL924 EMERGENCY OPERATION. TYPICAL FOR ALL EMERGENCY FIXTURES.

GENERAL NOTES:

1. FURNISH ALL LABOR, MATERIALS, TOOLS, ACCESSORIES, ETC. REQUIRED FOR A COMPLETE WORKING ELECTRICAL SYSTEM.
2. ALL ELECTRICAL WORK SHALL COMPLY WITH ALL APPLICABLE STATE, COUNTY, AND LOCAL CODES AND ORDINANCES, AS WELL AS ALL CURRENT STANDARDS, CODES AND PRACTICES AS REQUIRED BY 2017 NEC, NEMA, ANSI, NFPA, UBC, UL, IEEE, AND UTILITY COMPANY STANDARDS.
3. ALL EQUIPMENT, MATERIALS, AND WORK SHOWN ARE NEW UNLESS SPECIFICALLY NOTED AS EXISTING OR NOTED OTHERWISE ON OTHER SHEETS.
4. VERIFY EXACT LOCATION OF ALL RECEPTACLES ABOVE OR ADJACENT TO COUNTERS, FIXTURES, MIRRORS OUTDOOR FIXTURES AND MOUNTING HEIGHTS AND LOCATIONS OF ALL FIXTURES AND BOXES WITH ARCHITECTURAL ELEVATIONS PRIOR TO ROUGH-IN. NO EXTRA COSTS WILL BE ALLOWED FOR FAILURE TO COMPLY.
5. ANY POWER OUTAGE OF ANY CIRCUIT SHALL BE APPROVED BY THE OWNER IN WRITING A MINIMUM OF TWO WEEKS PRIOR TO OUTAGE. ALL OUTAGES SHALL BE DONE EXACTLY WHEN DETERMINED BY THE OWNER AND DONE BEFORE OR AFTER WORKING HOURS AND ON WEEKENDS. NO SINGLE OUTAGE SHALL REQUIRE MORE THAN 4 HOURS. PROVIDE TEMPORARY POWER, HEAT AND COOLING AS REQUIRED DURING OUTAGE.
6. DUE TO THE REQUIREMENTS TO INTERFACE WITH EXISTING FACILITIES AND UTILITIES, IT IS REQUIRED THAT THE CONTRACTOR VISIT THE SITE TO DETERMINE EXISTING CONDITIONS PRIOR TO BID.
7. PRIOR TO PURCHASE OF ANY PANEL, PROTECTIVE DEVICES, SWITCH, STARTER, CONDUIT, WIRE, ETC., TO FEED ANY PIECE OF MECHANICAL EQUIPMENT, VERIFY THE VOLTAGE, PHASE, AND LOAD OF THAT ITEM IN THE FIELD AND/OR WITH THE PARTICULAR ENTITY INVOLVED IN FURNISHING THE ITEM SUCH THAT THE PROPER SIZE & RATING OF THE MATERIALS ARE PURCHASED. NO EXTRAS WILL BE ALLOWED FOR FAILURE TO COMPLY. THIS APPLIES TO ALL EQUIPMENT UNDER OTHER SECTIONS & BY THE OWNER.
8. ALL RECEPTACLES SHALL MATCH THE MALE PLUG CONNECTOR OF ALL EQUIPMENT PROVIDED. VERIFY PRIOR TO PURCHASE. SEE GENERAL NOTE 7.
9. PULL ROPES: PROVIDE 300 POUND PULL WIRE OR NYLON EQUIVALENT IN ALL INTERIOR EMPTY CONDUIT RUNS. PROVIDE 1/4" DIA NYLON PULL ROPE IN EACH EMPTY EXTERIOR CONDUIT OR DUCT.
10. COORDINATE WITH MECHANICAL CONTRACTOR TO AVOID CONFLICTS BETWEEN DUCT WORK, SUPPLY & EXHAUST DIFFUSERS, LIGHTING, SOUND SYSTEMS, AND FIRE ALARM SYSTEM FIXTURES.
11. ELECTRICAL CONTRACTOR SHALL GUARANTEE THE ELECTRICAL WORK TO BE FREE FROM DEFECTS IN MATERIALS AND WORKMANSHIP FOR A PERIOD OF TWO YEARS FROM DATE OF FINAL ACCEPTANCE.
12. VERIFY THE EXACT LOCATION AND ELEVATION OF ALL ELECTRICAL EQUIPMENT PRIOR TO ROUGH-IN. FINAL CONNECTIONS OF EQUIPMENT SHALL BE PER MANUFACTURERS APPROVED WIRING DIAGRAMS, DETAILS, AND INSTRUCTIONS. THE ELECTRICAL CONTRACTOR SHALL PROVIDE MATERIALS AND EQUIPMENT COMPATIBLE WITH EQUIPMENT ACTUALLY SUPPLIED.

    NOTE: COORDINATE LUMINAIRE LOCATIONS WITH ARCHITECTURAL REFLECTED CEILING PLANS.
13. ORDER AND/OR RELEASE ORDERED MATERIALS PROMPTLY AFTER SUBMITTAL APPROVAL. NO SUBSTITUTIONS OR ALTERNATE METHODS OF INSTALLATION WILL BE ACCEPTED FOR FAILURE TO ORDER MATERIALS IN A TIMELY FASHION.
14. OBTAIN WRITTEN APPROVAL FROM THE ENGINEER OF ALL SHOP DRAWINGS AND MANUFACTURERS DATA FOR PANEL BOARDS, TRANSFORMERS, WIRING DEVICES, ETC. BEFORE RELEASING ORDERED MATERIALS. SUBMITTAL DATA SHALL INDICATE THAT THE CONTRACTOR HAS REVIEWED THE INFORMATION THEREIN AND THAT THE PROPOSED EQUIPMENT WILL MEET THE PHYSICAL CONSTRAINTS AT THE JOB SITE. ANY SUBSTITUTIONS SHALL BE OF THE EQUIVALENT OR BETTER QUALITY THAN THE SPECIFIED COMPONENTS.
15. TYPE MC OR TYPE AC CABLE SHALL ONLY BE USED WITH THE SPECIFIC WRITTEN PERMISSION OF THE PROGRAM/PROJECT MANAGER. ENT TYPE CONDUIT IS NOT ALLOWED EXCEPT AS SPECIFIED FOR UNDERGROUND DUCTBANKS.
16. CONDUIT/CONDUCTOR RUNS SHOWN ARE DIAGRAMMATICAL ONLY. THE BEST FINAL CONDUIT ROUTING SHALL BE AS DETERMINED BY THE ELECTRICAL CONTRACTOR AT THE TIME OF CONSTRUCTION.
17. ALL WIRE SHALL BE COPPER. MINIMUM SIZE FOR POWER WIRING SHALL BE **#10** AWG STRANDED UNLESS OTHERWISE NOTED. MINIMUM SIZE FOR CONTROL WIRING SHALL BE #14 AWG.
18. PROVIDE ALL PANEL BOARDS WITH TYPED DIRECTORIES INSTALLED UNDER A CLEAR PLASTIC COVER. SUBMIT DIRECTORY INFORMATION TO THE **OWNER** FOR APPROVAL PRIOR TO FINALIZATION.
19. SERIES RATING OF UPSTREAM OR DOWNSTREAM CIRCUIT BREAKERS OR FUSES IS PROHIBITED. ONLY FULLY RATED SYSTEM COMPONENTS WILL BE ACCEPTED.
20. PROVIDE ALL TRENCHING, EXCAVATION, BACK FILLING, SHORING, PUMPING, COMP ACTION TEST ETC. THAT ARE REQUIRED FOR THE SCOPE OF ELECTRICAL WORK.
21. ALL PANEL BOARDS, SWITCHES, MOTOR STARTERS, AND SWITCHBOARD CIRCUIT BREAKERS SHALL HAVE ENGRAVED MICARTA NAMEPLATES.
22. ALL CIRCUITS THAT SHARE A NEUTRAL SHALL BE PROVIDED WITH MULTIPOLE BREAKER.
23. PROVIDE CIRCUIT BREAKER LOCK LOCKED IN THE 'ON' POSITION FOR ALL CIRCUITS SERVING EMERGENCY LIGHTING.
24. ALL ANALOG INSTRUMENTATION WIRING SHALL BE SHIELDED.
25. IN ADDITION TO SURFACE RACEWAY AND/OR FLOOR MOUNTED OUTLET BOXES AND POWER POLES INDICATED ON ELECTRICAL DRAWINGS, THE ELECTRICAL CONTRACTOR SHALL PROVIDE ALL CABLE TRAY AND FLUSH MOUNTED OUTLET BOXES/BACK BOXES AND ASSOCIATED CONDUIT FOR ALL TELECOMMUNICATIONS OUTLETS (INCLUDING PA/MASTER CLOCK/SOUND SYSTEMS, CATV/VIDEO SYSTEMS, AND SECURITY SYSTEMS) ON THIS PROJECT.

CONSTRUCTION DOCUMENTS

No.	REVISIONS	DATE	BY

Kimley»Horn

Sign of Quality

PROFESSIONAL ENGINEER
PETER MARTIN SYNTAX
0-063343-1B
U.S. VIRGIN ISLANDS

KHA PROJECT 045826000	
DATE	JUNE 2026
SCALE	AS SHOWN
DESIGNED BY	SG
DRAWN BY	SG
CHECKED BY	PS

BUILDING ELECTRICAL REFLECTED CEILING PLAN

LBJ PUMP STATION
PREPARED FOR
VIWMA

SHEET NUMBER
EB-05

This document, together with the concepts and designs presented herein, as an instrument of service, is intended only for the specific purpose and client for which it was prepared. Reuse of and improper reliance on this document without written authorization and adaptation by Kimley-Horn and Associates, Inc. shall be without liability to Kimley-Horn and Associates, Inc.

Autodesk Docs://045826000 - LBJ Pump Station Saint Croix/R24/045826000-LBJ pump station Saint Croix MEP R24.rvt

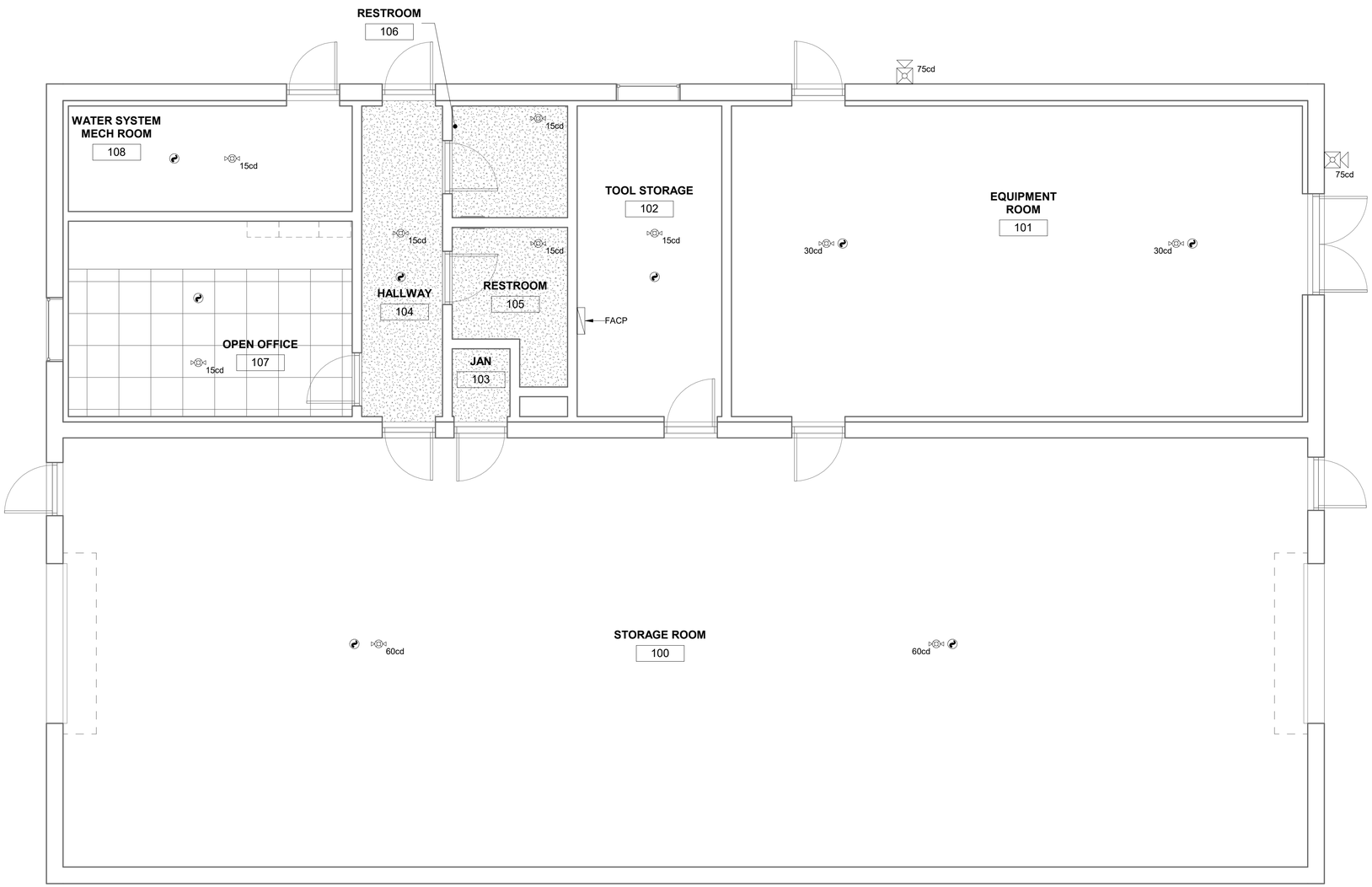

1 **ELECTRICAL FIRE ALARM PLAN**

1/4" = 1'-0"

GENERAL NOTES:

1. FURNISH ALL LABOR, MATERIALS, TOOLS, ACCESSORIES, ETC. REQUIRED FOR A COMPLETE WORKING ELECTRICAL SYSTEM.
2. ALL ELECTRICAL WORK SHALL COMPLY WITH ALL APPLICABLE STATE, COUNTY, AND LOCAL CODES AND ORDINANCES, AS WELL AS ALL CURRENT STANDARDS, CODES AND PRACTICES AS REQUIRED BY 2017 NEC, NEMA, ANSI, NFPA, UBC, UL, IEEE, AND UTILITY COMPANY STANDARDS.
3. ALL EQUIPMENT, MATERIALS, AND WORK SHOWN ARE NEW UNLESS SPECIFICALLY NOTED AS EXISTING OR NOTED OTHERWISE ON OTHER SHEETS.
4. VERIFY EXACT LOCATION OF ALL RECEPTACLES ABOVE OR ADJACENT TO COUNTERS, FIXTURES, MIRRORS OUTDOOR FIXTURES AND MOUNTING HEIGHTS AND LOCATIONS OF ALL FIXTURES AND BOXES WITH ARCHITECTURAL ELEVATIONS PRIOR TO ROUGH-IN. NO EXTRA COSTS WILL BE ALLOWED FOR FAILURE TO COMPLY.
5. ANY POWER OUTAGE OF ANY CIRCUIT SHALL BE APPROVED BY THE OWNER IN WRITING A MINIMUM OF TWO WEEKS PRIOR TO OUTAGE. ALL OUTAGES SHALL BE DONE EXACTLY WHEN DETERMINED BY THE OWNER AND DONE BEFORE OR AFTER WORKING HOURS AND ON WEEKENDS. NO SINGLE OUTAGE SHALL REQUIRE MORE THAN 4 HOURS. PROVIDE TEMPORARY POWER, HEAT AND COOLING AS REQUIRED DURING OUTAGE.
6. DUE TO THE REQUIREMENTS TO INTERFACE WITH EXISTING FACILITIES AND UTILITIES, IT IS REQUIRED THAT THE CONTRACTOR VISIT THE SITE TO DETERMINE EXISTING CONDITIONS PRIOR TO BID.
7. PRIOR TO PURCHASE OF ANY PANEL, PROTECTIVE DEVICES, SWITCH, STARTER, CONDUIT, WIRE, ETC., TO FEED ANY PIECE OF MECHANICAL EQUIPMENT, VERIFY THE VOLTAGE, PHASE, AND LOAD OF THAT ITEM IN THE FIELD AND/OR WITH THE PARTICULAR ENTITY INVOLVED IN FURNISHING THE ITEM SUCH THAT THE PROPER SIZE & RATING OF THE MATERIALS ARE PURCHASED. NO EXTRAS WILL BE ALLOWED FOR FAILURE TO COMPLY. THIS APPLIES TO ALL EQUIPMENT UNDER OTHER SECTIONS & BY THE OWNER.
8. ALL RECEPTACLES SHALL MATCH THE MALE PLUG CONNECTOR OF ALL EQUIPMENT PROVIDED. VERIFY PRIOR TO PURCHASE. SEE GENERAL NOTE 7.
9. PULL ROPES: PROVIDE 300 POUND PULL WIRE OR NYLON EQUIVALENT IN ALL INTERIOR EMPTY CONDUIT RUNS. PROVIDE 1/4" DIA NYLON PULL ROPE IN EACH EMPTY EXTERIOR CONDUIT OR DUCT.
10. COORDINATE WITH MECHANICAL CONTRACTOR TO AVOID CONFLICTS BETWEEN DUCT WORK, SUPPLY & EXHAUST DIFFUSERS, LIGHTING, SOUND SYSTEMS, AND FIRE ALARM SYSTEM FIXTURES.
11. ELECTRICAL CONTRACTOR SHALL GUARANTEE THE ELECTRICAL WORK TO BE FREE FROM DEFECTS IN MATERIALS AND WORKMANSHIP FOR A PERIOD OF TWO YEARS FROM DATE OF FINAL ACCEPTANCE.
12. VERIFY THE EXACT LOCATION AND ELEVATION OF ALL ELECTRICAL EQUIPMENT PRIOR TO ROUGH-IN. FINAL CONNECTIONS OF EQUIPMENT SHALL BE PER MANUFACTURERS APPROVED WIRING DIAGRAMS, DETAILS, AND INSTRUCTIONS. THE ELECTRICAL CONTRACTOR SHALL PROVIDE MATERIALS AND EQUIPMENT COMPATIBLE WITH EQUIPMENT ACTUALLY SUPPLIED.

    NOTE: COORDINATE LUMINAIRE LOCATIONS WITH ARCHITECTURAL REFLECTED CEILING PLANS.
13. ORDER AND/OR RELEASE ORDERED MATERIALS PROMPTLY AFTER SUBMITTAL APPROVAL. NO SUBSTITUTIONS OR ALTERNATE METHODS OF INSTALLATION WILL BE ACCEPTED FOR FAILURE TO ORDER MATERIALS IN A TIMELY FASHION.
14. OBTAIN WRITTEN APPROVAL FROM THE ENGINEER OF ALL SHOP DRAWINGS AND MANUFACTURERS DATA FOR PANEL BOARDS, TRANSFORMERS, WIRING DEVICES, ETC. BEFORE RELEASING ORDERED MATERIALS. SUBMITTAL DATA SHALL INDICATE THAT THE CONTRACTOR HAS REVIEWED THE INFORMATION THEREIN AND THAT THE PROPOSED EQUIPMENT WILL MEET THE PHYSICAL CONSTRAINTS AT THE JOB SITE. ANY SUBSTITUTIONS SHALL BE OF THE EQUIVALENT OR BETTER QUALITY THAN THE SPECIFIED COMPONENTS.
15. TYPE MC OR TYPE AC CABLE SHALL ONLY BE USED WITH THE SPECIFIC WRITTEN PERMISSION OF THE PROGRAM/PROJECT MANAGER. ENT TYPE CONDUIT IS NOT ALLOWED EXCEPT AS SPECIFIED FOR UNDERGROUND DUCTBANKS.
16. CONDUIT/CONDUCTOR RUNS SHOWN ARE DIAGRAMMATICAL ONLY. THE BEST FINAL CONDUIT ROUTING SHALL BE AS DETERMINED BY THE ELECTRICAL CONTRACTOR AT THE TIME OF CONSTRUCTION.
17. ALL WIRE SHALL BE COPPER. MINIMUM SIZE FOR POWER WIRING SHALL BE **#10** AWG STRANDED UNLESS OTHERWISE NOTED. MINIMUM SIZE FOR CONTROL WIRING SHALL BE #14 AWG.
18. PROVIDE ALL PANEL BOARDS WITH TYPED DIRECTORIES INSTALLED UNDER A CLEAR PLASTIC COVER. SUBMIT DIRECTORY INFORMATION TO THE **OWNER** FOR APPROVAL PRIOR TO FINALIZATION.
19. SERIES RATING OF UPSTREAM OR DOWNSTREAM CIRCUIT BREAKERS OR FUSES IS PROHIBITED. ONLY FULLY RATED SYSTEM COMPONENTS WILL BE ACCEPTED.
20. PROVIDE ALL TRENCHING, EXCAVATION, BACK FILLING, SHORING, PUMPING, COMP ACTION TEST ETC. THAT ARE REQUIRED FOR THE SCOPE OF ELECTRICAL WORK.
21. ALL PANEL BOARDS, SWITCHES, MOTOR STARTERS, AND SWITCHBOARD CIRCUIT BREAKERS SHALL HAVE ENGRAVED MICARTA NAMEPLATES.
22. ALL CIRCUITS THAT SHARE A NEUTRAL SHALL BE PROVIDED WITH MULTIPOLE BREAKER.
23. PROVIDE CIRCUIT BREAKER LOCK LOCKED IN THE 'ON' POSITION FOR ALL CIRCUITS SERVING EMERGENCY LIGHTING.
24. ALL ANALOG INSTRUMENTATION WIRING SHALL BE SHIELDED.
25. IN ADDITION TO SURFACE RACEWAY AND/OR FLOOR MOUNTED OUTLET BOXES AND POWER POLES INDICATED ON ELECTRICAL DRAWINGS, THE ELECTRICAL CONTRACTOR SHALL PROVIDE ALL CABLE TRAY AND FLUSH MOUNTED OUTLET BOXES/BACK BOXES AND ASSOCIATED CONDUIT FOR ALL TELECOMMUNICATIONS OUTLETS (INCLUDING PA/MASTER CLOCK/SOUND SYSTEMS, CATV/VIDEO SYSTEMS, AND SECURITY SYSTEMS) ON THIS PROJECT.

CONSTRUCTION DOCUMENTS

No.	REVISIONS	DATE	BY

Kimley»Horn

Sign of Quality

PROFESSIONAL ENGINEER
PETER SYNTAX
0-063343-1B
U.S. VIRGIN ISLANDS

KHA PROJECT 045826000

DATE JUNE 2026

SCALE AS SHOWN

DESIGNED BY SG

DRAWN BY SG

CHECKED BY PS

BUILDING ELECTRICAL
FLOOR PLAN - FIRE ALARM

LBJ PUMP STATION
PREPARED FOR
VIWMA

SHEET NUMBER
EB-06

This document, together with the concepts and designs presented herein, as an instrument of service, is intended only for the specific purpose and client for which it was prepared. Reuse of and improper reliance on this document without written authorization and adaptation by Kimley-Horn and Associates, Inc. shall be without liability to Kimley-Horn and Associates, Inc.

Autodesk Docs://045826000 - LBJ Pump Station Saint Croix R24/045826000 LBJ pump station Saint Croix MEP R24.rvt

WIRE & CONDUIT SCHEDULE (CU)

SCHEDULE NUMBER (2-4 DIGIT #)
RACEWAY TYPE (NOTE 5)
COPPER CONDUCTOR
XXXXZ-#C GND
SUBSCRIPT (NOTE 4)
NUMBER OF CURRENT CARRYING CONDUCTORS (1-2 DIGIT#, NOTE 3)

ALL COPPER CONDUCTORS

(E.G.) 150E-4C SE

TAG	TYPICAL OCP DEVICE	CONDUCTOR AMPACITY	CONDUIT SIZE	CONDUCTOR (NOTE 6)		IG (CU)	SE (CU)	NOTES
				SIZE (AWG)	GND (CU)			
20Z-#C	20	20	3/4"	12	12	12	8	
30Z-#C	30	30	3/4"	10	10	10	8	
40Z-#C	40	40	3/4"	8	10	10	8	
70Z-#C	60	70	1"	4	8	8	8	

WIRE AND CONDUIT SCHEDULE NOTES:

1. GROUND "GND" CONDUCTOR MAY BE DELETED ON SERVICE ENTRANCE CONDUCTORS.
2. EQUIPMENT GROUNDING CONDUCTORS SHALL BE SIZED PER TABLE 250-122 (NEC 2020) WHEN CIRCUIT BREAKERS ARE SIZED GREATER THAN AMPERE RATING SHOWN IN TABLE.
3. INDICATES THE QUANTITY OF CURRENT CARRYING CONDUCTORS (GROUND CONDUCTORS NOT INCLUDED) TO BE PULLED IN EACH RACEWAY.
4. GROUNDING SUBSCRIPTS ARE AS FOLLOWS: NO SUBSCRIPT = PROVIDE GROUND WIRE SIZE PER "GND" COLUMN, R = PROVIDE RACEWAY ONLY, CONDUCTORS FURNISHED AND INSTALLED BY OTHERS, SE = PROVIDE GROUND WIRE SIZED PER "SE" COLUMN, IG = PROVIDE AN INSULATED GROUND CONDUCTOR PER "IG" COLUMN ALONG WITH THE GROUND OR EQUIPMENT GROUND CONDUCTOR, NG = DO NOT PROVIDE GROUNDING CONDUCTOR IN RACEWAY.
5. RACEWAY SUBSCRIPTS "Z" ARE AS FOLLOWS: P = PVC SCH-40, E = EMT, R = RIGID, AF = ALUMINUM FLEX, SF = STEEL FLEX, LT = LIQUID TIGHT FLEX, S = SEE SPECIFICATIONS FOR REQUIRED TYPE BASED ON USE AND LOCATION.
6. ALL COPPER CONDUCTORS SHOWN ARE THWN UNLESS OTHERWISE NOTED.

BRANCH PANEL: L2

LOCATION: TOOL STORAGE 102
SUPPLY FROM: L1
MOUNTING: SURFACE
ENCLOSURE: NEMA 1

VOLTS: 120/208 Wye
PHASES: 3
WIRES: 4

A.I.C. RATING: 10K
MAINS TYPE: MCB
MAINS RATING: 200 A
MCB RATING: 200 A

CKT	CIRCUIT DESCRIPTION	TRIP	POLES	A		B		C		POLES	TRIP	CIRCUIT DESCRIPTION	CKT
1	LTG - EXTERIOR (2)	20 A	1	99 VA	364 VA					1	20 A	LTG - TOOL STO., REST., JANI....	2
3	LTG - MECH ROOM & OFFICE (2)	20 A	1			140 VA	391 VA			1	20 A	LTG - STORAGE & HALLWAY (2)	4
5	REC - EQUIPMENT ROOM 101	20 A	1					720 VA	728 VA	1	20 A	GEN - RESTROOM & SHOWER	6
7	REC - OFFICE & HALLWAY	20 A	1	900 VA	1248 VA					2	20 A	HVAC - EF 4-6 (STORAGE ROOM)	8
9	REC - EXTERIOR & ROOF	20 A	1			900 VA	1248 VA						10
11	EQ - ROLL UP DOORS	20 A	2					2484 VA	500 VA	1	20 A	FACP (2)(3)	12
13				2484 VA	500 VA					1	20 A	LCP	14
15	HVAC - CU-2/FCU-2	30 A	2			2288 VA	312 VA			2	20 A	HVAC - CU-3	16
17								2288 VA	312 VA				18
19	GATE OPERATOR 3 AND 4	30 A	1	2000 VA	368 VA					1	20 A	HVAC - EF-3 & LOUVER-6	20
21	HVAC - LOUVERS 1-5	20 A	1			920 VA	2000 VA			1	30 A	GATE OPERATOR 1 AND 2	22
23	IRRIGATION CONTROLLER	20 A	1					500 VA	2288 VA	2	30 A	HVAC - CU-1/FCU-1	24
25	HVAC - LOUVER-7	20 A	1	184 VA	2288 VA								26
27	REC - STORAGE ROOM	20 A	1			1080 VA	4080 VA			3	60 A	HVAC - AC-4	28
29	REC - STORAGE ROOM	20 A	1					1080 VA	4080 VA				30
31	HVAC - AC-3	60 A	3	4080 VA	4080 VA								32
33						4080 VA	184 VA			1	20 A	HVAC - EF-1	34
35								4080 VA	180 VA	1	20 A	EQ - OFFICE REFRIGE.(1)	36
37	EQ - AIR COMPRESSOR	20 A	1	360 VA	360 VA					1	20 A	REC - TTB	38
39	HVAC - CU-4	20 A	2			312 VA	540 VA			1	20 A	REC - WATER SYSTEM MECH...	40
41								312 VA	540 VA	1	20 A	REC - TOOL STORAGE	42
43	(E) SPARE	20 A	1	0 VA	833 VA					3	20 A	EQ - WATER HEATER	44
45	(E) SPARE	20 A	1			0 VA	833 VA						46
47	(E) SPARE	20 A	1					0 VA	833 VA				48
49	(E) SPARE	20 A	1	0 VA	0 VA					1	20 A	(E) SPARE	50
51	(E) SPARE	20 A	1			0 VA	0 VA			1	20 A	(E) SPARE	52
53	(E) SPARE	20 A	1					0 VA	0 VA	1	20 A	(E) SPARE	54
		TOTAL LOAD:		20049 VA		19308 VA		20925 VA					
		TOTAL AMPS:		168 A		161 A		175 A					

LOAD CLASSIFICATION	CONNECTED LOAD	DEMAND FACTOR	EST. DEMAND	PANEL TOTALS	
EQUIPMENT	3360 VA	100.00%	3360 VA		
HVAC	44368 VA	100.00%	44368 VA	TOTAL CONN. LOAD:	59283 VA
Motor	4000 VA	112.50%	4500 VA	TOTAL EST. DEMAND:	60006 VA
Other	0 VA	0.00%	0 VA	TOTAL CONN.:	165 A
RECEPTACLE	6660 VA	100.00%	6660 VA	TOTAL EST. DEMAND:	167 A
LIGHTING	902 VA	125.00%	1127 VA		

NOTES:
(1) PROVIDE GFCI. (2) PROVIDE LOCKABLE CIRCUIT BREAKER. (3) PROVIDE CIRUIT BREAKER OF THE COLOR RED.

LIGHTING CONTROLS:

1. ALL LIGHTING AND CONTROLS SHALL COMPLY WITH THE 2021 IECC.
2. ALL LIGHTING SHALL BE HIGH EFFICIENCY LED.
3. EMERGENCY LIGHTING SHALL BE DENOTED ON PLANS VIA A HALF FILLED BLACK REGION ON LIGHTING FIXTURE.
4. ALL EMERGENCY LIGHTING SHALL BE UL924 EMERGENCY BATTERY BACKUP INTEGRAL TO THE FIXTURE.
5. ALL AUTOMATIC ON / AUTOMATIC OFF CONTROL SYSTEMS SHALL ALSO HAVE MANUAL ON / MANUAL OFF OPTION.
6. PROVIDE EXTERIOR PHOTOCELL ON NORTH FACING WALL OF BUILDING UNDER EAVE. PROVIDE CONTACTOR FOR EXTERIOR LIGHTING CIRCUITS SUCH THAT THE CONTROLS INPUT FROM THE PHOTOCELL SHALL CONTROL THE EXTERIOR LIGHTING.
7. OCCUPANCY
   - LIGHTING IN MULTIPURPOSE ROOMS, MEETING SPACES, AND ADMIN ROOMS, SHALL BE CONTROLLED BY AUTOMATIC OFF/MANUAL ON OCCUPANCY SENSOR CONTROLS. CONTRACTOR SHALL COORDINATE WITH END USER TO SET DELAY TIMES FOR OCCUPANCY SENSORS TO A MAXIMUM OF 20 MINUTES.
8. EXIT SIGNS
   - ALL EXIT SIGNS SHALL BE POWERED THROUGH UNSWITCHED LEG OF CIRCUIT.
9. AREA SPECIFIC CONTROLS
   - EQUIPMENT ROOMS, WATER SYSTEM MECH ROOM AND JANITOR ROOM
     - NO OCCUPANCY CONTROLS.
   - OFFICE
     - ALL LIGHTING SHALL HAVE DIMMING CONTROLS. OWNER SHALL HAVE THE ABILITY TO REDUCE TOTAL LUMEN OUTPUT TO NOT LESS THAN 80 PERCENT AS DESIRED.
     - AUTOMATIC OFF / AUTOMATIC ON OCCUPANCY SENSOR CONTROLS.
   - RESTROOMS AND STORAGE ROOMS
     - AUTOMATIC OFF / AUTOMATIC ON ULTRASONIC OCCUPANCY SENSOR CONTROLS.
   - HALLWAY
     - AUTOMATIC OFF / AUTOMATIC ON OCCUPANCY SENSOR CONTROLS. REDUCE LIGHITNG POWER BY 505 WITHIN 20 MINUTES OF SPACE BEING UNOCCUPIED. OCCUPANCY SENSORS SHALL BE TIED ONLY TO HALLWAY AND BE INDEPENDANT OF ADJACENT STORAGE ROOM.

LIGHTING FIXTURE SCHEDULE

FIXTURE ID	DESCRIPTION	SOURCE	VOLTAGE	LOAD	MOUNTING	MANUFACTURER & MODEL
L1	6" LED DOWNLIGHT, 4000K, DIMMABLE, 970LM, WET LOCATION RATED	LED	120 V	13 VA	CEILING, RECESSED	LITHONIA - WF6-SWW5-90CRI
L1E	6" LED DOWNLIGHT, 4000K, DIMMABLE, 970LM, WET LOCATION RATED, REMOTE 90-MINUTE BATTERY BACKUP	LED	120 V	13 VA	CEILING, RECESSED	LITHONIA - WF6-SWW5-90CRI-EM
L2	24" LINEAR VANITY	LED	120 V	15 VA	WALL, SURFACE	RP LIGHTING - 4907
L3	2X4' TROFFER, 3300LM, REMOTE 90-MINUTE BATTERY BACKUP	LED	120 V	35 VA	CEILING, RECESSED	SYLVANIA - PANELF3S045UNVD8SC724GWH
L4	4' LINEAR PENDANT, 3400LM	LED	120 V	35 VA	CEILING, SUSPENDED / SURFACE	COLUMBIA LIGHITNG - MPS4-35MW-CW-EDU
L4E	4' LINEAR PENDANT, 3400LM, REMOTE 90-MINUTE BATTERY BACKUP	LED	120 V	35 VA	CEILING, SUSPENDED / SURFACE	COLUMBIA LIGHITNG - MPS4-35MW-CW-EDU-ELL14
W1	LED WALL PAK	LED	120 V	11 VA	WALL, SURFACE	LITHONIA LITGHTING - WDGE1 LED P0 40K 80CRI VW
W1E	LED WALL PACK, 90-MINUTE BATTERY BACKUP	LED	120 V	11 VA	WALL, SURFACE	LITHONIA LITGHTING - WDGE1 LED P0 40K 80CRI VW E4WH
X1	SINGLE FACE, GREEN, EXIT SIGN, REMOTE 90-MINUTE BATTERY BACKUP, WET LOCATION LISTED	LED	120 V	2 VA	WALL, SURFACE	CHLORIDE - WLTE-55L-3-G

EQUIPMENT SCHEDULE

EQUIPMENT ID	EQUIPMENT DESCRIPTION	COORDINATING DISCIPLINE	ELECTRICAL DATA (VOLTAGE/POLES-VA)	CONDUIT AND WIRE SIZE	DISCONNECT MEANS OR SIZE	NEMA RATING	FUSE SIZE	NOTES
AC-3	CRAC FAN COIL UNIT	MECHANICAL	208 V/3-12240 VA	70S-4C	60A	1	60A	
AC-4	CRAC FAN COIL UNIT	MECHANICAL	208 V/3-12240 VA	70S-4C	60A	1	60A	
CU-1	CONDENSING UNIT	MECHANICAL	208 V/2-4576 VA	30S-3C	30A	3R	30A	
CU-2	CONDENSING UNIT	MECHANICAL	208 V/2-4576 VA	30S-3C	30A	3R	30A	
CU-3	CRAC CONDENSING UNIT	MECHANICAL	208 V/2-624 VA	20S-3C	30A	3R	15A	
CU-4	CRAC CONDENSING UNIT	MECHANICAL	208 V/2-624 VA	20S-3C	30A	3R	15A	
EF-1	EXHAUST FAN	MECHANICAL	120 V/1-184 VA	20S-2C	MOTOR RATED SWITCH	1	N/A	5A RATED MAXIMUM SWITCH
EF-2	EXHAUST FAN	MECHANICAL	120 V/1-184 VA	20S-2C	MOTOR RATED SWITCH	1	N/A	5A RATED MAXIMUM SWITCH. PROVIDE CONTACTOR TO ALLOW BOTH BATHROOM SWITCHES TO CONTROL EF-2.
EF-3	EXHAUST FAN	MECHANICAL	120 V/1-184 VA	20S-2C	MOTOR RATED SWITCH	1	N/A	5A RATED MAXIMUM SWITCH
EF-4	EXHAUST FAN	MECHANICAL	208 V/2-832 VA	20S-2C	MOTOR RATED SWITCH	1	N/A	5A RATED MAXIMUM SWITCH
EF-5	EXHAUST FAN	MECHANICAL	208 V/2-832 VA	20S-2C	MOTOR RATED SWITCH	1	N/A	5A RATED MAXIMUM SWITCH
EF-6	EXHAUST FAN	MECHANICAL	208 V/2-832 VA	20S-2C	MOTOR RATED SWITCH	1	N/A	5A RATED MAXIMUM SWITCH
FCU-1	FAN COIL UNIT	MECHANICAL	208 V/2-0 VA	N/A	INTEGRAL	N/A	N/A	POWERED BY CU-1. REFER TO MFR FOR INTERCONNECTION REQUIREMENTS
FCU-2	FAN COIL UNIT	MECHANICAL	208 V/2-0 VA	N/A	MOTOR RATED SWITCH	1	N/A	POWERED BY CU-2. REFER TO MFR FOR INTERCONNECTION REQUIREMENTS
IC	IRRIGATION CONTROLLER	IRRIGATION PLANS	120 V/1-500 VA	20S-2C	N/A	3R	N/A	REFER TO SHEET IR-01
L-1	LOUVER	MECHANICAL	120 V/1-184 VA	20S-2C	MOTOR RATED SWITCH	1	N/A	15A RATED MAXIMUM SWITCH
L-2	LOUVER	MECHANICAL	120 V/1-184 VA	20S-2C	MOTOR RATED SWITCH	1	N/A	15A RATED MAXIMUM SWITCH
L-3	LOUVER	MECHANICAL	120 V/1-184 VA	20S-2C	MOTOR RATED SWITCH	1	N/A	15A RATED MAXIMUM SWITCH
L-4	LOUVER	MECHANICAL	120 V/1-184 VA	20S-2C	MOTOR RATED SWITCH	1	N/A	15A RATED MAXIMUM SWITCH
L-5	LOUVER	MECHANICAL	120 V/1-184 VA	20S-2C	MOTOR RATED SWITCH	1	N/A	15A RATED MAXIMUM SWITCH
L-6	LOUVER	MECHANICAL	120 V/1-184 VA	20S-2C	MOTOR RATED SWITCH	1	N/A	15A RATED MAXIMUM SWITCH
L-7	LOUVER	MECHANICAL	120 V/1-184 VA	20S-2C	MOTOR RATED SWITCH	1	N/A	15A RATED MAXIMUM SWITCH
RUD	ROLL UP DOOR	ELECTRICAL	208 V/2-2484 VA	20S-3C	30A	1	FPEN	
WH-1	WATER HEATER	PLUMBING	208 V/3-2500 VA	20S-3C	30A	1	FPEN	

CONSTRUCTION DOCUMENTS

No.	REVISIONS	DATE	BY

Kimley»Horn
EDPT Sign of Quality®

PROFESSIONAL ENGINEER
PETER SYNTAX
0-063343-1B
U.S. VIRGIN ISLANDS

KHA PROJECT 045826000
DATE JUNE 2026
SCALE AS SHOWN
DESIGNED BY SG
DRAWN BY SG
CHECKED BY PS

BUILDING ELECTRICAL SCHEDULES

LBJ PUMP STATION
PREPARED FOR
VIWMA

SHEET NUMBER
EB-07

This document, together with the concepts and designs presented herein, as an instrument of service, is intended only for the specific purpose and client for which it was prepared. Reuse of and improper reliance on this document without written authorization and adaptation by Kimley-Horn and Associates, Inc. shall be without liability to Kimley-Horn and Associates, Inc.

Autodesk Docs://045826000_LBJ Pump Station Saint Croix P24/045826000_BJ pump station Saint Croix_MEP_R24.rvt

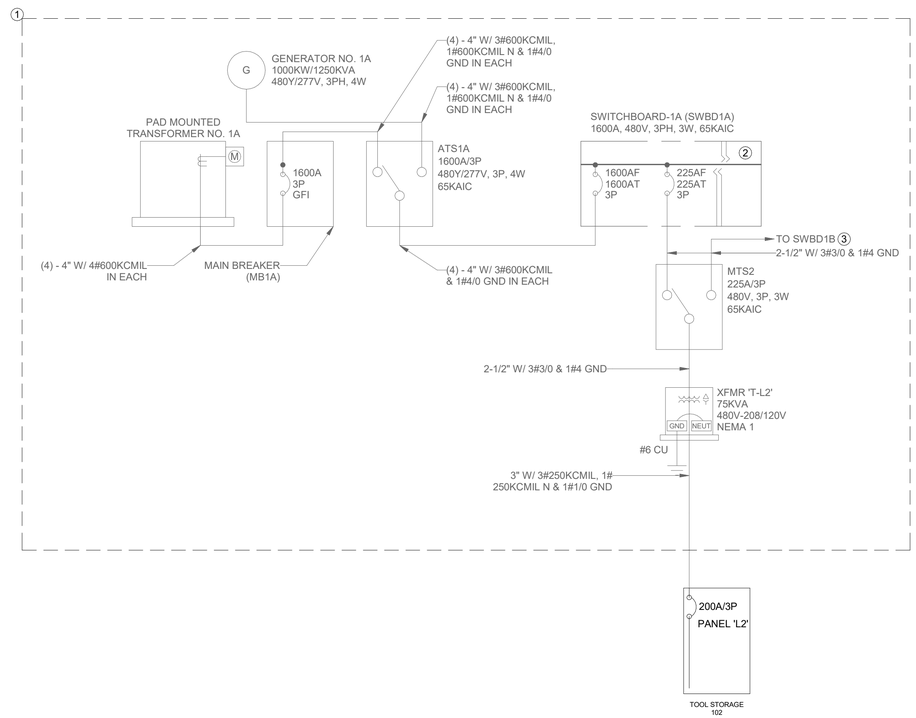

NOTES:

1. ELECTRICAL DISTRIBUTION, VOLTAGE DROP, AND FAULT CURRENT CALCULATION BY OTHERS, SEE SHEETS E-04 AND E-05.
2. SEE SHEETS E-04 AND E-05 BY OTHERS FOR CONTINUATION OF SWBD1A.
3. SEE SHEETS E-04 AND E-05 BY OTHERS FOR CONTINUATION OF SWBD1B.

1 ELECTRICAL SINGLE LINE DIAGRAM - PARTIAL

N.T.S

CONSTRUCTION DOCUMENTS

No.	REVISIONS	DATE	BY

Kimley»Horn

Sign of Quality

PROFESSIONAL ENGINEER
PETER SYNTAX
0-063343-1B
U.S. VIRGIN ISLANDS

KHA PROJECT	045826000
DATE	JUNE 2026
SCALE	AS SHOWN
DESIGNED BY	SG
DRAWN BY	SG
CHECKED BY	PS

BUILDING ELECTRICAL
SINGLE LINE DIAGRAM

LBJ PUMP STATION
PREPARED FOR
VIWMA

SHEET NUMBER
EB-08

This document, together with the concepts and designs presented herein, as an instrument of service, is intended only for the specific purpose and client for which it was prepared. Reuse of and improper reliance on this document without written authorization and adaptation by Kimley-Horn and Associates, Inc. shall be without liability to Kimley-Horn and Associates, Inc.

Autodesk Docs://045826000 - LBJ Pump Station Saint Croix PZA/045826000 LBJ pump station Saint Croix MEP R24.rvt

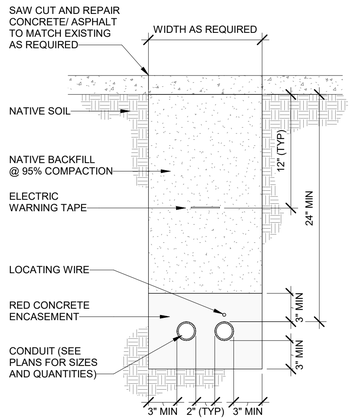

5 TRENCH DETAIL

N.T.S

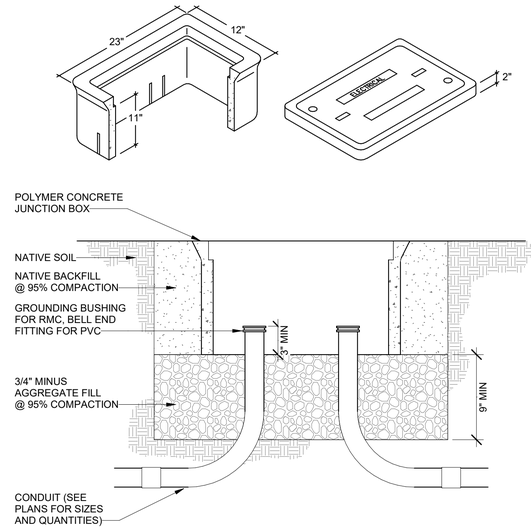

4 PULL BOX DETAIL

N.T.S

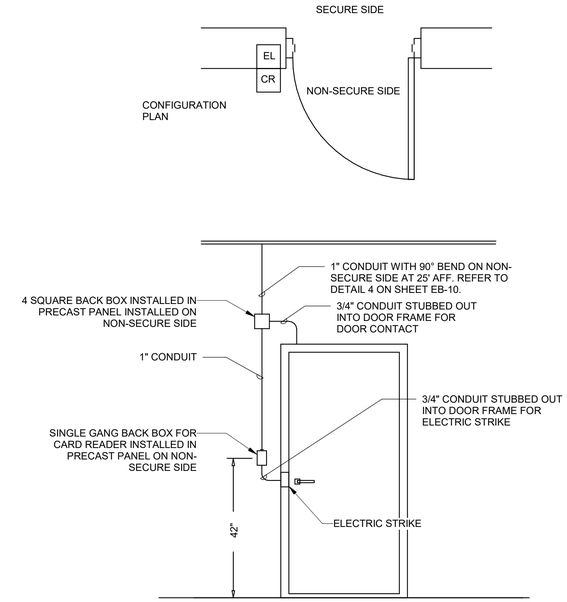

NOTE: ALL CONDUITS AND BACK BOX SHALL BE EMBEDDED IN THE WALL DURING CONSTRUCTION.

FUNCTIONALITY:
IN THE NORMAL STATE THE DOOR IS CLOSED, LOCKED ON THE UNSECURED SIDE AND UNLOCKED ON THE SECURED SIDE. DOOR SHALL FAIL SECURE.

3 ACCESS CONTROL - SECURE IN SINGLE DOOR DETAIL

N.T.S

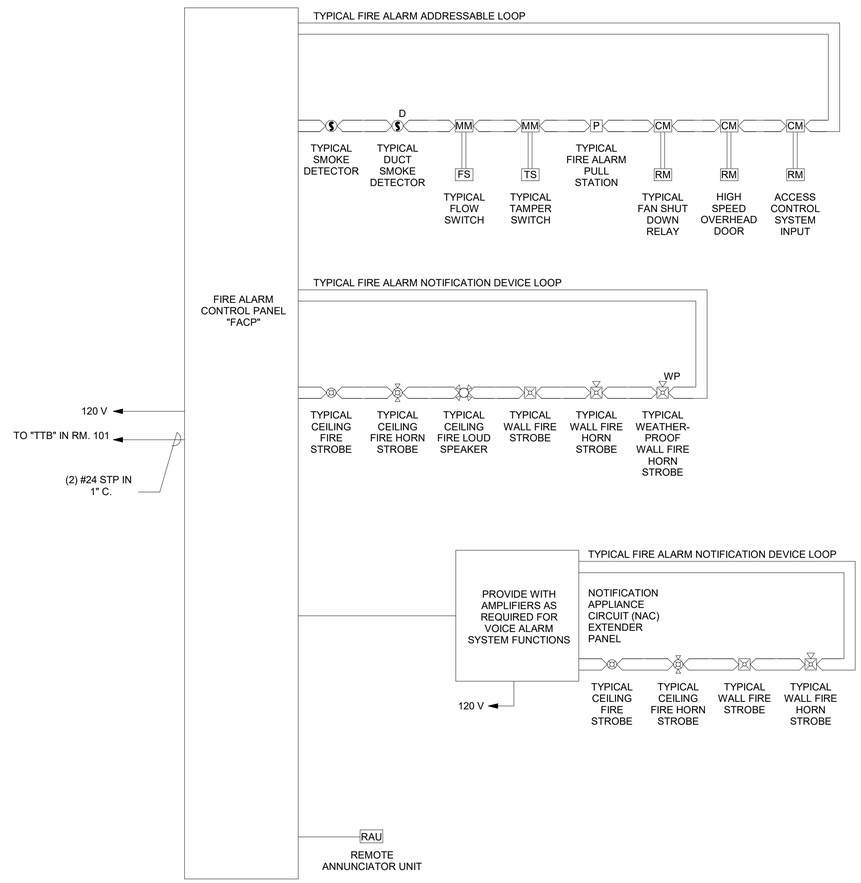

1 FIRE ALARM RISER DIAGRAM

N.T.S

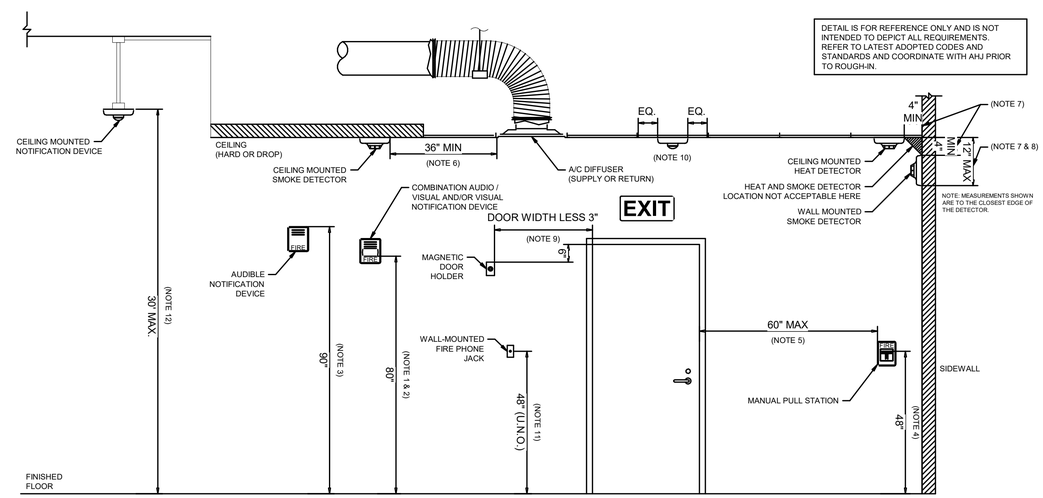

NOTES:
1. 80" ABOVE THE HIGHEST FLOOR LEVEL WITHIN THE SPACE OR 6" BELOW THE CEILING, WHICHEVER IS LOWER.
2. 80" MIN AND 96" MAX ABOVE FINISHED FLOOR.
3. 90" MIN ABOVE FINISHED FLOOR AND 6" MIN BELOW FINISHED CEILING.
4. TOP OF OPERATING HANDLE SHALL BE 48" MAX ABOVE FINISHED FLOOR FOR FORWARD REACH, 54" MAX ABOVE FINISHED FLOOR FOR SIDE REACH, AND 15" MIN ABOVE FINISHED FLOOR.
5. WITHIN 60" OF EXIT DOORWAYS.
6. DO NOT LOCATE IN A DIRECT AIRFLOW OR CLOSER THAN 38" MIN FROM AN AIR SUPPLY DIFFUSER OR RETURN AIR OPENING.
7. HEAT DETECTORS: 4" MIN FROM THE SIDEWALL OR BETWEEN 4" AND 12" FROM CEILING.
8. SMOKE DETECTORS: 12" MAX DOWN FROM CEILING.
9. REFER TO MANUFACTURER'S INSTALLATION MANUAL FOR SPECIFIC REQUIREMENTS AND MODIFY ACCORDINGLY.
10. CENTER CEILING MOUNTED DEVICES IN CEILING TILES.
11. NOT LESS THAN 36" AND NOT MORE THAN 66" ABOVE FLOOR LEVEL WITH CLEAR ACCESS TO THE APPLIANCE THAT IS AT LEAST 30" WIDE.
12. NOTIFICATION DEVICES SHALL NOT BE MOUNTED ABOVE +30' AFF. PROVIDE MOUNTING APPARATUS AS REQUIRED.

2 FIRE ALARM DEVICE MOUNTING HEIGHTS

N.T.S

CONSTRUCTION DOCUMENTS

No.	REVISIONS	DATE	BY

Kimley»Horn

Sign of Quality

PROFESSIONAL ENGINEER
PETER SYNTAX
0-063343-1B
U.S. VIRGIN ISLANDS

KHA PROJECT	045826000
DATE	JUNE 2026
SCALE	AS SHOWN
DESIGNED BY	SG
DRAWN BY	SG
CHECKED BY	PS

BUILDING ELECTRICAL DETAILS

LBJ PUMP STATION
PREPARED FOR
VIWMA

SHEET NUMBER
EB-09

This document, together with the concepts and designs presented herein, as an instrument of service, is intended only for the specific purpose and client for which it was prepared. Reuse of and improper reliance on this document without written authorization and adaptation by Kimley-Horn and Associates, Inc. shall be without liability to Kimley-Horn and Associates, Inc.

Autodesk Docs://045826000 - LBJ Pump Station Saint Croix R24/045826000 - BJ pump station Saint Croix MEP R24.rvt

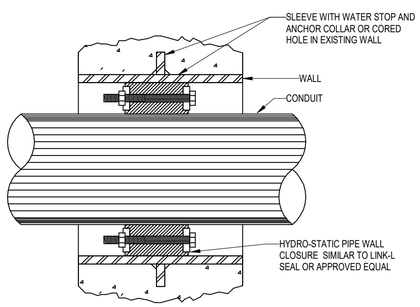

1 FOUNDATION WALL CONDUIT PENETRATION DETAIL

N.T.S

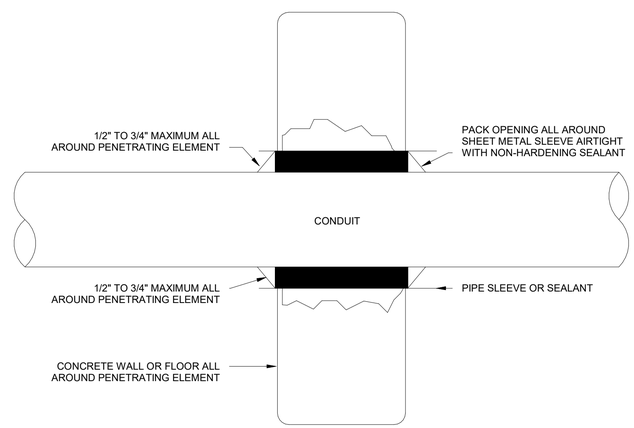

2 NON-RATED CONDUIT PENETRATION DETAIL

N.T.S

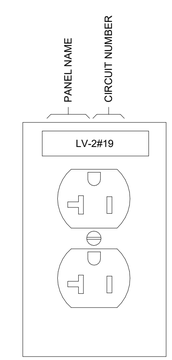

3 RECEPTACLE LABEL DETAIL

N.T.S

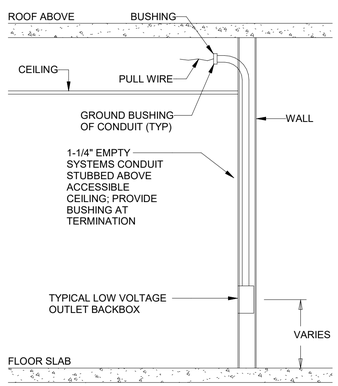

4 LOW VOLTAGE JUNCTION BOX DETAIL

N.T.S

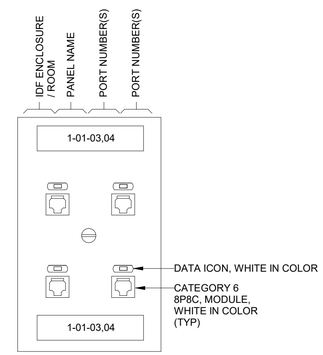

5 LOW VOLTAGE LABEL DETAIL

N.T.S

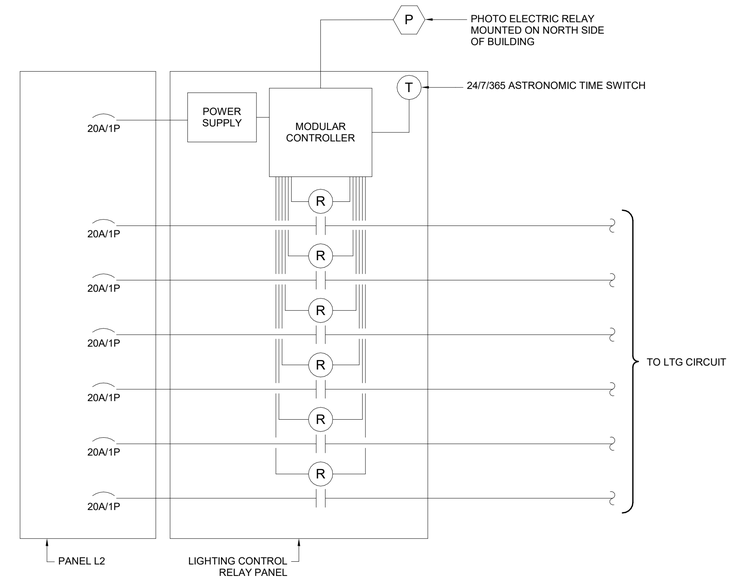

NOTES:

1. CONTRACTOR SHALL VERIFY ALL CIRCUIT INFORMATION AND CONFIRM LOADS ON PANEL, PRIOR TO CONNECTING CIRCUITS. PROVIDE AND INSTALL NEW CABLING TO NEW EQUIPMENT AND PROVIDE UPDATED PANEL SCHEDULE AS NECESSARY.

6 TYPICAL LIGHTING CONTROL PANEL DETAIL

N.T.S

CONSTRUCTION DOCUMENTS

No.	REVISIONS	DATE	BY

Kimley»Horn

EDPT Sign of Quality

PROFESSIONAL ENGINEER PETER MARTIN SYNTAX 0-063343-1B U.S. VIRGIN ISLANDS

KHA PROJECT 045826000

DATE JUNE 2026

SCALE AS SHOWN

DESIGNED BY SG

DRAWN BY SG

CHECKED BY PS

BUILDING ELECTRICAL DETAILS

LBJ PUMP STATION
PREPARED FOR
VIWMA

SHEET NUMBER
EB-10

This document, together with the concepts and designs presented herein, as an instrument of service, is intended only for the specific purpose and client for which it was prepared. Reuse of and improper reliance on this document without written authorization and adaptation by Kimley-Horn and Associates, Inc. shall be without liability to Kimley-Horn and Associates, Inc.

Autodesk Docs://045826000 - LBJ Pump Station Saint Croix P24/045826000 LBJ pump station Saint Croix MEP P24.rvt

Autodesk Docs://045826000 St Croix LBJ Pump Station/LBJ Sewershed -Structural Set.rvt
This document, together with the concepts and designs presented herein, as an instrument of service, is intended only for the specific purpose and client for which it was prepared. Reuse of and improper reliance on this document without written authorization and adaptation by Kimley-Horn and Associates, Inc. shall be without liability to Kimley-Horn and Associates, Inc.

GENERAL NOTES

1. THESE NOTES ARE NOT INTENDED TO REPLACE THE PROJECT SPECIFICATIONS OR CONSTRUCTION DRAWING NOTES & DETAILS. IN CASE OF CONFLICT BETWEEN THE REQUIREMENTS OF THE SPECIFICATIONS/CONSTRUCTION DRAWINGS AND THESE NOTES, THE MORE STRINGENT REQUIREMENT SHALL APPLY.
2. THE GOVERNING CODE FOR THIS PROJECT IS THE 2021 INTERNATIONAL BUILDING CODE.
3. THE CONTRACT DOCUMENTS HAVE MADE NO INTENT TO GIVE SPECIFIC INSTRUCTIONS CONCERNING THE MEANS, METHODS, TECHNIQUES, SEQUENCES, PROCEDURES AND ASSIGNMENT OF WORK.
4. THE CONTRACTOR SHALL BE SOLELY RESPONSIBLE FOR SUPERVISING AND DIRECTING THE WORK. TO THE BEST OF OUR KNOWLEDGE, THE DRAWINGS AND SPECIFICATIONS COMPLY WITH THE APPLICABLE REQUIREMENTS OF THE GOVERNING BUILDING CODE.
5. CONSTRUCTION SHALL COMPLY WITH REQUIREMENTS OF THE GOVERNING BUILDING CODE AND ALL OTHER APPLICABLE FEDERAL, STATE AND LOCAL CODES, STANDARDS, REGULATIONS AND LAWS.
6. THE STRUCTURAL DRAWINGS ARE TO BE USED IN CONJUNCTION WITH THOSE OF THE OTHER TRADES. IF A CONFLICT EXISTS, THE MORE STRINGENT REQUIREMENT SHALL APPLY.
7. CONTRACTOR SHALL VISIT PROJECT SITE AND BE FAMILIAR WITH THE PROPOSED WORK. TAKE FIELD MEASUREMENTS AND VERIFY ALL FIELD CONDITIONS, AND REPORT ANY DISCREPANCIES TO THE ENGINEER PRIOR TO CONSTRUCTION.
8. CONTRACTOR SHALL REVIEW ALL CONTRACT DOCUMENTS, DIMENSIONS AND SITE CONDITIONS AND COORDINATE WITH FIELD DIMENSIONS AND PROJECT SHOP DRAWINGS PRIOR TO CONSTRUCTION. THE CONTRACTOR SHALL VERIFY ALL DIMENSIONS GIVEN ON STRUCTURAL DRAWINGS RELATING TO GRID LINES, COLUMN AND WALL LOCATIONS, STRUCTURAL AND FINISHED FLOOR ELEVATIONS, MEMBER SIZES, ETC, WITH THE DRAWINGS OF OTHER TRADES BEFORE STARTING ANY WORK. REPORT ANY DISCREPANCIES VERBALLY AND IN WRITING IMMEDIATELY TO ENGINEER PRIOR TO PROCEEDING WITH WORK. WORK SHALL NOT COMMENCE UNTIL THE DISCREPANCIES ARE RESOLVED. DO NOT CHANGE SIZE OR DIMENSIONS OF STRUCTURAL MEMBERS WITHOUT WRITTEN INSTRUCTIONS FROM THE PROJECT ENGINEER OF RECORD.
9. DISCREPANCIES, OMISSIONS OR VARIATIONS NOTED ON THE DRAWINGS OR IN THE SPECIFICATIONS DISCOVERED DURING AND AFTER THE BIDDING PERIOD SHALL BE IMMEDIATELY COMMUNICATED IN WRITING TO THE ENGINEER.
10. CONTRACTOR SHALL PROTECT EXISTING FACILITIES, STRUCTURES AND UTILITY LINES FROM DAMAGE AND SHALL PROTECT THIER WORK, ADJACENT PROPERTY AND THE PUBLIC. CONTRACTOR IS SOLELY RESPONSIBLE FOR JOB SITE SAFETY, CONSTRUCTION PROCEDURES AND DAMAGE OR INJURY DUE TO THEIR ACT OR NEGLECT.
11. CONTRACTOR SHALL SUITABLY DOCUMENT EXISTING CONDITIONS PRIOR TO COMMENCEMENT OF THE WORK, AND SHALL RESTORE ALL DAMAGED OR DISTURBED AREAS TO MEET OR EXCEED ORIGINAL SITE CONDITIONS TO THE OWNER'S SATISFACTION.
12. DO NOT REPRODUCE THE STRUCTURAL DRAWINGS FOR USE AS ERECTION, PLACING, FABRICATION OR SHOP DRAWINGS.
13. SCALING OF DRAWINGS SHALL NOT BE USED TO OBTAIN OR VERIFY ANY DIMENSION SHOWN ON THE DRAWINGS. THE CONTRACTOR SHALL REFER TO THE ENGINEER FOR INSTRUCTION FOR ANY DIMENSION NOT GIVEN ON DRAWINGS.
14. SEE DRAWINGS OF OTHER TRADES FOR SIZE AND LOCATION OF POSSIBLE ADDITIONAL OPENINGS IN STRUCTURES NOT SHOWN IN STRUCTURAL DRAWINGS.
15. DETAILS LABELED "TYPICAL DETAILS" ON THE DRAWINGS APPLY TO ALL SITUATIONS THAT ARE THE SAME OR SIMILAR TO THOSE SPECIFICALLY DETAILED. SUCH DETAILS APPLY WHETHER OR NOT THEY ARE KEYED IN AT EACH LOCATION. QUESTIONS REGARDING APPLICABILITY OF TYPICAL DETAILS SHALL BE RESOLVED BY THE ENGINEER.
16. CONTRACTOR SHALL PROVIDE 48 HOURS MINIMUM ADVANCE NOTICE TO ENGINEER FOR ALL REQUIRED FIELD REVIEWS.
17. CONTRACTOR SHALL COORDINATE WITH OWNER ALL ITEMS TO BE CONTRACTED, SUPPLIED OR INSTALLED BY OWNER.
18. CONTRACTOR IS RESPONSIBLE FOR ALL BUILDING, PERMIT, REVIEW, LICENSE AND DEVELOPMENT FEES REQUIRED TO COMPLETE THE PROJECT.
19. CONTRACTOR SHALL ASSEMBLE AND INSTALL MATERIALS AND PRODUCTS IN STRICT ACCORDANCE WITH THE MANUFACTURER'S INSTRUCTIONS AND WITH INDUSTRY/ASSOCIATION STANDARDS.
20. MATERIALS OR WORK DESCRIBED IN WORDS WHICH HAVE A WELL-KNOWN TECHNICAL TRADE MEANING SHALL BE HELD TO REFER TO THE RECOGNIZED STANDARD. ALL MATERIALS SHALL BE NEW, U.O.N.
21. PROVIDE FIRE STOPPERS AND SEAL ALL PIPE AND CONDUIT PENETRATIONS THROUGH FIRE RATED FLOORS, WALLS AND CEILINGS IN ORDER TO PREVENT THE PASSAGE OF SMOKE OR FIRE. ALL SEALANTS AND RELATED PRODUCTS SHALL COMPLY WITH THE MINIMUM FIRE RATED REQUIREMENTS FOR THE FLOORS, WALLS AND CEILINGS. ONLY NON-COMBUSTIBLE MATERIALS SHALL BE USED AT PENETRATIONS.
22. MINOR DEVIATIONS FROM THE DESIGN LAYOUT ARE ANTICIPATED AND SHALL BE CONSIDERED AS PART OF THE WORK, HOWEVER, NO CHANGES THAT ALTER THE CHARACTER INTENT OF THE DESIGN WILL BE MADE WITHOUT A CHANGE ORDER.

UTILITIES

1. CONTRACTOR SHALL LOCATE IN THE FIELD ALL UTILITIES OCCURRING WITHIN THE LIMITS OF EXCAVATION.
2. DATA CONCERNING TYPE AND LOCATION OF UNDERGROUND AND OTHER UTILITIES IS NOT GUARANTEED TO BE ACCURATE OR ALL-INCLUSIVE. THE CONTRACTOR IS RESPONSIBLE FOR MAKING THEIR OWN DETERMINATIONS AS TO THE TYPE AND LOCATION OF UNDER GROUND AND OTHER UTILITIES AS MAY BE NECESSARY TO AVOID DAMAGE THERETO.

DOCUMENTS AND LIMITATIONS

1. THE DRAWINGS, CALCULATIONS, AND REPRODUCTIONS RELATING TO THE STRUCTURAL PART OF THE PROJECT ARE INSTRUMENTS OF SERVICE TO BE USED FOR THIS PROJECT ONLY.
2. IT IS UNDERSTOOD THAT THE ENGINEER MAKES NO WARRANTY, EITHER EXPRESSED OR IMPLIED, AS TO THE FINDINGS, DESIGNS, RECOMMENDATIONS, SPECIFICATIONS, OR PROFESSIONAL ADVICE EXCEPT THAT THESE INSTRUMENTS OF SERVICE HAVE BEEN PREPARED IN ACCORDANCE WITH CURRENT GENERALLY ACCEPTED PROFESSIONAL ENGINEERING PRACTICES.

TEMPORARY WALLS

1. CONTRACTOR SHALL SUBMIT, IN THE FORM OF A SHOP DRAWING, THE DESIGN AND LAYOUT OF ANY TEMPORARY SHEETPILE WALLS REQUIRED FOR CONSTRUCTION. SUBMITTED DOCUMENTS SHALL BE SIGNED AND SEALED BY A PROFESSIONAL ENGINEER LICENSED IN THE U.S. VIRGIN ISLANDS.
2. WHERE TEMPORARY WALLS ARE TO BE INSTALLED NEAR OR ADJACENT TO EXISTING STRUCTURES OR UTILITIES, CONTRACTOR SHALL USE DUE CAUTION AS TO NOT DAMAGE SUCH EXISTING STRUCTURES OR UTILITIES.

RECORD DRAWINGS

1. CONTRACTOR SHALL PREPARE AND MAINTAIN CURRENT A SET OF REDLINED DRAWINGS SHOWING ALL DEVIATIONS AND CHANGES MADE TO THE CONSTRUCTION DRAWINGS
2. DRAWINGS SHALL BE MADE AVAILABLE TO THE ENGINEER FOR REVIEW UPON REQUEST AT ANY TIME DURING THE COURSE OF THE PROJECT.
3. CONTRACTOR SHALL SUBMIT THE ORIGINAL DRAWINGS TO THE ENGINEER WITHIN ONE WEEK FROM THE DATE OF FINAL COMPLETION, AND PRIOR TO OWNER'S ACCEPTANCE OF CONTRACTOR'S FINAL INVOICE.
4. SUBMITTED DRAWINGS WILL REMAIN THE PROPERTY OF THE ENGINEER.

SHOP DRAWINGS AND OTHER SUBMITTALS

1. REVIEW OF SUBMITTALS BY THE ENGINEER IS FOR GENERAL CONFORMANCE WITH THE DESIGN CONCEPT AS PRESENTED BY THE CONTRACT DOCUMENTS. NO DETAILED CHECK OF QUANTITIES OR DIMENSIONS WILL BE MADE. ONLY THOSE SUBMITTALS REQUIRED TO BE SUBMITTED WILL BE REVIEWED. ALL OTHERS WILL BE RETURNED WITHOUT REVIEW.
2. ALL SUBMITTALS SHALL BE ACCOMPANIED BY A LETTER OF TRANSMITTAL. CONTRACTOR'S SUBMITTAL NUMBER SHALL BE INDICATED ON TRANSMITTAL. DO NOT COMBINE DIFFERENT SUBMITTALS ON THE SAME TRANSMITTAL. SUBMIT SHOP DRAWINGS IN A TIMELY MANNER, CONSISTENT WITH THE ABOVE, AND PRIOR TO FABRICATION, INSTALLATION OR COMMENCEMENT OF THE WORK. ALLOW UP TO 10 WORKING DAYS FOR ENGINEER TO REVIEW AND RETURN SHOP DRAWINGS. NUMBER OF COPIES OF EACH SUBMITTED SHOP DRAWING SHALL BE SUFFICIENT FOR ENGINEER TO RETAIN 2 COPIES.
3. ALL SUBMITTALS MUST BEAR EVIDENCE OF CONTRACTOR'S REVIEW (INCLUDING COMPANY STAMP AND DATED SIGNATURE OF REVIEWER) AND MUST BE APPROVED OR APPROVED AS NOTED BY HIM PRIOR TO SUBMITTING TO THE ENGINEER.
4. ALL CHANGES AND ADDITIONS MADE ON RESUBMITTALS MUST BE CLEARLY FLAGGED AND NOTED. THE PURPOSE OF THE RESUBMITTALS MUST BE CLEARLY NOTED ON THE LETTER OF TRANSMITTAL. ENGINEER REVIEW WILL BE LIMITED TO THOSE ITEMS CAUSING THE RESUBMITTAL.
5. DO NOT REPRODUCE THE STRUCTURAL DRAWINGS FOR USE AS ERECTION, PLACING OR FABRICATION DRAWINGS.
6. SUBMITTALS NOT MEETING THE ABOVE CRITERIA OR SUBMITTED AFTER FABRICATION WILL NOT BE REVIEWED.
7. SUBMITTALS:
   AS A MINIMUM, THE FOLLOWING SHALL BE SUBMITTED, AS APPLICABLE, TO THE ENGINEER FOR REVIEW AND COMPLIANCE WITH THE INTENT OF THE CONTRACT DOCUMENTS PRIOR TO FABRICATION, INSTALLATION, OR COMMENCEMENT OF THE WORK:
   A. CONCRETE, MORTAR AND GROUT MIX DESIGNS, INCLUDING ADMIXTURE DATA SHEETS.
   B. BILL OF REINFORCING AND LAYOUT.
   C. MISCELLANEOUS METAL FABRICATIONS.
   D. HANDRAIL, GUARDRAIL AND LADDER DETAILS, INCLUDING SUPPORT MEMBERS CONNECTIONS, AND CALCULATIONS, JOINT LAYOUT PLAN AND MATERIALS.
   E. PAINT, SEALANT, TOPPINGS AND OTHER FINISH PRODUCTS.
   F. SHORING.
   G. TEMPORARY RETAINING WALL DESIGN DRAWINGS AND CALCULATIONS.

   IN ADDITION, CUT SHEETS FOR WATERPROOFING, VAPOR BARRIERS, WATER STOPS, PROPRIETARY ANCHORS, FASTENERS, OTHER STANDARD ATTACHMENTS, EXPANSION JOINTS, MORTAR, BONDING AGENT, DOORS, WINDOWS, INSULATION, AND OTHER MATERIALS AND APPROPRIATE CERTIFICATIONS SHALL ALSO BE SUBMITTED.
8. WELDER CERTIFICATIONS FOR ALL WELDERS SHALL BE SUBMITTED. CERTIFICATIONS MUST HAVE BEEN ISSUED WITHIN 3 YEARS PRIOR TO PERFORMING WORK ON THE PROJECT.
9. REQUESTS FOR SUBSTITUTIONS SHALL BE SUBMITTED IN WRITING TO THE ENGINEER FOR REVIEW. SUBMIT 3 COPIES OF ALL PRODUCT DATA AND CUT SHEETS AS NECESSARY TO SHOW COMPLIANCE WITH THE PROJECT REQUIREMENTS. CONTRACTOR SHALL BEAR THE BURDEN OF OBTAINING AUTHORIZATION FOR USE OF ITEMS TO BE SUBSTITUTED. ENGINEER'S DECISION REGARDING SUBSTITUTION SHALL BE FINAL.
10. FOR ADDITIONAL CRITERIA APPLICABLE TO SUBMITTALS REQUIRING ENGINEERING INPUT BY A DELEGATED ENGINEER, SEE THE FOLLOWING.

SUBMITTALS REQUIRING ENGINEERING INPUT BY DELEGATED (SPECIALTY) ENGINEER

1. DELEGATED ENGINEER:
   A. DEFINITION - A U.S. VIRGIN ISLANDS PROFESSIONAL ENGINEER WHO UNDERTAKES A SPECIALTY SERVICE AND PROVIDES SERVICES OR CREATIVE WORK (DELEGATED ENGINEERING DOCUMENT) REGARDING A PORTION OF THE ENGINEERING PROJECT. THE DELEGATED ENGINEER IS THE ENGINEER OF RECORD FOR THAT PORTION OF THE ENGINEERING PROJECT.
   B. SHALL BE: (1) AN INDEPENDENT CONSULTANT, (2) AN EMPLOYEE OR OFFICER OF AN ENTITY SUPPLYING COMPONENTS TO A FABRICATOR OR CONTRACTOR, SO LONG AS THE ENGINEER ACTS AS AN INDEPENDENT CONSULTANT OR THROUGH A DULY QUALIFIED ENGINEERING CORPORATION, OR (3) AN EMPLOYEE OR OFFICER OF A FABRICATOR OR CONTRACTOR, SO LONG AS THE ENGINEER ACTS AS AN INDEPENDENT CONSULTANT OR THROUGH A DULY QUALIFIED ENGINEERING CORPORATION.
2. SUBMITTALS FOR CUSTOM DESIGNED, MANUFACTURED OR FABRICATED LOAD-CARRYING ITEMS AND CUSTOM FABRICATED ITEMS WHICH ARE REQUIRED BY CODES OR STANDARDS TO RESIST FORCES AND STRESSES, INCLUDING THEIR CONNECTIONS, ANCHORAGES AND ATTACHMENTS REQUIRE A DELEGATED ENGINEER.
3. AS A MINIMUM, THE FOLLOWING SYSTEMS AND COMPONENTS REQUIRE FABRICATION AND ERECTION DRAWINGS WITH INPUT BY A DELEGATED ENGINEER:
   A. REDESIGN OF ANY STRUCTURAL ELEMENTS OR CONNECTIONS.
   B. TEMPORARY SHORING.
   C. HANDRAILS, GUARDRAILS, CATWALK/WALKWAYS, LADDERS, GRATING AND STAIRS.
   D. PRECAST VORTEX FILTER CONCRETE VAULT
   E. HOLLOW CORE ROOF PLANKS
4. FOR EACH CATEGORY OF SUBMITTALS REQUIRING INPUT FROM A DELEGATED ENGINEER, THE CONTRACTOR SHALL ATTACH TO THE FIRST SUBMITTAL A SIGNED AND SEALED LETTER FROM THE RESPONSIBLE DELEGATED ENGINEER STATING "I CERTIFY THAT THE DESIGN AND DRAFTING OF THE SHOP DRAWINGS WHICH ARE SIGNED AND SEALED BY ME WERE PREPARED UNDER MY DIRECT SUPERVISION AND CONTROL, AND TO THE BEST OF MY KNOWLEDGE, THE SHOP DRAWINGS COMPLY WITH THE APPLICABLE MINIMUM BUILDING CODES AND THE CONTRACT DOCUMENTS."
5. SUBMITTALS SHALL CLEARLY IDENTIFY THE SPECIFIC PROJECT AND APPLICABLE CODES, LIST THE DESIGN CRITERIA, AND SHOW ALL DETAILS AND PLANS NECESSARY FOR PROPER FABRICATION AND INSTALLATION. CALCULATIONS AND SHOP DRAWINGS SHALL IDENTIFY SPECIFIC PRODUCTS UTILIZED. GENERIC PRODUCTS WILL NOT BE ACCEPTED.
6. SHOP DRAWINGS AND CALCULATIONS REQUIRE THE SEAL, DATE AND SIGNATURE OF THE DELEGATED ENGINEER. COMPUTER PRINTOUTS ARE AN ACCEPTABLE SUBSTITUTE FOR MANUAL COMPUTATIONS PROVIDED THEY ARE ACCOMPANIED BY SUFFICIENT DESCRIPTIVE INFORMATION TO PERMIT THEIR PROPER EVALUATION. SUCH DESCRIPTIVE INFORMATION SHALL BEAR THE SEAL AND SIGNATURE OF THE DELEGATED ENGINEER AS AN INDICATION THAT THEY HAVE ACCEPTED RESPONSIBILITY FOR THE RESULTS.
7. CALCULATIONS ARE THE SOLE RESPONSIBILITY OF THE DELEGATED ENGINEER. CALCULATIONS ARE SUBMITTED TO THE ENGINEER FOR HIS RECORDS.
8. CATALOG INFORMATION ON STANDARD PRODUCTS (i. e. "CUT SHEETS") DOES NOT REQUIRE THE SEAL OF A DELEGATED ENGINEER.
9. REVIEW BY THE PROJECT ENGINEER OF RECORD OF SUBMITTALS IS LIMITED TO VERIFYING THE FOLLOWING:
   A. THAT THE SPECIFIED STRUCTURAL SUBMITTALS HAVE BEEN FURNISHED.
   B. THAT THE STRUCTURAL SUBMITTALS HAVE BEEN SIGNED AND SEALED BY THE DELEGATED ENGINEER.
   C. THAT THE DELEGATED ENGINEER HAS UNDERSTOOD THE DESIGN INTENT AND HAS USED THE SPECIFIED STRUCTURAL CRITERIA. (NO DETAILED CHECK OF CALCULATIONS WILL BE MADE.)
   D. THAT THE CONFIGURATION SET FORTH IN THE STRUCTURAL SUBMITTALS IS CONSISTENT WITH THE CONTRACT DOCUMENTS. (NO DETAILED CHECK OF DIMENSIONS OR QUANTITIES WILL BE MADE.)
10. SUBMITTALS NOT MEETING THE ABOVE CRITERIA, OR SUBMITTED AFTER FABRICATION, WILL NOT BE REVIEWED.

FOUNDATIONS AND SLABS

1. FOUNDATION AND SLAB DESIGN IS BASED ON A REPORT OF GEOTECHNICAL EXPLORATION PREPARED BY VITEST ENGINEERS, LLC, DATED JANUARY 7, 2025 (PROJECT NO. VTE24-01.1149).
2. FOUNDATION AND SLAB CONSTRUCTION, SITE PREPARATION AND SOIL PREPARATION BELOW FOUNDATIONS AND SLABS SHALL BE PERFORMED IN ACCORDANCE WITH GEOTECHNICAL REPORT RECOMMENDATIONS.
3. FOUNDATIONS AND SLABS SHALL BE SUPPORTED ON COMPACTED MATERIAL WITH A MINIMUM SOIL BEARING CAPACITY OF 3500 PSF, U.O.N.
4. THE CONTRACTOR SHALL NOTIFY THE ENGINEER IMMEDIATELY OF ANY EXISTING FOUNDATION OR SLAB CONDITIONS OR DETAILS THAT ARE IN CONFLICT WITH THOSE INDICATED AND SHOWN ON THE DRAWINGS.
5. THE CONTRACTOR SHALL BE RESPONSIBLE FOR THE PROTECTION, SHORING, UNDERPINNING, AND ISOLATION, ETC. OF ALL EXISTING FOUNDATION AND SLAB CONDITIONS AS REQUIRED TO PREVENT ANY DISTURBANCE TO EXISTING FOUNDATION CONDITIONS AS A RESULT OF THE WORK.
6. ANCHOR BOLTS SIDE SLEEVES AND OTHER EMBEDDED ITEMS ARE TO BE PLACED IN ACCORDANCE WITH THE CONTRACT DOCUMENTS.
7. TO HELP CONTROL SHRINKAGE CRACKS, AT SLAB ON GRADE PENETRATIONS COMPRISED OF BOX-OUTS AND CLOSELY SPACED OR BUNDLED CONDUITS, PIPES, ETC., PROVIDE DIAGONAL #4 BARS ABOUT PERIMETER OF PENETRATION AREA IN ADDITION TO TYPICAL SLAB REINFORCEMENT. ORIENT BARS NORMAL TO ANTICIPATED PATH OF CRACK FORMATION. BAR ENDS SHALL EXTEND 12 INCHES MINIMUM BEYOND OVERLAPS WITH ADJACENT BARS. PROVIDE 2 INCH CLEAR COVER TO TOP SURFACE OF SLAB.
8. CHAIR WELDED WIRE FABRIC (WWF) AND REINFORCING BARS DURING CONCRETE PLACEMENT TO ENSURE PROPER POSITION IN SLAB. CHAIRS SHALL BE OF NON-CORROSIVE MATERIAL INCLUDING, BUT NOT LIMITED TO, FIBERGLASS, PLASTIC, AND CONCRETE BLOCK.
9. ALL SOIL BENEATH BUILDING FOUNDATIONS AND SLABS SHALL BE TREATED FOR SUBTERRANEAN TERMITE PREVENTION BY A LICENSED PEST CONTROL COMPANY. THE PEST CONTROL COMPANY SHALL PROVIDE A CERTIFICATE OF COMPLIANCE TO THE CONTRACTOR FOR SUBMITTAL TO THE OWNER AND LOCAL BUILDING DEPARTMENT IF REQUIRED. TREATMENT SHALL PRECEDE CONCRETE POUR BY NO MORE THAN 72 HOURS.
10. FOUNDATIONS AND SLABS SHALL BE WET CURED FOR A MINIMUM OF 7 DAYS PRIOR TO FURTHER CONSTRUCTION.
11. CRACK CONTROL JOINTS SHALL BE SAWCUT IN ACCORDANCE WITH ACI 301 AND ACI 302. COMPLETE SAWCUTTING WITHIN 12 HOURS AFTER CONCRETE PLACEMENT.
12. CRACK CONTROL JOINTS FOR FOUNDATIONS AND SLABS SHALL BE PLACED AS NOTED IN THE CONSTRUCTION PLANS.
13. PLACE CRACK CONTROL JOINTS AT 10 FEET MAX. SPACING FOR SIDEWALKS AND/OR WALKWAYS, SUCH THAT THE LENGTH-TO-WIDTH RATIO IS LESS THAN 1.5.
14. SEE "REINFORCED CONCRETE" NOTES FOR ADDITIONAL INFORMATION PERTAINING TO CONCRETE AND REINFORCEMENT.

REINFORCED CONCRETE

1. ALL CONCRETE MATERIALS, PLACING AND HANDLING SHALL BE IN ACCORDANCE WITH AMERICAN CONCRETE INSTITUTE PUBLICATIONS ACI 301, ACI 318 AND ACI 350 - LATEST EDITIONS.
2. CURING OF CONCRETE SHALL BE IN STRICT ACCORDANCE WITH ACI 301 PROVISIONS.
3. STRUCTURAL CONCRETE SHALL HAVE A MINIMUM 28-DAY COMPRESSIVE STRENGTH OF THE FOLLOWING:.
   A. WET WELLS, CISTERN AND OTHER LIQUID RETAINING STRUCTURES, INCLUDING THE FOUNDATIONS: 5,000 PSI (MAX. W/CM=0.40)
   B. ALL OTHER STRUCTURAL CONCRETE: 4,000 PSI (MAX. W/CM=0.45)
4. USE NORMAL WEIGHT CONCRETE (145 PCF MIN.) FOR ALL STRUCTURAL MEMBERS. DO NOT USE CALCIUM CHLORIDE IN ANY CONCRETE.
5. PROVIDE A 4 INCH SLUMP WITH A TOLERANCE OF +/- 1 INCH. FOR WALLS 8 INCHES OR LESS IN THICKNESS, PROVIDE 5 INCH SLUMP WITH A TOLERANCE OF +1/2 INCH AND -1 INCH.
6. IF CONCRETE IS PUMPED, SLUMP MAY BE INCREASED TO 6 INCHES AT THE TRUCK, PROVIDED THE SLUMP SPECIFIED ABOVE IS MAINTAINED AT THE DISCHARGE END. USE A MINIMUM 4 INCH PUMP. FOR PUMPED CONCRETE, TAKE CONCRETE SAMPLES FOR SLUMP TEST AT END OF TRUCK CHUTE AND AT DISCHARGE END OF HOSE, AND TAKE SAMPLES FOR CYLINDER TESTING AT DISCHARGE END OF HOSE.
7. WATER SHALL NOT BE ADDED TO CONCRETE AT THE JOBSITE UNLESS SPECIFIC AUTHORIZATION IS INDICATED ON THE DELIVERY TICKET. NOTIFY ENGINEER OF TOTAL QUANTITY OF WATER ADDED TO ANY TRUCK, REPEAT NECESSARY TESTING IF WATER IS ADDED AFTER INITIAL SAMPLING.
8. WET WELL BEARING STRUCTURES SHALL UTILIZE A XYPEX ADMIXTURE IN ACCORDANCE WITH SPECIFICATION 07 16 16.
9. COARSE AGGREGATE SHALL CONFORM TO ASTM C33. PEA ROCK AGGREGATE SHALL NOT BE USED.
10. ALL ANCHOR BOLTS SHALL BE ACCURATELY SET WITHIN A TOLERANCE OF +/- 1/16 INCH IN BOTH ELEVATION AND LOCATION.
11. ALL CONCRETE SHALL BE PLACED IN THE DRY. ALL FORMS SHALL BE FREE OF STANDING WATER.
12. ALL CONCRETE SHALL BE VIBRATED IN PLACE IN ACCORDANCE WITH ACI RECOMMENDED PRACTICES. NO PLACING OF CONCRETE WILL BE COMMENCED UNLESS THERE ARE A MINIMUM OF TWO OPERABLE CONCRETE VIBRATORS ON THE JOB SITE.
13. CONCRETE COVER OVER REINFORCING STEEL SHALL BE AS FOLLOWS, U.O.N.:
   A. CONCRETE CAST AGAINST EARTH: 3 IN.
   B. ALL OTHER CONCRETE: 2 IN.
14. PROVIDE 3/4 INCH CHAMFERS ON ALL EXPOSED EDGES, EXCEPT AS OTHERWISE NOTED.
15. FORM TIES AND REINFORCING BAR SUPPORTS SHALL BE OF NON-CORROSIVE MATERIAL INCLUDING, BUT NOT LIMITED TO, FIBERGLASS, PLASTIC, AND CONCRETE BLOCK. BAR SUPPORTS PLACED ATOP VAPOR BARRIERS SHALL BE CONCRETE BLOCK.
16. ANY TIES, STRAPS OR OTHER METALLIC FORMWORK ITEMS SHALL BE REMOVED TO A DEPTH OF 1-1/2 INCHES MINIMUM BELOW FINISHED CONCRETE SURFACE. CONCRETE SHALL BE REPAIRED IN ACCORDANCE WITH ACI 301.
17. CONCRETE FINISHES:
   A. FORMED SURFACES SHALL RECEIVE A SMOOTH-FORM FINISH IN ACCORDANCE WITH ACI 301. OFFSET BETWEEN ADJACENT PIECES OF FORMWORK FACING MATERIAL SHALL NOT EXCEED "CLASS A" TOLERANCE REQUIREMENTS OF ACI 117 (i.e. 1/8 INCH MAX. OFFSET).
   B. SLAB SURFACES SHALL RECEIVE A TROWELED FINISH IN ACCORDANCE WITH ACI 301. FINISH TOLERANCES SHALL BE IN ACCORDANCE WITH "VERY FLAT" CLASSIFICATION REQUIREMENTS OF ACI 117 (i.e. 1/8 INCH MAX. IN 10 FEET).
   C. WHERE A NON-SLIP FINISH IS REQUIRED (WALKWAY SURFACES), GIVE THE SURFACE A BROOM FINISH OR DRY-SHAKE APPLICATION OF FINELY CRUSHED ABRASIVE PARTICLES.
18. COORDINATE SIZE, TYPE AND LOCATION OF ALL PENETRATIONS, CONDUIT, CHAMFERS AND EMBEDDED ITEMS PRIOR TO CONCRETE PLACEMENT.
19. DO NOT IMPOSE SERVICE LOADS ON CONCRETE ELEMENTS UNTIL THE CONCRETE HAS REACHED ITS SPECIFIED MINIMUM COMPRESSIVE STRENGTH.
20. ALL GROUT FOR BASE PLATES SHALL BE HIGH STRENGTH NON-SHRINK, NON-METALLIC.
21. CONTRACTOR SHALL SUBMIT A CONSTRUCTION JOINT PLAN FOR THE ENGINEER'S REVIEW PRIOR TO CONSTRUCTION.

WELDED WIRE FABRIC (WWF)

1. WWF SHALL BE IN ACCORDANCE WITH ASTM A185, PLAIN (SMOOTH) TYPE, IN FLAT SHEETS.
2. ALL WWF SHALL BE ACCURATELY PLACED, RIGIDLY SUPPORTED AND FIRMLY TIED IN PLACE WITH BAR SUPPORTS AND SPACERS. DO NOT PLACE WWF ON GRADE AND SUBSEQUENTLY RAISE INTO POSITION DURING CONCRETE PLACEMENT.
3. FOR SLABS ON GRADE, EXTEND WWF TO WITHIN 2 INCHES OF THE CONCRETE EDGE.
4. LAP EDGES AND ENDS OF WWF SHEETS A MINIMUM OF ONE MESH SPACING PLUS 2 INCHES.
5. LOCATE WWF 2 INCHES BELOW THE TOP SURFACE OF THE SLAB.
6. SEE "SLABS ON GRADE" NOTES ABOVE FOR ADDITIONAL REINFORCEMENT REQUIRED AT SLAB PENETRATIONS.

CONSTRUCTION DOCUMENTS

No.	REVISIONS	DATE	BY

Kimley»Horn
Sign of Quality

PROFESSIONAL ENGINEER
JON CASEY LONG
0-10005-1B
VIRGIN ISLANDS
07-13-26

KHA PROJECT	045826000
DATE	JUNE, 2026
SCALE: AS SHOWN	
DESIGNED BY:	SES
DRAWN BY:	NDO
CHECKED BY:	SES

STRUCTURAL GENERAL NOTES

LBJ SEWERSHED REHABILITATION
PREPARED FOR
VIWMA

SHEET NUMBER
S-01

Autodesk Docs://045826000 St Croix LBJ Pump Station LBJ Sewershed -Structural Set/4
This document, together with the concepts and designs presented herein, as an instrument of service, is intended only for the specific purpose and client for which it was prepared. Reuse of and improper reliance on this document without written authorization and adaptation by Kimley-Horn and Associates, Inc. shall be without liability to Kimley-Horn and Associates, Inc.

ALUMINUM
1. ALUMINUM FABRICATION SHALL BE IN CONFORMANCE WITH THE ALUMINUM ASSOCIATION, INC. "SPECIFICATIONS FOR ALUMINUM STRUCTURES" (LATEST EDITION).
2. UNLESS NOTED OTHERWISE, MATERIALS SHALL BE:
   A. PLATE & SHEET - ASTM B209; 6061-T6, 6061-T651 ALLOY.
   B. EXTRUDED SHAPES - ASTM B221; 6061-T6, 6061-T651 ALLOY. PIPE SECTIONS ARE SCHEDULE 40 U.N.O..
   C. CASTINGS - ASTM B108; 214 ALLOY.
3. ALUMINUM SHALL BE SEPARATED FROM DIRECT CONTACT WITH OTHER MATERIALS (STEEL, CONCRETE, ETC.) BY PRESSURE SENSITIVE TAPE, BITUMASTIC COATING, OR OTHER PROTECTIVE METHOD SUBMITTED BY THE CONTRACTOR AND APPROVED BY THE OWNER'S CONSTRUCTION REPRESENTATIVE.
4. WELDING ALUMINUM SHALL CONFORM TO AWS D1.2 & AWS A5.10 AND THE REQUIREMENTS OF THE ALUMINUM ASSOCIATIONS "ALUMINUM DESIGN MANUAL" (LATEST EDITION) TABLE 7.1-1 FOR WELD FILLERS FOR WROUGHT ALLOYS.
5. REFERENCE PROJECT SPECIFICATIONS FOR HANDRAIL & GUARDRAIL REQUIREMENTS.
6. FASTENERS: UNLESS NOTED OTHERWISE, ALL FASTENERS SHALL BE TYPE 316 STAINLESS STEEL MEETING THE REQUIREMENTS OF ASTM F593 OR ASTM A193 FOR BOLTS AND ASTM F594 OR ASTM A194 FOR NUTS.

FORM WORK AND SHORING
1. PROVIDE, AS A PACKAGE, SHORING DRAWINGS PREPARED BY OR UNDER THE DIRECT SUPERVISION OF A DELEGATED ENGINEER.
2. FORMS SHALL CONFORM TO THE SHAPE, LINES AND DIMENSIONS OF THE MEMBERS AS CALLED FOR IN THE PLANS, AND SHALL BE SUBSTANTIAL AND SUFFICIENTLY TIGHT TO PREVENT LEAKAGE OF MORTAR. THEY SHALL BE PROPERLY BRACED OR TIED TOGETHER SO AS TO MAINTAIN POSITION AND SHAPE.
3. DESIGN FORMS AND SHORES FOR HORIZONTAL CONCRETE MEMBERS FOR ALL IMPOSED DEAD AND LIVE LOADS, BUT NOT LESS THAN DEAD LOAD (INCLUDING FILL HEIGHTS IF APPLICABLE) PLUS AASHTO HS20-44 TRUCK CONSTRUCTION LIVE LOAD, WHERE APPLICABLE. DESIGN WOOD SHORES WITH A SAFETY FACTOR OF 3, AND METAL SHORES WITH A SAFETY FACTOR OF 2.
4. REMOVAL OF FORMWORK IS THE SOLE RESPONSIBILITY OF THE CONTRACTOR, HOWEVER FORMS SHALL NOT BE REMOVED LESS THAN 24 HOURS AFTER CONCRETE PLACEMENT. REMOVE FORMS IN SUCH A MANNER AS TO ENSURE JOB SAFETY AND TO PREVENT DAMAGE TO AND CREEP DEFLECTION OF THE STRUCTURE.
5. THE SHORING IS TO BE INSPECTED BY THE DELEGATED ENGINEER OR THEIR AUTHORIZED REPRESENTATIVE. PRIOR TO EACH CONCRETE POUR, HE SHALL SUBMIT A WRITTEN INSPECTION REPORT TO THE SPECIAL INSPECTOR AND CONTRACTOR STATING THAT THE WORK IS IN GENERAL COMPLIANCE WITH THE SHORING DRAWINGS. THE FIELD REPORTS SHALL BE SIGNED BY THE INDIVIDUAL CONDUCTING THE INSPECTION. COPIES OF THE FIELD REPORTS SHALL BE SUBMITTED EVERY WEEK TO THE ENGINEER, SPECIAL INSPECTOR AND BUILDING OFFICIAL UNDER A COVER LETTER SIGNED, SEALED AND DATED BY THE DELEGATED ENGINEER.
6. THE SHORING REPORT SHALL CONTAIN, AS A MINIMUM, THE FOLLOWING:
   A. NAME AND LOCATION OF PROJECT, NAME OF DELEGATED ENGINEER AND FIELD REPRESENTATIVE, PERMIT NUMBER, DATE, TIME OF DAY, WORKING CONDITIONS (INCLUDING WEATHER AND TEMPERATURE).
   B. ITEMS REQUIRING CORRECTIONS.
   C. ACCEPTED DEVIATIONS FROM SHORING DRAWINGS.
   D. AREAS ACCEPTED AND RELEASED FOR CONCRETE POURS.
7. AS SOON AS FORMS ARE REMOVED, ALL IRREGULAR PROJECTIONS SHALL BE CHIPPED OFF FLUSH WITH THE CONCRETE SURFACES. ALL VOIDS OR HONEYCOMBING SHALL BE POINTED UP WITH GROUT AND TROWELED FLUSH WITH THE CONCRETE SURFACE. ALL FORM TIES SHALL BE REMOVED TO A DEPTH OF 1-1/2 INCHES MINIMUM AND GROUTED FLUSH WITH THE CONCRETE SURFACE.

STRUCTURAL STEEL
1. DESIGN, FABRICATE AND ERECT STRUCTURAL STEEL IN CONFORMANCE WITH AMERICAN INSTITUTE OF STEEL CONSTRUCTION (AISC) "STEEL CONSTRUCTION MANUAL" - CURRENT EDITION, "CODE OF STANDARD PRACTICE FOR STEEL BUILDINGS AND BRIDGES" - CURRENT EDITION, AND SPECIFICATION FOR STRUCTURAL STEEL BUILDINGS" - CURRENT EDITION.
2. VERIFY ALL DIMENSIONS AS REQUIRED PRIOR TO FABRICATION OF ANY STRUCTURAL STEEL.
3. MATERIALS:
   - ROUND HSS SHALL CONFORM TO ASTM A500 OR. B (Fy=42 KSI, Fu=58 KSI), U.O.N.
   - RECTANGULAR AND SQUARE HSS SHALL CONFORM TO ASTM A500 OR. B (Fy=46 KSI, Fu=58 KSI), U.O.N.
   - STEEL PIPE SHALL CONFORM TO ASTM A53 GR. B (Fy=35 KSI, Fu=60 KSI).
   - STRUCTURAL PLATES SHALL CONFORM TO ASTM A36 (Fy= 36 KSI, Fu= 58 KSI).
   - STRUCTURAL W-SHAPES SHALL CONFORM TO ASTM A992 (Fy=50 KSI, Fu=65 KSI).
   - STRUCTURAL CHANNELS SHALL CONFORM TO ASTM A36 (Fy=36 KSI, Fu=58 KSI).
   - ANGLES SHALL CONFORM TO ASTM A36 (Fy= 36 KSI, Fu=58 KSI).
   - BOLTS SHALL CONFORM TO ASTM A325-X, TYPE 1.
   - ANCHOR RODS SHALL CONFORM TO ASTM F1554, GR. 55 MINIMUM.
4. BOLTS FOR CONNECTIONS SHALL BE INSTALLED IN ACCORDANCE WITH AISC "SPECIFICATION FOR STRUCTURAL JOINTS USING ASTM A325 OR A490 BOLTS - 2004." UNLESS OTHERWISE NOTED, ALL BOLTS SHALL BE PROVIDED WITH HEAVY HEX NUTS CONFORMING TO ASTM A563, AND HARDENED.
5. STEEL WASHERS CONFORMING TO ASTM F436. PLACE HARDENED WASHERS UNDER PART BEING TURNED.
6. PROVIDE ALL BOLTS, NUTS AND WASHERS IN SETS THAT ARE NEW AND DOMESTICALLY MANUFACTURED. DO NOT REUSE BOLTS.
7. HOT DIP GALVANIZE ALL STRUCTURAL STEEL, FASTENERS, AND MISCELLANEOUS METAL FABRICATIONS IN ACCORDANCE WITH ASTM A123 OR ASTM A153, AS APPLICABLE. TOUCH UP ALL FIELD WELDS AND ABRADED AREAS WITH TWO COATS OF GALVANIZED PAINT. REPAIR OF ABRADED OR UNCOATED AREAS SHALL CONFORM TO ASTM A780.
8. USE STRUCTURAL STEEL THAT IS FULLY WELDABLE WITHIN GRADES AND FROM ANY GRADE TO ANY OTHER GRADE. WELD ALL SHOP CONNECTIONS, U.O.N.
9. USE ELECTRODES CONFORMING TO AWS D1.1, E70 SERIES, U.O.N.
10. ALL WELDING SHALL BE DONE BY AN AWS CERTIFIED WELDER AND IN COMPLIANCE WITH AWS D1.1. ALL WELD SIZES SHALL BE THE MAXIMUM ALLOWED BY THE MATERIAL BEING WELDED WITH E70XX ELECTRODES.
11. AT THE CONTRACTOR'S OPTION, SUBSTITUTION OF SHOP WELDS FOR FIELD WELDS MAY BE REQUESTED. ALL SUCH SUBSTITUTIONS SHALL BE CLEARLY NOTED ON THE SHOP DRAWINGS AND SUBMITTED TO THE ENGINEER FOR REVIEW.
12. CAP OR SEAL ALL PIPES AS REQUIRED TO PREVENT RAINWATER INTRUSION.
13. AT THE CONTRACTOR'S OPTION, FIELD SPLICES MAY BE REQUESTED FOR ERECTION PURPOSES. ALL SUCH SPLICES SHALL BE CLEARLY NOTED ON THE SHOP DRAWINGS AND SUBMITTED TO THE ENGINEER FOR REVIEW. FOR EACH PROPOSED SPLICE LOCATION, SUBMIT STRUCTURAL DESIGN CALCULATIONS AND DETAILS SIGNED AND SEALED BY A PROFESSIONAL ENGINEER LICENSED IN THE U.S. VIRGIN ISLANDS.
14. CONNECTIONS NOT DETAILED IN THE STRUCTURAL DRAWINGS AT THE TIME DRAWINGS ARE ISSUED FOR CONSTRUCTION SHALL BE DESIGNED AND DETAILED BY FABRICATOR ACCORDING TO AISC SPECIFICATIONS.
15. ALL STRUCTURAL STEEL SHALL BE FABRICATED TO FIT AT BOLTED CONNECTIONS WITHIN 1/16 INCH TOLERANCE. MISSING OR MISALIGNED BOLT HOLES SHALL BE CORRECTED BY DRILLING OR PUNCHING. FLAME CUTTING OF NEW BOLT HOLES OR FOR ENLARGING EXISTING HOLES WILL NOT BE PERMITTED. MINIMUM EDGE DISTANCE REQUIREMENTS SHALL CONFORM TO AISC SPECIFICATIONS.
16. SEE DRAWINGS OF OTHER TRADES FOR MISCELLANEOUS STRUCTURAL STEEL NOT SHOWN ON STRUCTURAL DRAWINGS.
17. SUBMIT STRUCTURAL STEEL SHOP DRAWINGS TO ENGINEER FOR REVIEW PRIOR TO FABRICATION. DO NOT REPRODUCE THE STRUCTURAL DRAWINGS FOR USE AS SHOP DRAWINGS.

CLEAN -UP
1. THE CONTRACTOR SHALL AT ALL TIMES KEEP THE SITE FREE FROM ACCUMULATION OF WASTE MATERIALS OR RUBBISH CAUSED BY THEIR EMPLOYEES.
2. CONTRACTOR SHALL VISUALLY INSPECT INTERIOR AND EXTERIOR SURFACES AND REMOVE ALL TRACES OF SOIL, WASTE MATERIALS, SMUDGES, STAINS, SPLASHED MATERIAL, PAINT DROPPINGS AND OTHER FOREIGN MATTER PRIOR TO COMPLETION OF THE WORK.

DESIGN LOADS
1. SEE INDIVIDUAL PLAN SHEETS FOR DESIGN CRITERIA APPLICABLE TO SPECIFIC SITE COMPONENTS.
2. LOADS SHALL MEET THE MINIMUM DESIGN REQUIREMENTS SET FORTH IN THE 2021 INTERNATIONAL BUILDING CODE, UNLESS A MORE STRINGENT REQUIREMENT IS INDICATED.
3. FILL HEIGHTS AS SHOWN ON THE PLANS.
4. IT IS THE CONTRACTOR'S RESPONSIBILITY TO PROVIDE FOR SUPPORTING OF CONSTRUCTION LOADS THAT EXCEED THE ABOVE LOADINGS.

CODES:
2021 INTERNATIONAL BUILDING CODE

WIND LOADS-PER ASCE 7-16:
ULTIMATE WIND SPEED = 180 MPH
RISK CATEGORY III
EXPOSURE D

ENCLOSED BUILDING
INTERNAL PRESSURE COEFFICIENTS: ± 0.18

DEAD LOAD:

SEWAGE	63.6 PSF
HOLLOW CORE PLANKS W/ 2" TOPPING	85 PSF
SDL (ROOF)	5 PSF
SELF-WEIGHT OF MATERIALS	

LIVE LOAD:

CATWALK	60 PSF
STAIRS	100 PSF
TANK WALKWAYS	100 PSF
TANK ELEVATED SLABS	200 PSF
FLOOR (BUILDING)	100 PSF
ROOF (BUILDING)	20 PSF
WET WELL TOP SLAB	300 PSF

SEISMIC:
IMPORTANCE FACTOR = 1.25
SITE CLASS BC
DESIGN CATEGORY D
S_{DS} = 0.51
S_{D1} = 0.19
S_S = 0.85
S_1 = 0.28
S_{MS} = 0.76
S_{M1} = 0.28
PGA = 0.35
T_L = 12s

DEFLECTION LIMIT FOR GRATING AND WALKWAYS = 0.25"

ABBREVATIONS

ALT	ALTERNATE
A.F.F.	ABOVE FINISH FLOOR
BOT	BOTTOM
C.J.	CONTROL JOINT
CL	CENTERLINE
CLR	CLEAR
CMU	CONCRETE MASONRY UNIT
CONC	CONCRETE
CONST	CONSTRUCTION
CONT	CONTINUOUS
DIA.	DIAMETER
DIAG	DIAGONAL
EA	EACH
E.F.	EACH FACE
E.J.	EXPANSION JOINT
EL.	ELEVATION
EOR	ENGINEER OF RECORD
EQ	EQUAL
E.W.	EACH WAY
F.F.E.	FINISHED FLOOR ELEVATION MAX.
FG	FINISHED GRADE
F.V.	FIELD VERIFY
HORIZ	HORIZONTAL
JT	JOINT
MAX	MAXIMUM
MIN.	MINIMUM
M.O.	MASONRY OPENING
NTS.	NOT TO SCALE
O.C., O/C	ON CENTER
PROJ	PROJECTION
P.T.	PRESERVATIVE TREATED
REF	REFERENCE
REINF	REINFORCEMENT
SIM	SIMILAR
SOG	SLAB ON GRADE
SS	STAINLESS STEEL
STD	STANDARD
T&B	TOP & BOTTOM
TOS	TOP OF SLAB
TOF	TOP OF FOUNDATION
TOW	TOP OF WALL
TYP.	TYPICAL
U.O.N	UNLESS OTHERWISE NOTED
VERT	VERTICAL
W/CM	WATER CEMENT RATIO
W.P.	WORK POINT

REINFORCING STEEL
1. REINFORCING STEEL SHALL BE OF DOMESTIC MANUFACTURE AND IN ACCORDANCE WITH ASTM A615 WITH SUPPLEMENT, GRADE 60; MAXIMUM WORKING STRESS OF 24,000 PSI.
2. TOLERANCES FOR REINFORCING BAR FABRICATION SHALL CONFORM TO THE CURRENT CRSI MANUAL OF STANDARD PRACTICE.
3. ALL REINFORCING STEEL SHALL BE UNCOATED (BLACK) DEFORMED BARS AND SHALL BE FREE FROM LOOSE RUST, SCALE OR OTHER COATINGS.
4. ALL REINFORCING STEEL SHALL BE ACCURATELY PLACED, RIGIDLY SUPPORTED AND FIRMLY TIED IN PLACE WITH BAR SUPPORTS AND SPACERS. VERIFY THAT PLACEMENT OF REINFORCING STEEL WILL NOT CONFLICT WITH SUBSEQUENT INSTALLATION OF ANCHOR BOLTS, FASTENERS OR FIELD-DRILLED COMPONENTS.
5. UNLESS OTHERWISE NOTED, LAP BOTTOM STEEL OVER STRUCTURAL SUPPORTS AND TOP STEEL AT MIDSPAN.
6. ALL LAP LENGTHS SHALL BE IN ACCORDANCE WITH ACI 318, ACI 350, ACI 530 AND CRSI STANDARD PRACTICES LATEST EDITIONS, U.O.N.
7. HOOK DISCONTINUOUS ENDS OF ALL TOP BARS AND ALL BARS IN WALLS U.O.N.
8. ACI STANDARD HOOKS SHALL BE USED AS A MINIMUM, U.O.N.
9. ALL DIMENSIONS PERTAINING TO LOCATION OF REINFORCING BARS ARE TO CENTERLINE OF BARS EXCEPT WHERE THE CLEAR DIMENSION IS SHOWN TO FACE OF CONCRETE.
10. SUBMIT SHOP DRAWINGS TO ENGINEER FOR REVIEW PRIOR TO FABRICATING REINFORCING STEEL. DO NOT REPRODUCE THE STRUCTURAL DRAWINGS FOR USE AS PLACING DRAWINGS OR SHOP DRAWINGS.
11. PROVIDE CONSTRUCTION JOINTS IN ACCORDANCE WITH ACI 318 AND SUBMIT DRAWINGS SHOWING LOCATIONS AND DIRECTION OF POUR FOR ENGINEER'S REVIEW. PROVIDE KEYWAYS, WATERSTOPS AND ADEQUATE DOWELS AT ALL CONSTRUCTION JOINTS IN ACCORDANCE WITH THE STRUCTURAL DRAWINGS.
12. PROVIDE REINFORCING STEEL ERECTOR WITH A SET OF STRUCTURAL DRAWINGS FOR FIELD USE. INSPECT REINFORCING STEEL PLACEMENT FROM SHOP DRAWINGS.

COMPONENT AND CLADDING DESIGN
WIND PRESSURES (PSF)
ROOF SURFACE PRESSURES

AREA	10 SF		100 SF		500 SF	
ZONE 1	34.8	-136.5	27.6	-106.6	27.6	-85.7
ZONE 1'	34.8	-78.4	27.6	-78.4	27.6	-53.0
ZONE 2	34.8	-180.0	27.6	-141.6	27.6	-114.7
ZONE 3	34.8	-245.4	27.6	-168.5	27.6	-114.7

COMPONENT AND CLADDING DESIGN
WIND PRESSURES (PSF)
PARAPET SURFACE PRESSURES

AREA	10 SF		100 SF		200 SF	
ZONE 2	234.1	-138.2	183.7	-115.0	168.5	-108.0
ZONE 3	299.9	-158.0	210.8	-123.1	184.0	-112.6

COMPONENT AND CLADDING DESIGN
WIND PRESSURES (PSF)
WALL SURFACE PRESSURES

AREA	10 SF		100 SF		200 SF	
ZONE 4	78.4	-84.9	66.9	-73.4	63.4	-69.9
ZONE 5	78.4	-104.5	66.9	-81.5	63.4	-74.5

NOTES:
1. TABLE PRESSURES ARE FOR THE SQUARE FOOT (SF) TRIBUTARY AREA SHOWN. FOR OTHER TRIBUTARY AREAS, LINEARLY INTERPOLATE BETWEEN VALUES SHOWN ABOVE.
2. POSITIVE PRESSURES ACT TOWARD THE BUILDING. NEGATIVE PRESSURES ACT AWAY FROM THE BUILDING.
3. SEE DIAGRAMS FOR LOCATION OF ZONES.
4. PRESSURES SHOWN ARE ULTIMATE PRESSURES, MULTIPLY BY 0.6 FOR NOMINAL PRESSURES

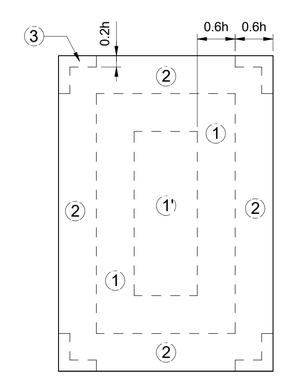

ROOF

0.6h = 7.5 FT
0.2h = 2.5 FT
a = 5 FT

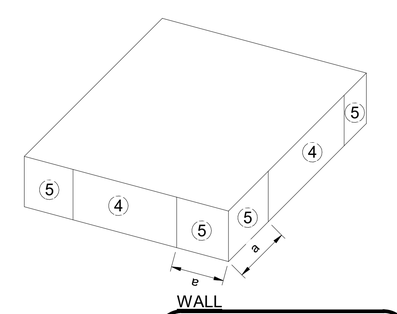

WALL

CONSTRUCTION DOCUMENTS

No.	REVISIONS	DATE	BY

Kimley»Horn

PROFESSIONAL ENGINEER
JON CASEY LONG
0-10005-1B
U.S. VIRGIN ISLANDS
07-13-26

KHA PROJECT 045826000
DATE JUNE, 2026
SCALE: AS SHOWN
DESIGNED BY: SES
DRAWN BY: NJD
CHECKED BY: SES

STRUCTURAL GENERAL NOTES

LBJ SEWERSHED REHABILITATION
PREPARED FOR
VIWMA

SHEET NUMBER
S-02

GRAPHIC SCALE IN FEET
0 10' 20' 40'

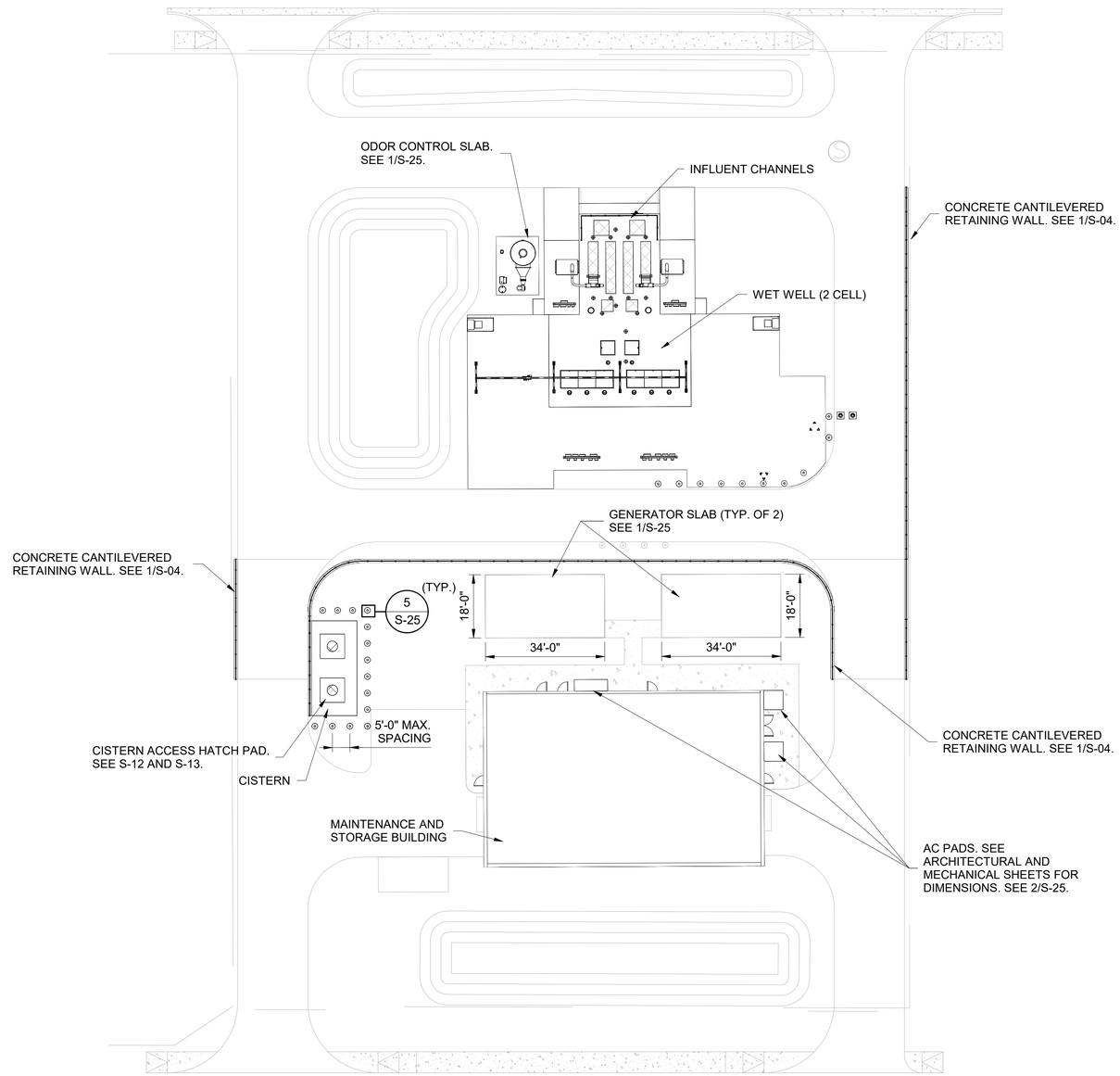

1
S-03
STRUCTURAL SITE PLAN
1" = 20'-0"

NORTH

CONSTRUCTION DOCUMENTS

No.	REVISIONS	DATE	BY

Kimley»Horn

PROFESSIONAL ENGINEER
JON CASEY LONG
O-10005-1B
U.S. VIRGIN ISLANDS
07-13-26

KHA PROJECT 045826000	
DATE JUNE, 2026	
SCALE: AS SHOWN	
DESIGNED BY:	SES
DRAWN BY:	NJD
CHECKED BY:	SES

STRUCTURAL SITE PLAN

LBJ SEWERSHED REHABILITATION
PREPARED FOR
VIWMA

SHEET NUMBER
S-03

Autodesk Docs://045826000 St Croix LBJ Pump Station/LBJ_Sewershed -Structural Set.rvt
This document, together with the concepts and designs presented herein, as an instrument of service, is intended only for the specific purpose and client for which it was prepared. Reuse of and improper reliance on this document without written authorization and adaptation by Kimley-Horn and Associates, Inc. shall be without liability to Kimley-Horn and Associates, Inc.

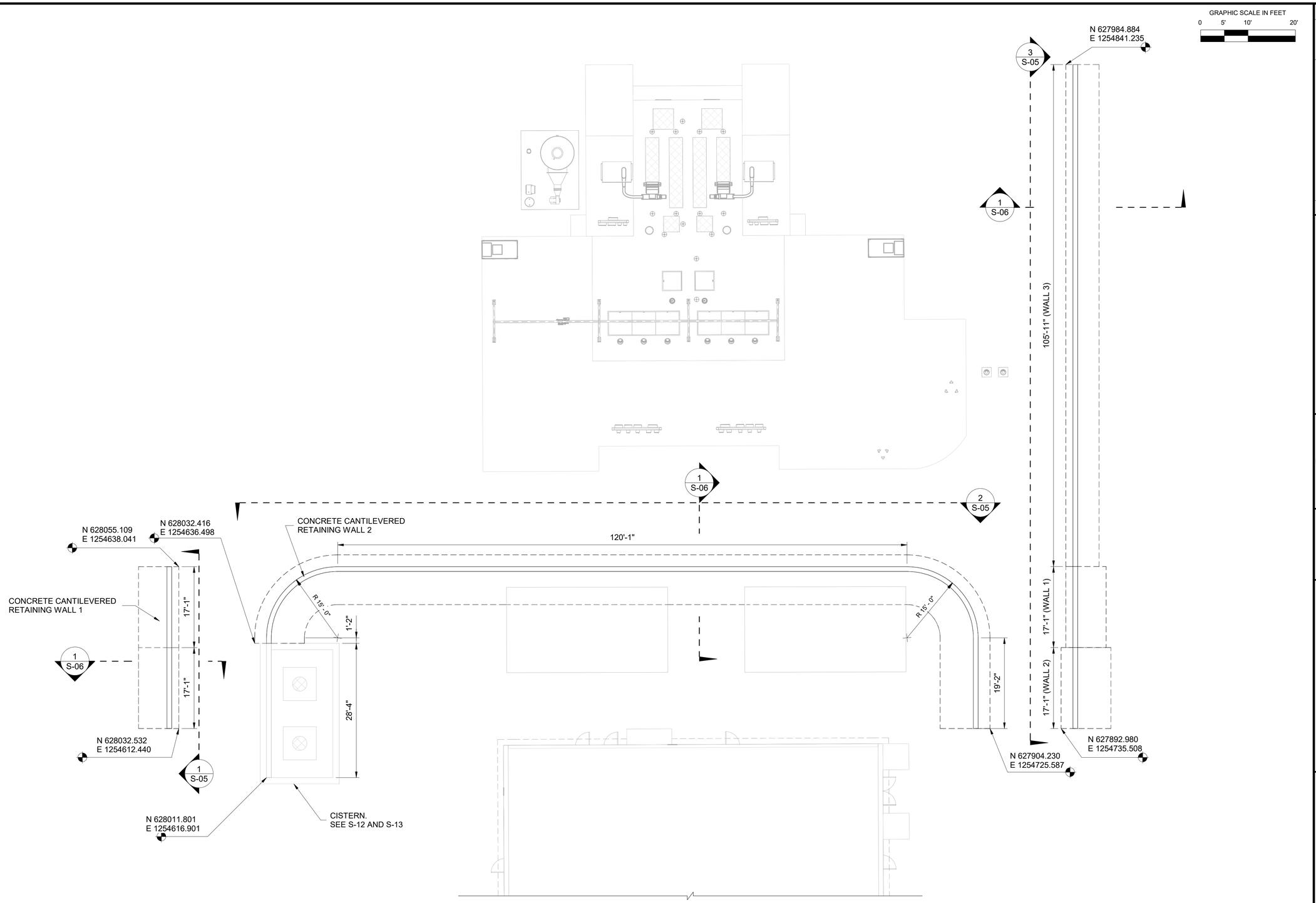

NOTES:

1. SEE TYPICAL CONCRETE RETAINING WALL SECTION 1/S-06 FOR RETAINING WALL REINFORCEMENT AND DETAILS.

1 / S-04 RETAINING WALL PLAN
1" = 10'-0"

NORTH

CONSTRUCTION DOCUMENTS

No.	REVISIONS	DATE	BY

Kimley»Horn

PROFESSIONAL ENGINEER
JON CASEY LONG
0-10005-1B
U.S. VIRGIN ISLANDS
07-13-26

KHA PROJECT	045826000
DATE	JUNE, 2026
SCALE: AS SHOWN	
DESIGNED BY:	SES
DRAWN BY:	NJB
CHECKED BY:	SES

RETAINING WALL PLAN

LBJ SEWERSHED REHABILITATION
PREPARED FOR
VIWMA

SHEET NUMBER
S-04

Autodesk Docs://045826000 St Croix LBJ Pump Station/LBJ_Sewershed -Structural Sec.rvt
This document, together with the concepts and designs presented herein, as an instrument of service, is intended only for the specific purpose and client for which it was prepared. Reuse of and improper reliance on this document without written authorization and adaptation by Kimley-Horn and Associates, Inc. shall be without liability to Kimley-Horn and Associates, Inc.

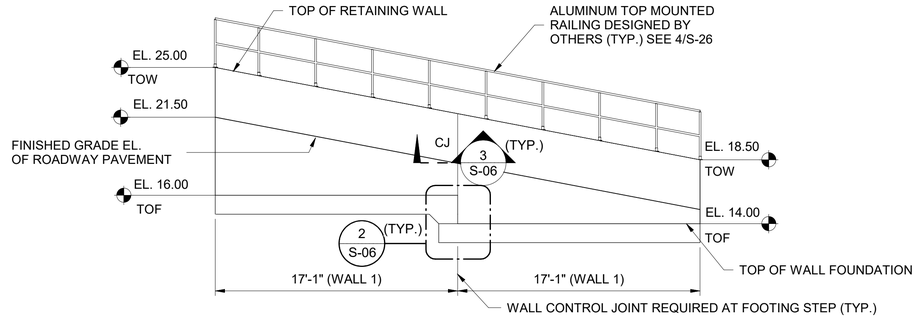

GRAPHIC SCALE IN INCHES
0 1/2" 1" 2"
0 5' - 4" 10' - 8"

NOTES:

1. VERIFY WALL ELEVATIONS WITH PAVING, GRADING AND DRAINAGE PLAN PRIOR TO CONSTRUCTION.
2. SEE TYPICAL CONCRETE RETAINING WALL SECTION 1/S-06 FOR RETAINING WALL REINFORCEMENT AND DETAILS.

1 / S-05 CONCRETE CANTILEVERED RETAINING WALL ELEVATION
3/16" = 1'-0"

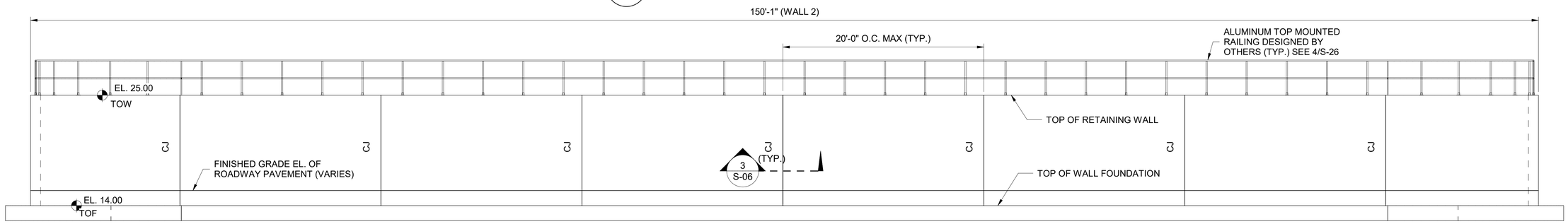

NOTES:

1. VERIFY WALL ELEVATIONS WITH PAVING, GRADING AND DRAINAGE PLAN PRIOR TO CONSTRUCTION.
2. SEE TYPICAL CONCRETE RETAINING WALL SECTION 1/S-06 FOR RETAINING WALL REINFORCEMENT AND DETAILS.
3. PROVIDE WALL CONTROL JOINTS AT 20' ON-CENTER MAXIMUM AND AS SHOWN IN THE ELEVATION.

2 / S-05 CONCRETE CANTILEVERED RETAINING WALL ELEVATION
3/16" = 1'-0"

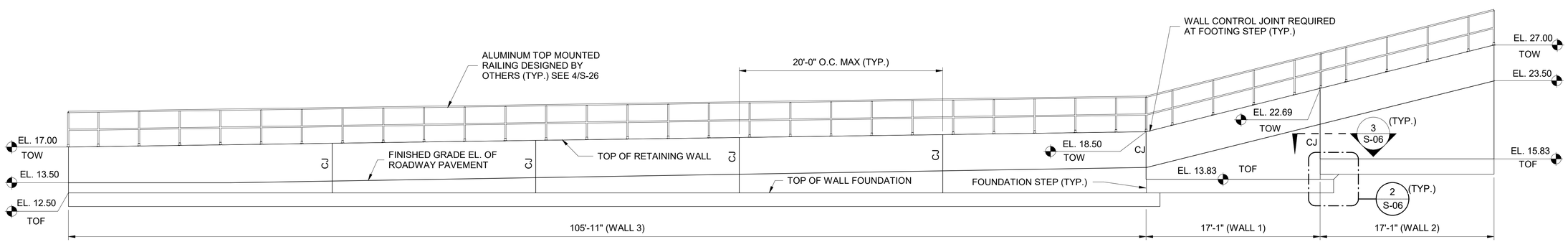

NOTES:

1. VERIFY WALL ELEVATIONS WITH PAVING, GRADING AND DRAINAGE PLAN PRIOR TO CONSTRUCTION.
2. SEE TYPICAL CONCRETE RETAINING WALL SECTION 1/S-06 FOR RETAINING WALL REINFORCEMENT AND DETAILS.
3. PROVIDE WALL CONTROL JOINTS AT 20' ON-CENTER MAXIMUM AND AS SHOWN IN THE ELEVATION.

3 / S-05 CONCRETE CANTILEVERED RETAINING WALL ELEVATION
3/16" = 1'-0"

CONSTRUCTION DOCUMENTS

No.	REVISIONS	DATE	BY

Kimley»Horn

PROFESSIONAL ENGINEER
JON CASEY LONG
0-10005-1B
VIRGIN ISLANDS
07-13-26

KHA PROJECT 045826000
DATE JUNE, 2026
SCALE: AS SHOWN
DESIGNED BY: SES
DRAWN BY: NJQ
CHECKED BY: SES

RETAINING WALL ELEVATIONS

LBJ SEWERSHED REHABILITATION
PREPARED FOR
VIWMA

SHEET NUMBER
S-05

Autodesk Docs://045826000 St Croix LBJ Pump Stations LBJ Sewershed - Structural Sel.rvt
This document, together with the concepts and designs presented herein, as an instrument of service, is intended only for the specific purpose and client for which it was prepared. Reuse of and improper reliance on this document without written authorization and adaptation by Kimley-Horn and Associates, Inc. shall be without liability to Kimley-Horn and Associates, Inc.

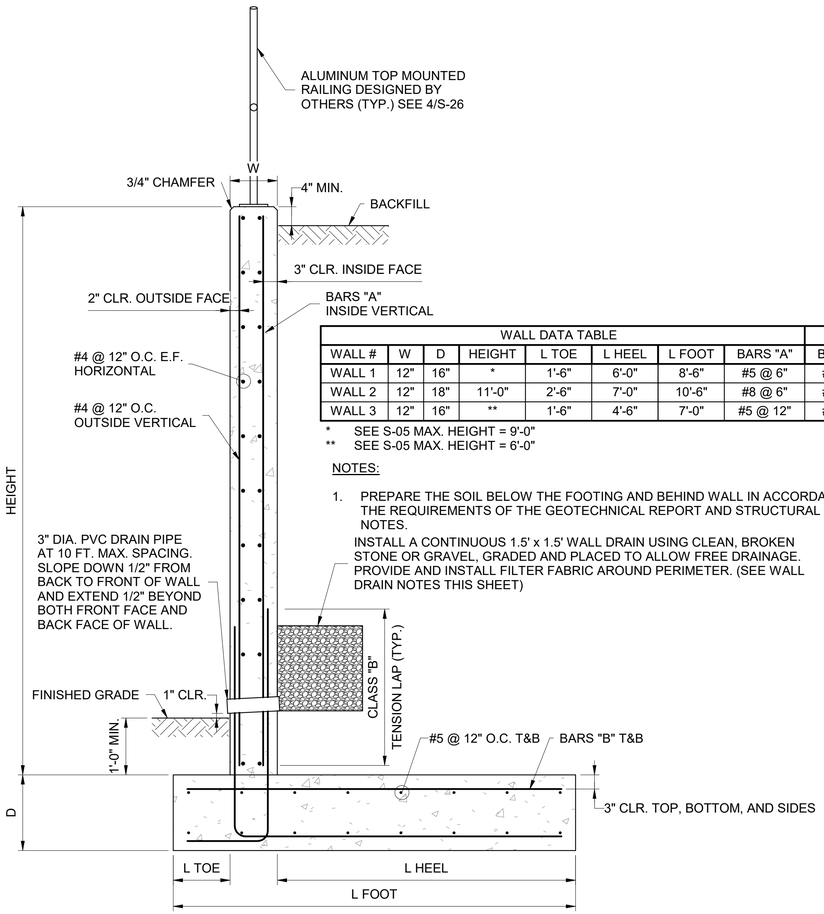

WALL DATA TABLE								
WALL #	W	D	HEIGHT	L TOE	L HEEL	L FOOT	BARS "A"	BARS "B"
WALL 1	12"	16"	*	1'-6"	6'-0"	8'-6"	#5 @ 6"	#6 @ 6"
WALL 2	12"	18"	11'-0"	2'-6"	7'-0"	10'-6"	#8 @ 6"	#7 @ 6"
WALL 3	12"	16"	**	1'-6"	4'-6"	7'-0"	#5 @ 12"	#6 @ 6"

* SEE S-05 MAX. HEIGHT = 9'-0"
** SEE S-05 MAX. HEIGHT = 6'-0"

NOTES:

1. PREPARE THE SOIL BELOW THE FOOTING AND BEHIND WALL IN ACCORDANCE WITH THE REQUIREMENTS OF THE GEOTECHNICAL REPORT AND STRUCTURAL GENERAL NOTES.

1 / S-06 TYPICAL CONCRETE RETAINING WALL SECTION
SCALE: NONE

WALL DRAIN NOTES:

1. DRAINAGE AGGREGATE SHALL BE CLEAN, CRUSHED STONE OR GRANULAR FILL MATERIAL MEETING THE FOLLOWING GRADATION:

SIEVE SIZE	PERCENT PASSING
1 INCH	100
3/4 INCH	75 TO 100
NO. 4	0 TO 60
NO. 40	0 TO 50
NO. 200	0 TO 5

2. DRAINAGE PIPE SHALL BE A PERFORATED OR SLOTTED, PVC OR CORRUGATED HDPE PIPE WRAPPED IN FILTER FABRIC.
3. FILTER FABRIC SHALL BE MIRAFI 140N OR EQUAL.

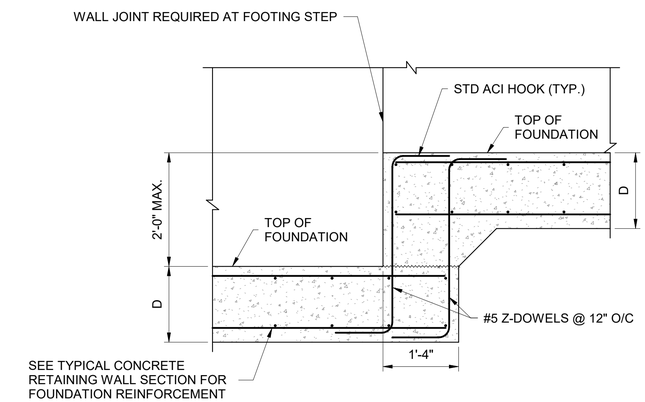

2 / S-06 RETAINING WALL STEP DETAIL
SCALE: NONE

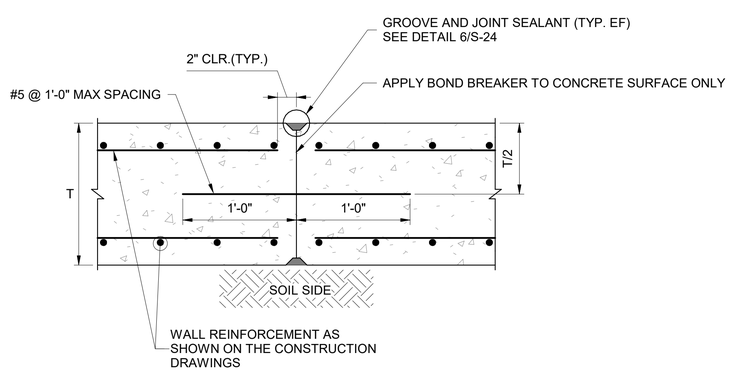

NOTES:
1. CONTRACTOR SUBMIT LOCATION FOR APPROVAL IF NOT SPECIFIED.
2. ALLOW 48 HOURS BETWEEN PLACEMENT OF INITIAL CAST AND SUBSEQUENT CASTS.

3 / S-06 RETAINING WALL CONTROL JOINT DETAIL
SCALE: NONE

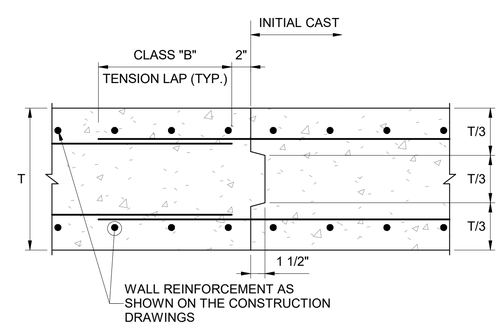

NOTES:
1. CONTRACTOR SUBMIT LOCATION FOR APPROVAL IF NOT SPECIFIED.
2. ALLOW 48 HOURS BETWEEN PLACEMENT OF INITIAL CAST AND SUBSEQUENT CASTS.

4 / S-06 RETAINING WALL CONSTRUCTION JOINT DETAIL
SCALE: NONE

CONSTRUCTION DOCUMENTS

No.	REVISIONS	DATE	BY

Kimley»Horn
Sign of Quality

PROFESSIONAL ENGINEER
JON CASEY LONG
O-10005-1B
U.S. VIRGIN ISLANDS
07-13-26

KHA PROJECT 045826000
DATE JUNE, 2026
SCALE: AS SHOWN
DESIGNED BY: SES
DRAWN BY: NJD
CHECKED BY: SES

RETAINING WALL DETAILS

LBJ SEWERSHED REHABILITATION
PREPARED FOR
VIWMA

SHEET NUMBER
S-06

This document, together with the concepts and designs presented herein, as an instrument of service, is intended only for the specific purpose and client for which it was prepared. Reuse of and improper reliance on this document without written authorization and adaptation by Kimley-Horn and Associates, Inc. shall be without liability to Kimley-Horn and Associates, Inc.

Autodesk Docs://045826000 St Croix LBJ Pump Station/LBJ Sewershed_Structural Set.rvt

GRAPHIC SCALE IN INCHES

0 1/2" 1" 2"

0 5' - 4" 10' - 8"

NOTES:

1. FOUNDATION BELOW NOT SHOWN FOR CLARITY.
2. SEE DETAILS SHEET S-23 FOR SLAB AND WALL OPENING REINFORCEMENT.
3. DIMENSION SHOWN FOR COVER PLATES AND ACCESS HATCHES REPRESENT THE OPENINGS IN THE SLAB AND NOT THE ACTUAL COVER PLATE OR ACCESS HATCH SIZES

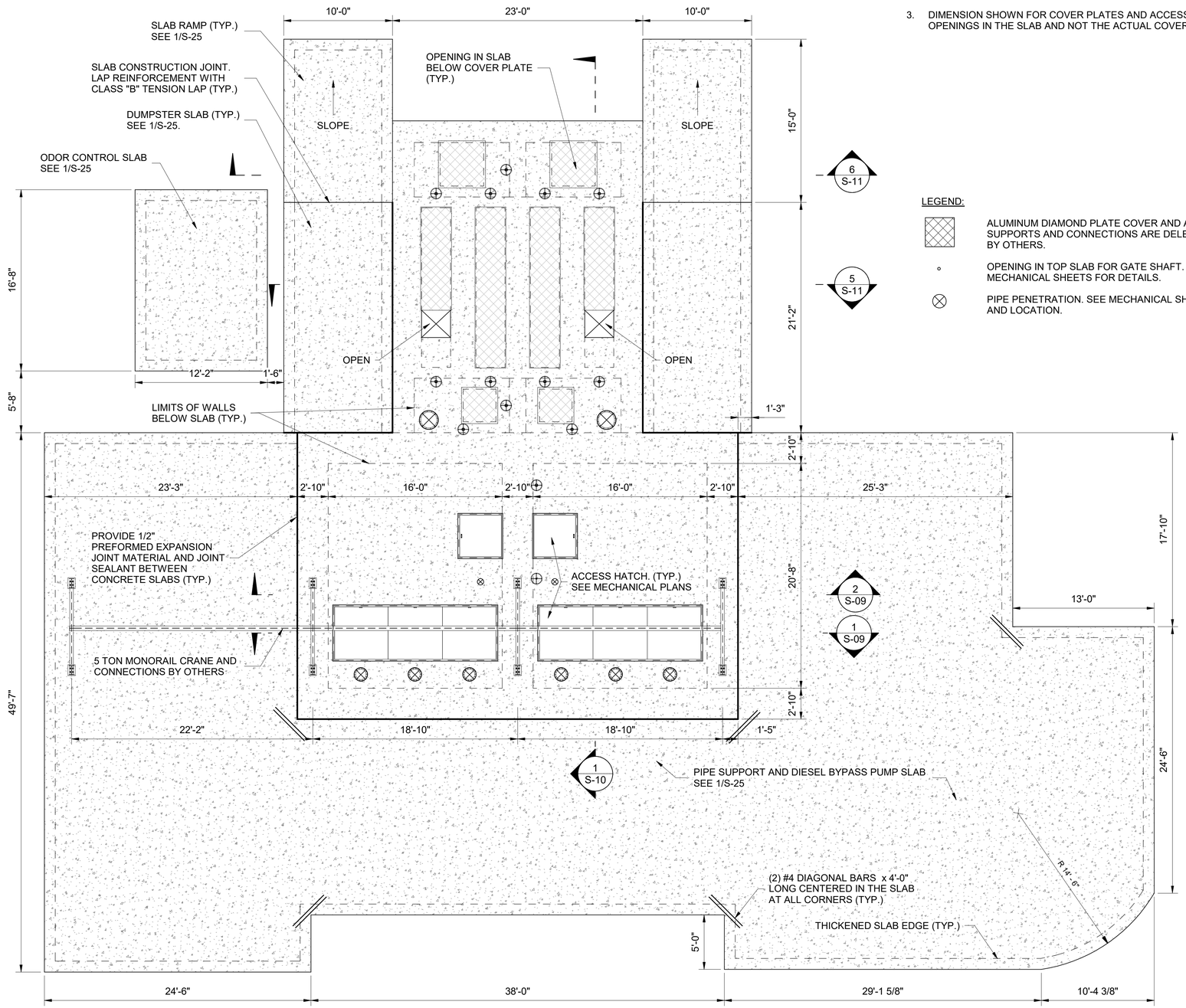

LEGEND:

ALUMINUM DIAMOND PLATE COVER AND ASSOCIATED SUPPORTS AND CONNECTIONS ARE DELEGATED DESIGN BY OTHERS.

OPENING IN TOP SLAB FOR GATE SHAFT. SEE MECHANICAL SHEETS FOR DETAILS.

PIPE PENETRATION. SEE MECHANICAL SHEETS FOR SIZE AND LOCATION.

1 / S-07 WET WELL OVERVIEW PLAN
3/16" = 1'-0"

NORTH

CONSTRUCTION DOCUMENTS

No.	REVISIONS	DATE	BY

Kimley»Horn

Sign of Quality

PROFESSIONAL ENGINEER
JON CASEY LONG
0-10005-1B
U.S. VIRGIN ISLANDS
07-13-26

K/H PROJECT 045826000
DATE JUNE 2026
SCALE: AS SHOWN
DESIGNED BY: SES
DRAWN BY: NJD
CHECKED BY: SES

WET WELL AND INFLUENT CHANNELS OVERVIEW PLAN

LBJ SEWERSHED REHABILITATION
PREPARED FOR
VIWMA

SHEET NUMBER
S-07

Autodesk Docs://045826000 St Croix LBJ Pump Station/LBJ Triplex (Submersible at Grade) R2024.rvt
This document, together with the concepts and designs presented herein, as an instrument of service, is intended only for the specific purpose and client for which it was prepared. Reuse of and improper reliance on this document without written authorization and adaptation by Kimley-Horn and Associates, Inc. shall be without liability to Kimley-Horn and Associates, Inc.

NOTES:

1. SEE DETAIL SHEET S-23 FOR SLAB OPENING REINFORCEMENT.
2. SLAB REINFORCEMENT SHOW IS IN ADDITION TO MAIN SLAB REINFORCEMENT. MAIN SLAB REINFORCEMENT IS NOT SHOWN FOR CLARITY. SEE SECTION 3/S-10 FOR TYPICAL SLAB REINFORCEMENT.
3. FLOOR GROUT NOT SHOWN FOR CLARITY. SEE SECTIONS FOR DETAILS.
4. ALL INTERIOR SURFACES OF PUMP STATION SHALL BE COATED WITH 1" SEWPERCOAT OR APPROVED EQUAL.

GRAPHIC SCALE IN INCHES
0 1/2" 1" 2"
0 4' 8'

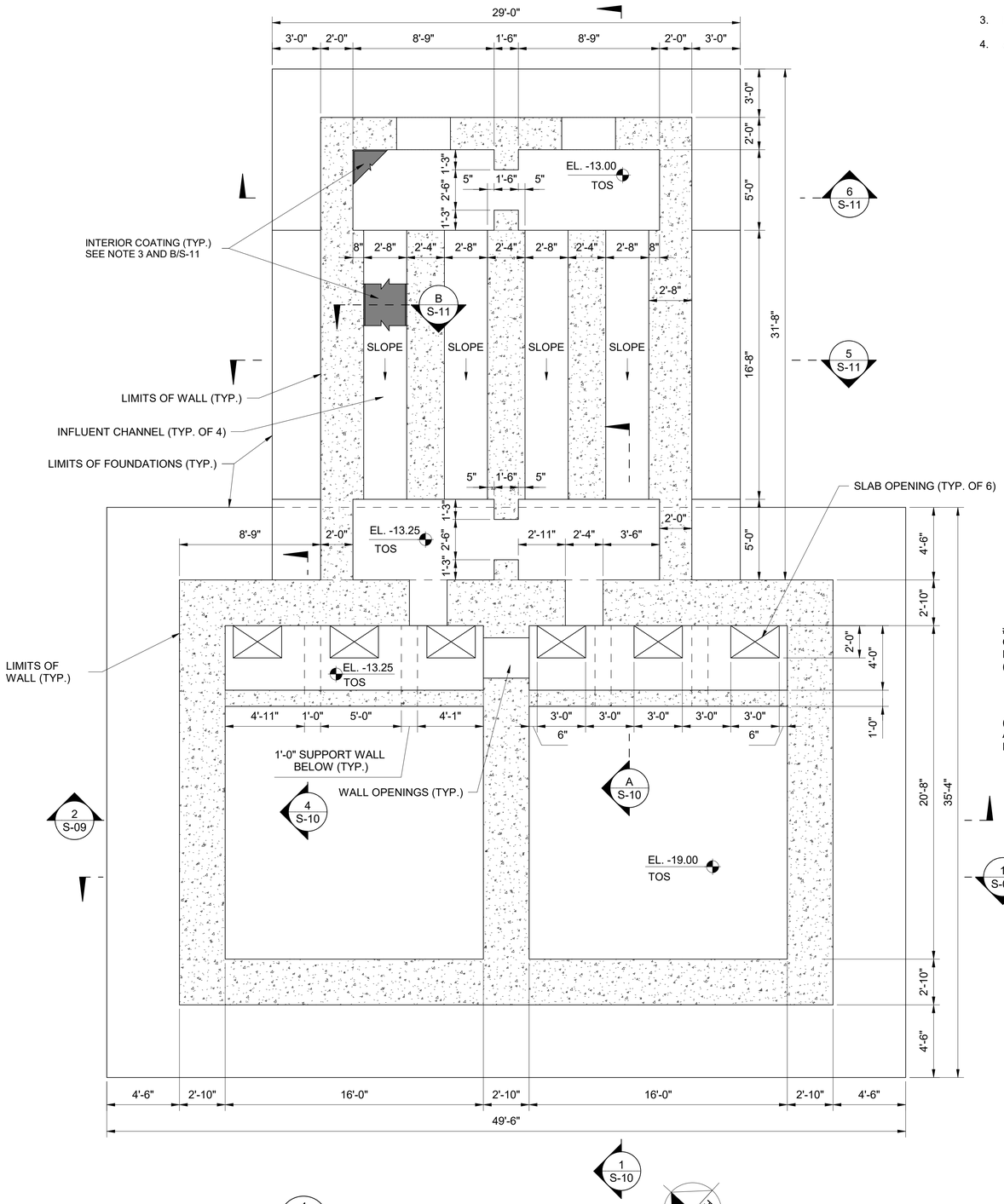

1 S-08 PUMP STATION FOUNDATION AND WALL PLAN (EL. -12.00)
1/4" = 1'-0"

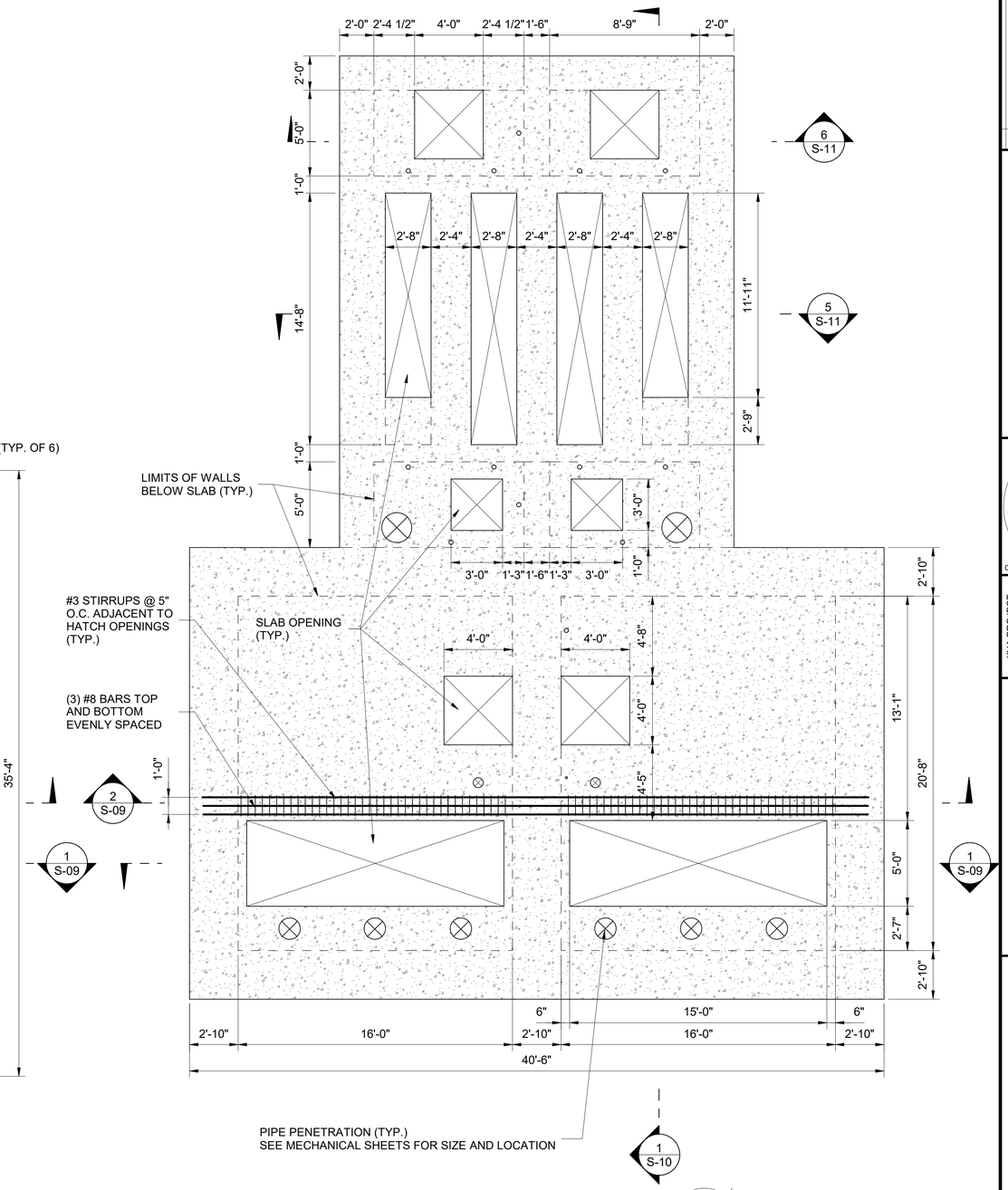

2 S-08 PUMP STATION TOP PLAN
1/4" = 1'-0"

CONSTRUCTION DOCUMENTS

No.	REVISIONS	DATE	BY

Kimley»Horn

PROFESSIONAL ENGINEER
JON CASEY LONG
0-10005-1B
U.S. VIRGIN ISLANDS
07-13-26

KHA PROJECT 045826000
DATE JUNE 2026
SCALE: AS SHOWN
DESIGNED BY: SES
DRAWN BY: NJD
CHECKED BY: SES

WET WELL AND INFLUENT CHANNELS FOUNDATION, WALL, AND TOP PLAN

LBJ SEWERSHED REHABILITATION
PREPARED FOR
VIWMA

SHEET NUMBER
S-08

Autodesk Docs://045826000 St Croix LBJ Pump Station/LBJ Triplex (Submersible at Grade) R2026.rvt
This document, together with the concepts and designs presented herein, as an instrument of service, is intended only for the specific purpose and client for which it was prepared. Reuse of and improper reliance on this document without written authorization and adaptation by Kimley-Horn and Associates, Inc. shall be without liability to Kimley-Horn and Associates, Inc.

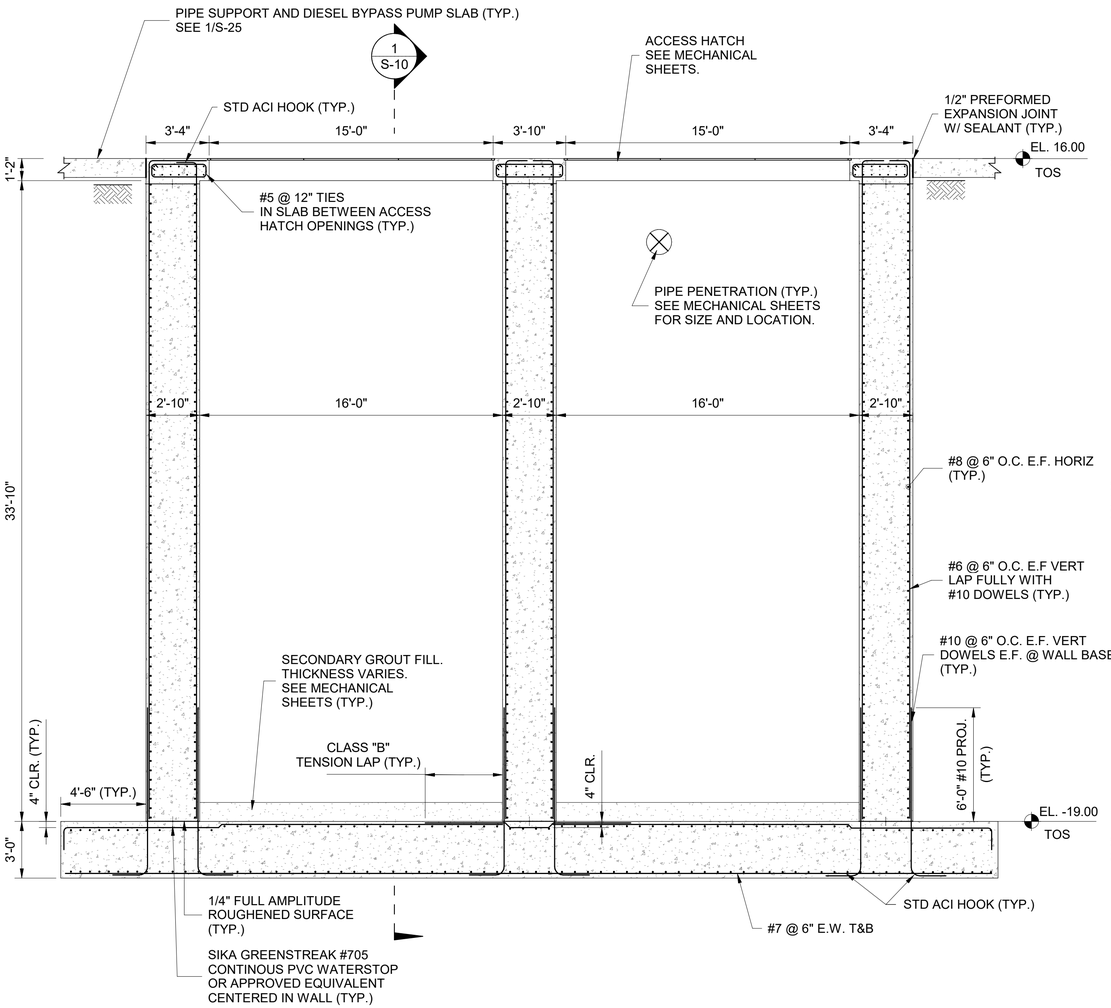

1 S-09 WET WELL SECTION 1
1/4" = 1'-0"

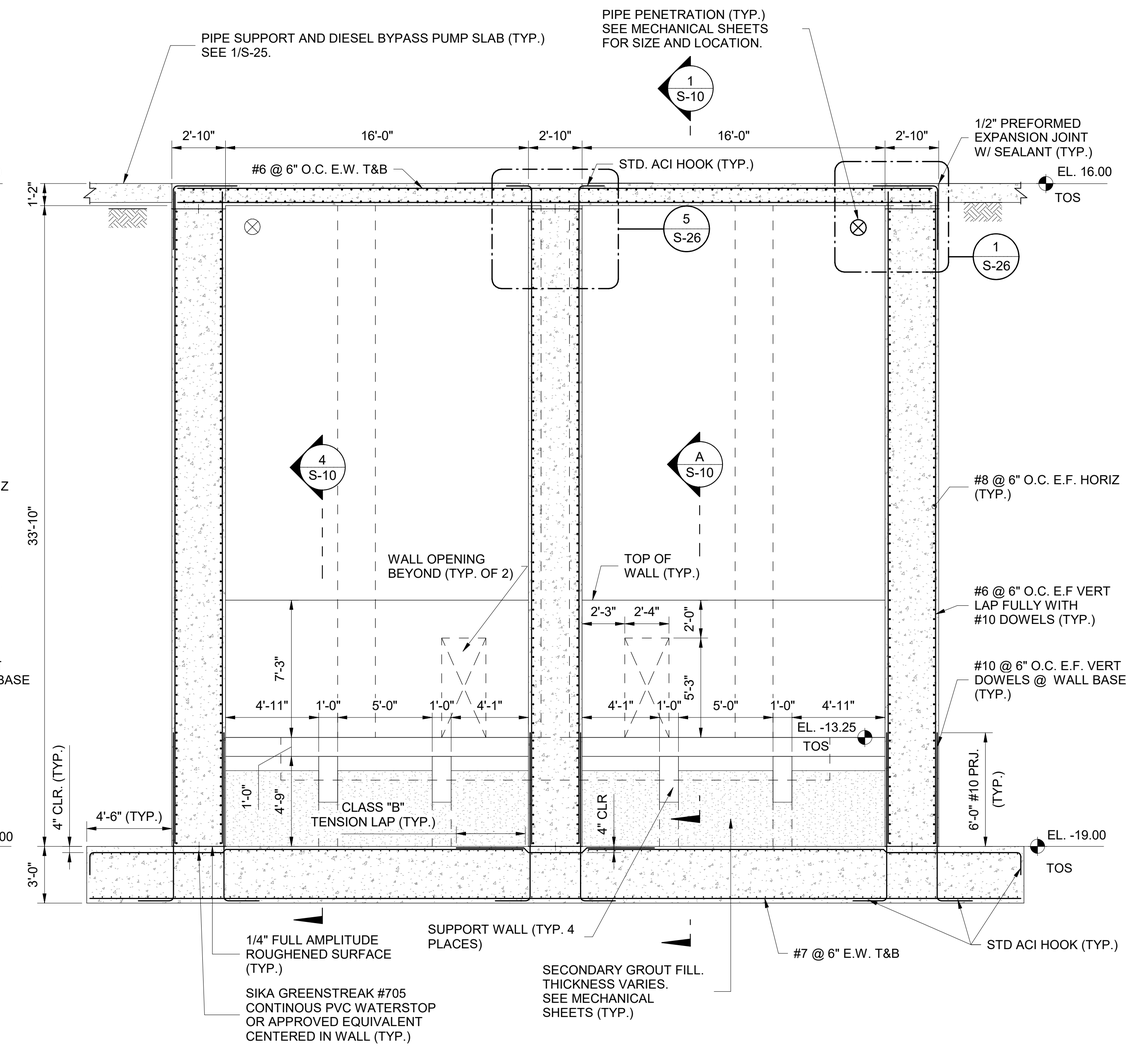

2 S-09 WET WELL SECTION 2
1/4" = 1'-0"

NOTES:

1. SEE DETAILS SHEET S-23 FOR SLAB AND WALL OPENING REINFORCEMENT.
2. SOIL PREPARATION BELOW FOUNDATION, SLABS AND AROUND ALL WALLS, INCLUDING COMPACTION SHALL BE PERFORMED IN ACCORDANCE WITH THE RECOMMENDATIONS IN THE GEOTECHNICAL REPORT REFERENCED IN THE FOUNDATIONS AND SLABS NOTES ON SHEET S-01.
3. ALL INTERIOR SURFACES OF THE PUMP STATION SHALL BE COATED WITH 1" SEWPERCOAT OR APPROVED EQUAL.

CONSTRUCTION DOCUMENTS

No.	REVISIONS	DATE	BY

Kimley»Horn
Sign of Quality

PROFESSIONAL ENGINEER
JON CASEY LONG
0-10005-1B
U.S. VIRGIN ISLANDS
07-13-26

KHA PROJECT	045826000
DATE	JUNE 2026
SCALE: AS SHOWN	
DESIGNED BY:	SES
DRAWN BY:	NJC
CHECKED BY:	SES

WET WELL AND INFLUENT CHANNEL SECTIONS

LBJ SEWERSHED REHABILITATION
PREPARED FOR
VIWMA

SHEET NUMBER
S-09

Autodesk Docs://045826000 St Croix LBJ Pump Station/LBJ Triplex (Submersible at Grade) R2024.rvt
This document, together with the concepts and designs presented herein, as an instrument of service, is intended only for the specific purpose and client for which it was prepared. Reuse of and improper reliance on this document without written authorization and adaptation by Kimley-Horn and Associates, Inc. shall be without liability to Kimley-Horn and Associates, Inc.

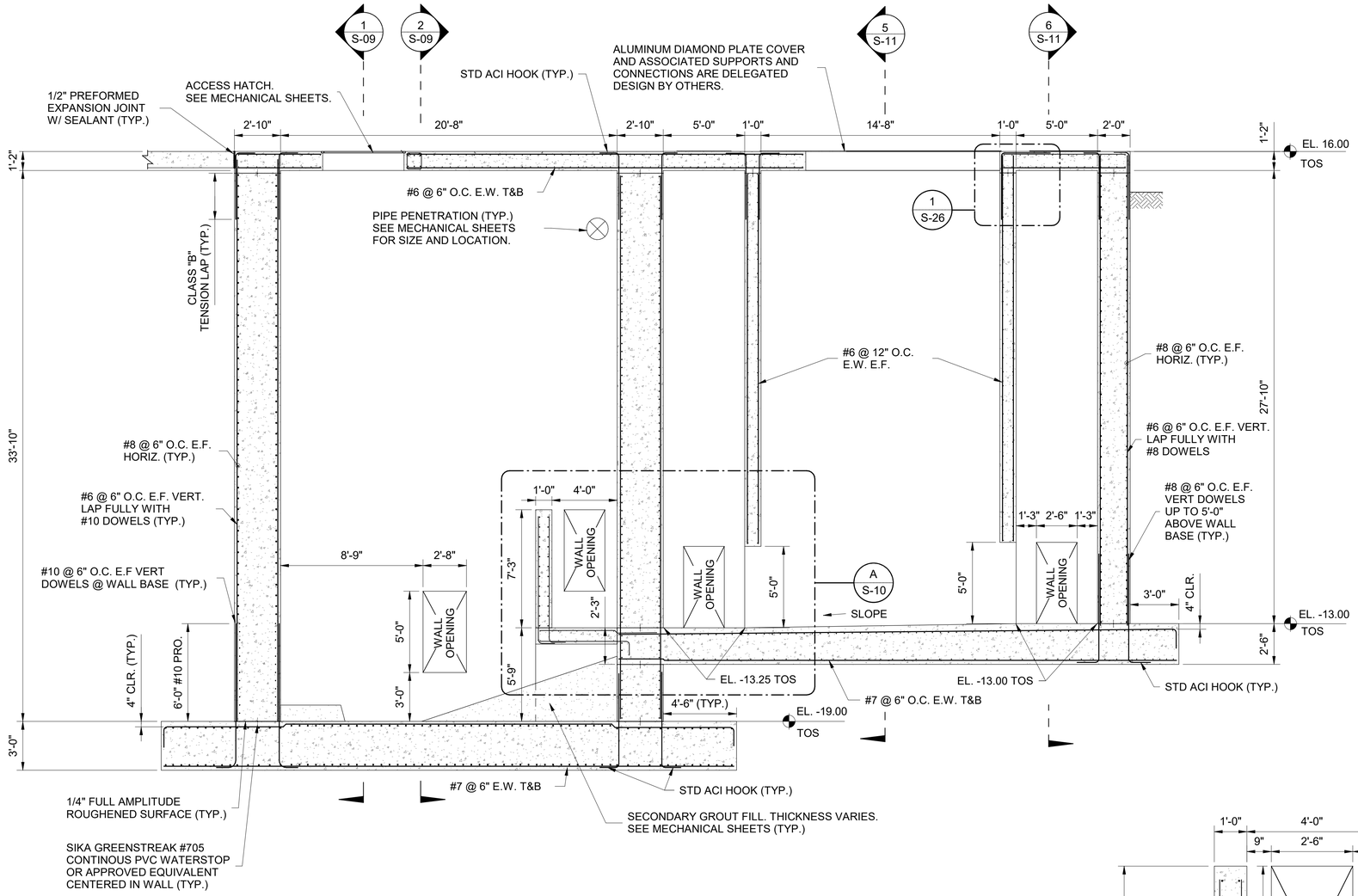

1 S-10 WET WELL SECTION 3
1/4" = 1'-0"

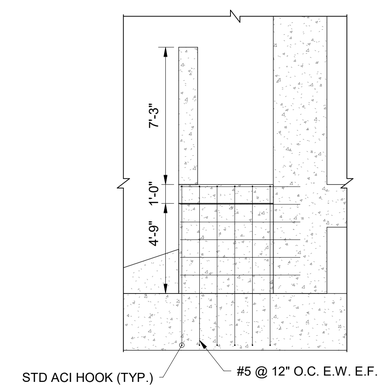

4 S-10 SUPPORT WALL SECTION
1/4" = 1'-0"

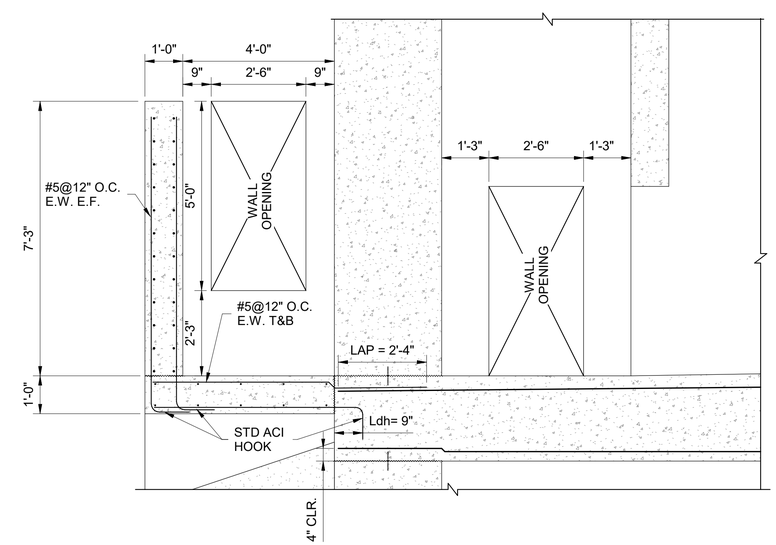

A S-10 WETWELL DETAIL A
1/2" = 1'-0"

NOTES:

1. SEE DETAILS SHEET S-23 FOR SLAB AND WALL OPENING REINFORCEMENT.
2. SOIL PREPARATION BELOW FOUNDATION, SLABS AND AROUND ALL WALLS, INCLUDING COMPACTION SHALL BE PERFORMED IN ACCORDANCE WITH THE RECOMMENDATIONS IN THE GEOTECHNICAL REPORT REFERENCED IN THE FOUNDATIONS AND SLABS NOTES ON SHEET S-01.
3. ALL INTERIOR SURFACES OF THE PUMP STATION SHALL BE COATED WITH 1" SEWPERCOAT OR APPROVED EQUAL.

CONSTRUCTION DOCUMENTS

No.	REVISIONS	DATE	BY

Kimley»Horn

PROFESSIONAL ENGINEER
JON CASEY LONG
0-10005-1B
VIRGINIA
07-13-26

KHA PROJECT 045826000
DATE JUNE 2026
SCALE: AS SHOWN
DESIGNED BY: SES
DRAWN BY: NJD
CHECKED BY: SES

WET WELL AND INFLUENT CHANNEL SECTIONS

LBJ SEWERSHED REHABILITATION
PREPARED FOR
VIWMA

SHEET NUMBER
S-10

Autodesk Docs://045826000 SI Docs LBJ Pump Station LBJ Triplex (Submersible at Grade) R2024.rvt
This document, together with the concepts and designs presented herein, as an instrument of service, is intended only for the specific purpose and client for which it was prepared. Reuse of and improper reliance on this document without written authorization and adaptation by Kimley-Horn and Associates, Inc. shall be without liability to Kimley-Horn and Associates, Inc.

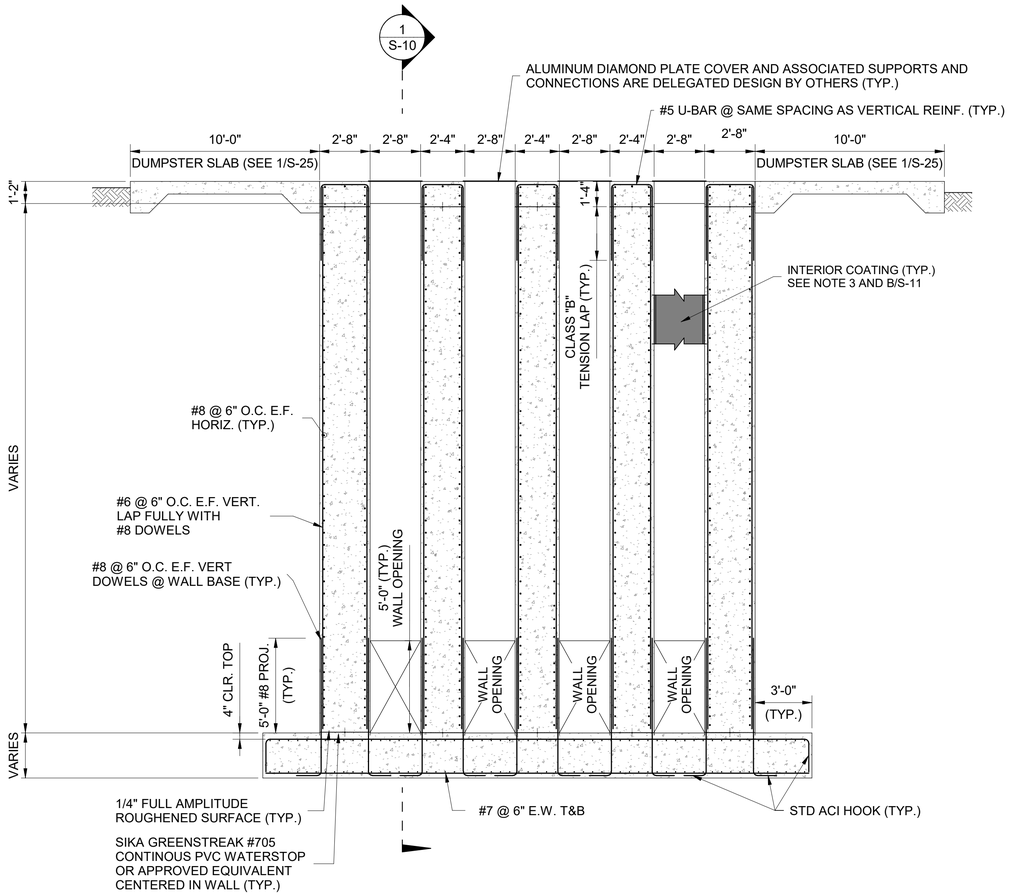

5 / S-11 INFLUENT CHANNEL SECTION
1/4" = 1'-0"

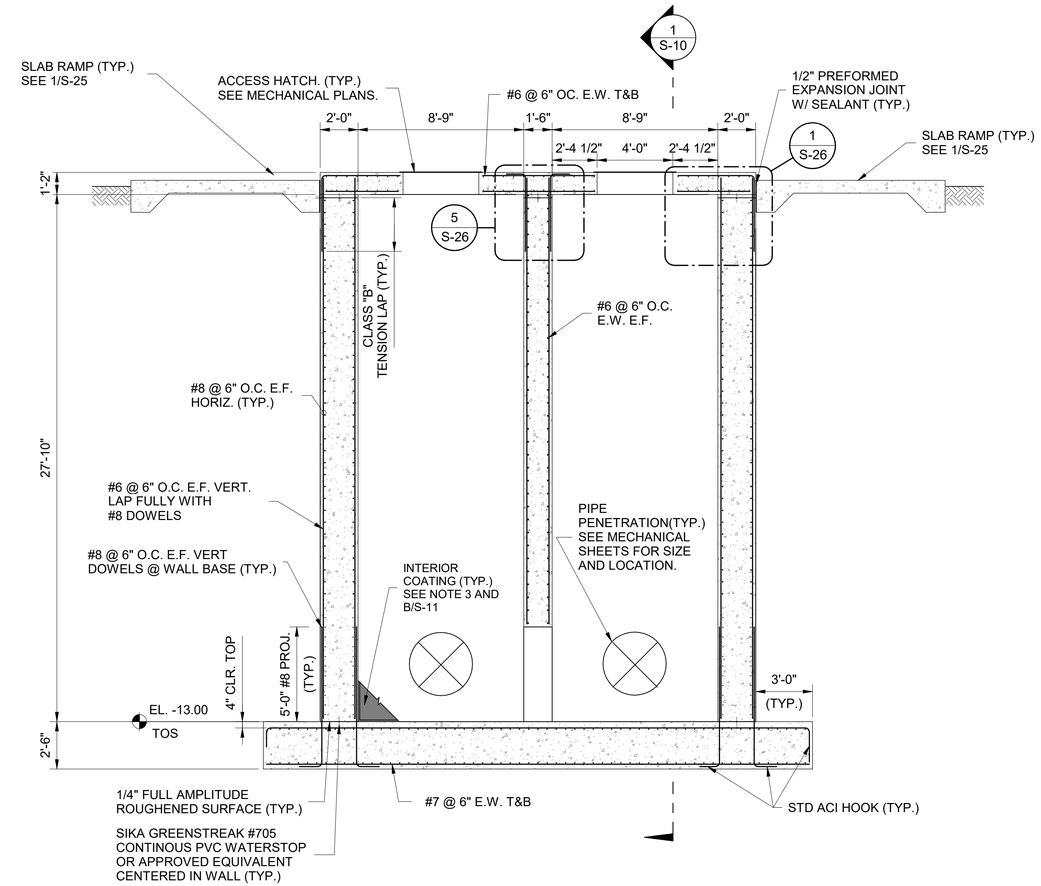

6 / S-11 INFLUENT CHANNEL SECTION
1/4" = 1'-0"

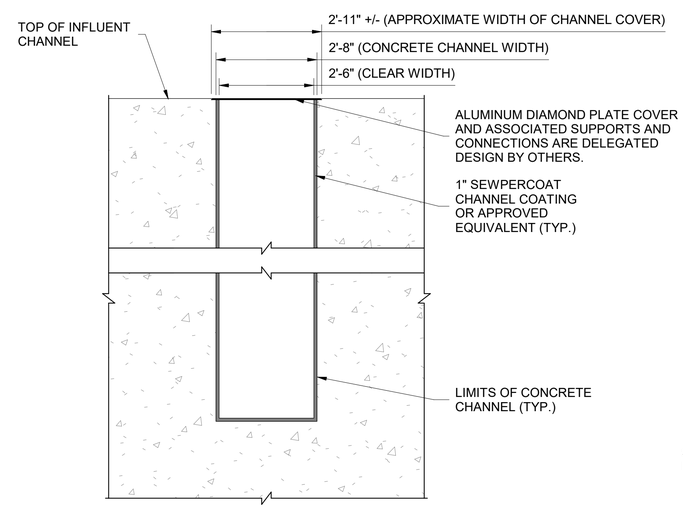

SIDE VIEW OF CHANNEL

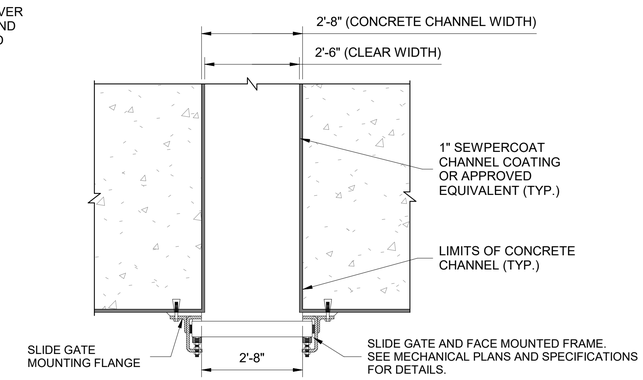

NOTE: COVER PLATE NOT SHOWN FOR CLARITY.

TOP VIEW

B / S-11 COATING DETAIL
1/2" = 1'-0"

NOTES:

1. SEE DETAILS SHEET S-23 FOR SLAB AND WALL OPENING REINFORCEMENT.
2. SOIL PREPARATION BELOW FOUNDATION, SLABS AND AROUND ALL WALLS, INCLUDING COMPACTION SHALL BE PERFORMED IN ACCORDANCE WITH THE RECOMMENDATIONS IN THE GEOTECHNICAL REPORT REFERENCED IN THE FOUNDATIONS AND SLABS NOTES ON SHEET S-01.
3. ALL INTERIOR SURFACES OF THE PUMP STATION SHALL BE COATED WITH 1" SEWPERCOAT OR APPROVED EQUAL.

CONSTRUCTION DOCUMENTS

No.	REVISIONS	DATE	BY

Kimley»Horn

PROFESSIONAL ENGINEER
JON CASEY LONG
0-10005-1B
U.S. VIRGIN ISLANDS
07-13-26

KHA PROJECT 045826000
DATE JUNE 2026
SCALE: AS SHOWN
DESIGNED BY: SES
DRAWN BY: NJD
CHECKED BY: SES

WET WELL AND INFLUENT CHANNEL SECTIONS

LBJ SEWERSHED REHABILITATION
PREPARED FOR
VIWMA

SHEET NUMBER
S-11

Autodesk Docs://045826000 St Croix LBJ Pump Station LBJ Triplex (Submersible at Grade) R2026.rvt
This document, together with the concepts and designs presented herein, as an instrument of service, is intended only for the specific purpose and client for which it was prepared. Reuse of and improper reliance on this document without written authorization and adaptation by Kimley-Horn and Associates, Inc. shall be without liability to Kimley-Horn and Associates, Inc.

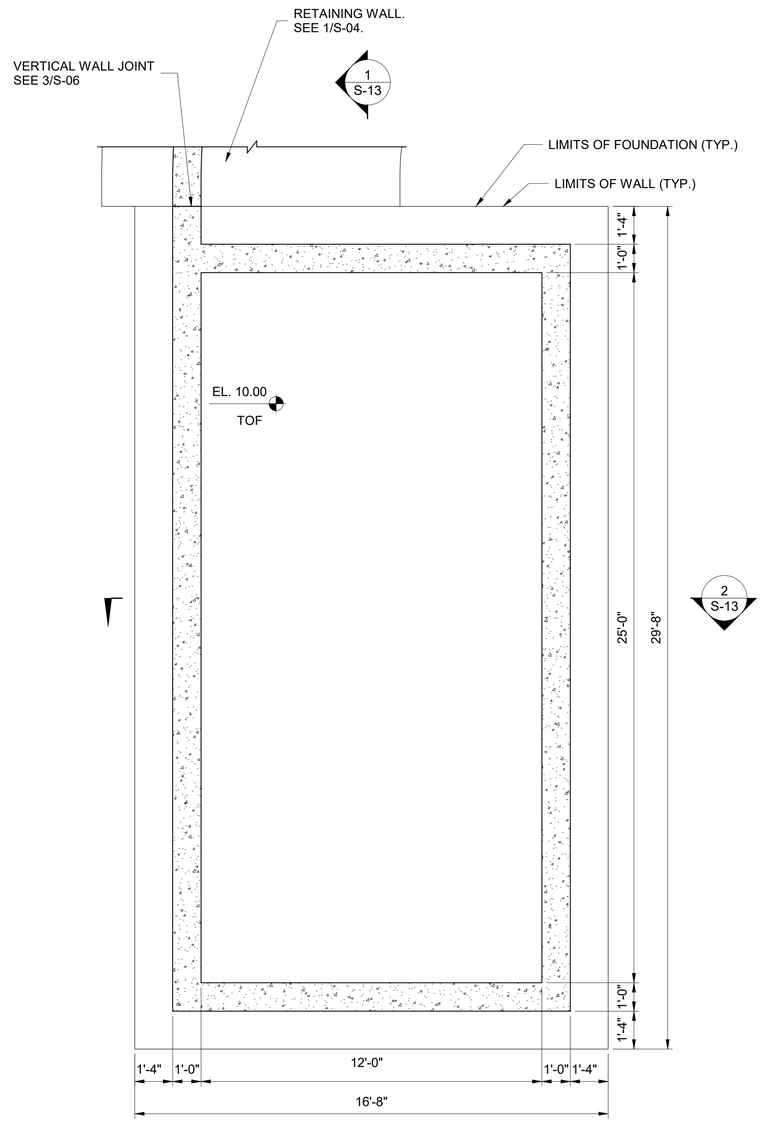

1 S-12 CISTERN WALL AND FOUNDATION PLAN
3/8" = 1'-0"

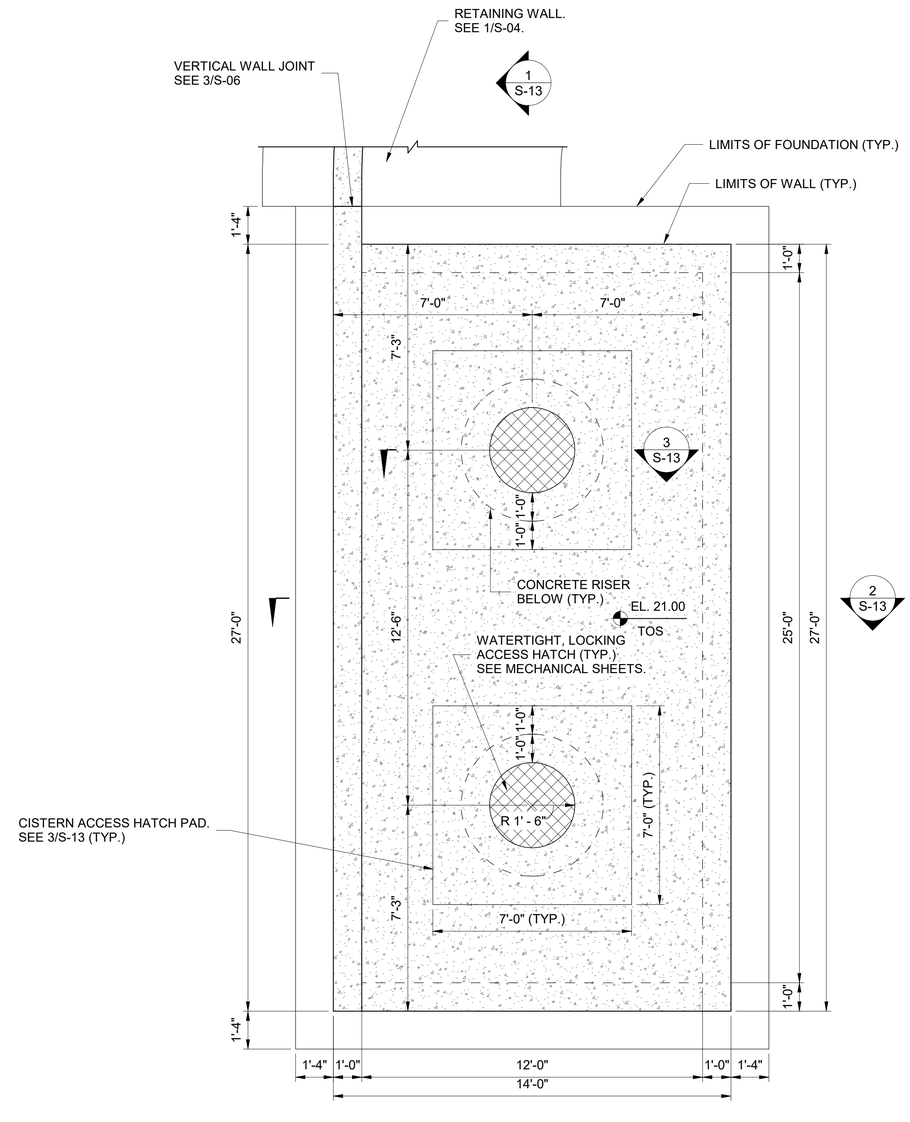

2 S-12 CISTERN TOP PLAN
3/8" = 1'-0"

NOTES:

1. PROVIDE ADDITIONAL REINFORCMENT AROUND SLAB OPENINGS IN ACCORDANCE WITH THE DETAILS ON SHEET S-23.

CONSTRUCTION DOCUMENTS

GRAPHIC SCALE IN INCHES
0 1/2" 1" 2"
0 2' - 8" 5' - 4"

No.	REVISIONS	DATE	BY

Kimley»Horn
EDT Sign of Quality

PROFESSIONAL ENGINEER
JON CASEY LONG
0-10005-1B
U.S. VIRGIN ISLANDS
07-13-26

KHA PROJECT 045826000	
DATE JUNE 2026	
SCALE: AS SHOWN	
DESIGNED BY:	SES
DRAWN BY:	NJD
CHECKED BY:	SES

CISTERN PLANS

LBJ SEWERSHED REHABILITATION
PREPARED FOR
VIWMA

SHEET NUMBER
S-12

Autodesk Docs://045826000 St Croix LBJ Pump Station/LBJ Masonry Pump Station Building R23024.rvt
This document, together with the concepts and designs presented herein, as an instrument of service, is intended only for the specific purpose and client for which it was prepared. Reuse of and improper reliance on this document without written authorization and adaptation by Kimley-Horn and Associates, Inc. shall be without liability to Kimley-Horn and Associates, Inc.

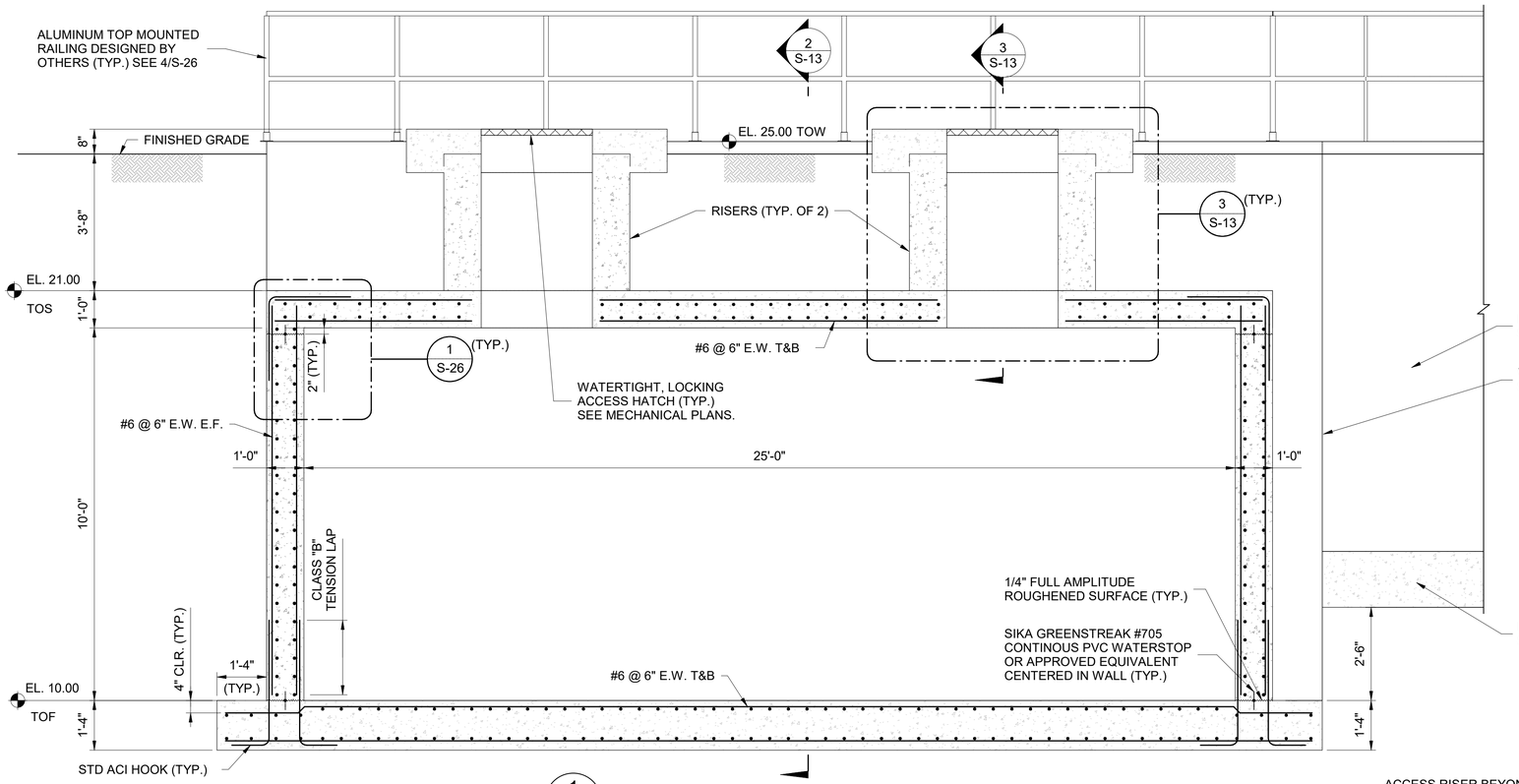

1 S-13 CISTERN SECTION 1
1/2" = 1'-0"

NOTES:

1. INTERIOR OF CISTERN SHALL BE COATED WITH SERIES 1220 HYDROLINE IN ACCORDANCE WITH SPECIFICATION 09 97 13.
2. SOIL PREPARATION BELOW FOUNDATION AND SLABS AND AROUND ALL WALLS, INCLUDING COMPACTION, SHALL BE PERFORMED IN ACCORDANCE WITH THE RECOMMENDATIONS IN THE GEOTECHNICAL REPORT REFERENCED IN THE FOUNDATIONS AND SLABS NOTES ON SHEET S-01.
3. BACKFILL SHALL BE IN ACCORDANCE WITH THE RECOMMENDATIONS IN THE GEOTECHNICAL REPORT REFERENCED IN THE FOUNDATIONS AND SLABS NOTES ON SHEET S-01.
4. PROVIDE ADDITIONAL REINFORCEMENT AROUND SLAB OPENINGS IN ACCORDANCE WITH THE DETAILS ON SHEET S-23.

RETAINING WALL. SEE 1/S-04.

VERTICAL WALL JOINT SEE 3/S-06

RETAINING WALL FOUNDATION. SEE 1/S-04.

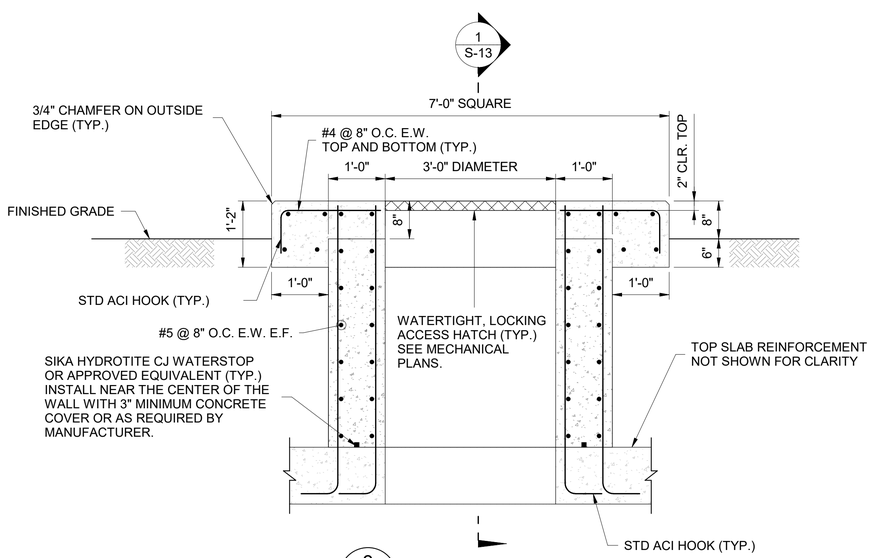

3 S-13 CISTERN RISER DETAIL
3/4" = 1'-0"

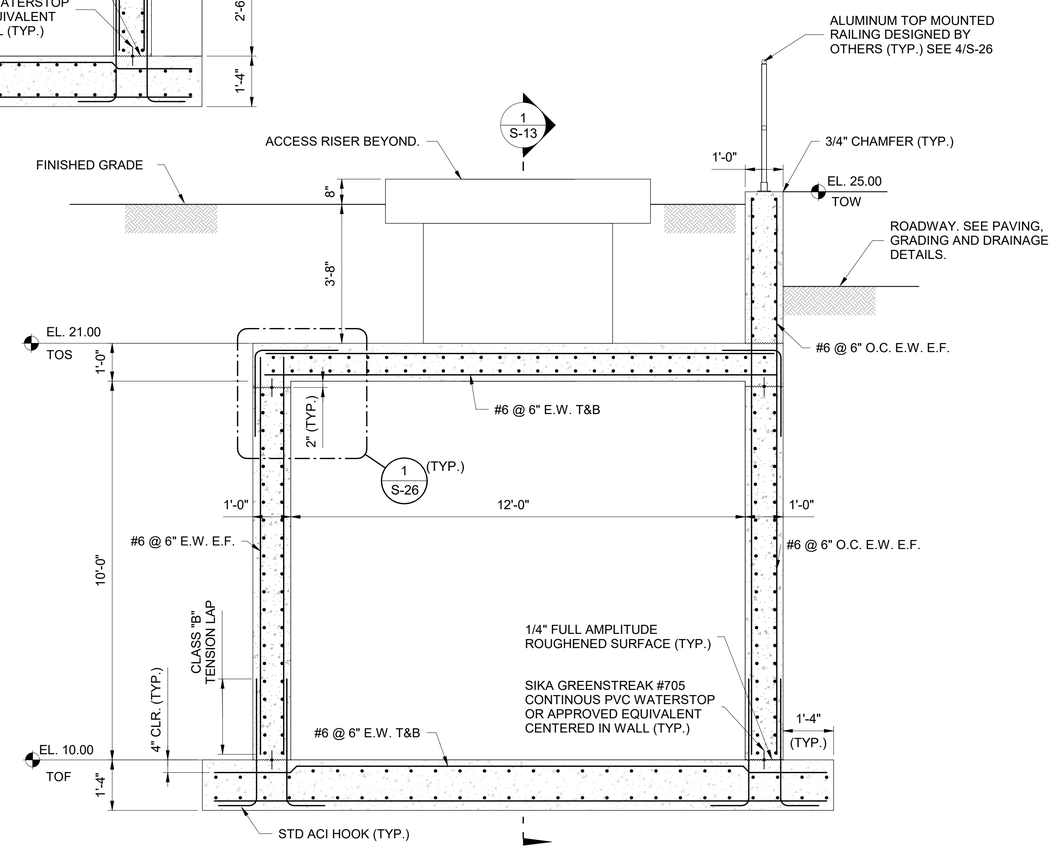

2 S-13 CISTERN SECTION 2
1/2" = 1'-0"

CONSTRUCTION DOCUMENTS

No.	REVISIONS	DATE	BY

Kimley»Horn

PROFESSIONAL ENGINEER
JON CASEY LONG
0-10005-1B
U.S. VIRGIN ISLANDS
07-13-26

KHA PROJECT 045826000
DATE JUNE 2026
SCALE: AS SHOWN
DESIGNED BY: SES
DRAWN BY: NJD
CHECKED BY: SES

CISTERN SECTIONS

LBJ SEWERSHED REHABILITATION
PREPARED FOR
VIWMA

SHEET NUMBER
S-13

This document, together with the concepts and designs presented herein, as an instrument of service, is intended only for the specific purpose and client for which it was prepared. Reuse of and improper reliance on this document without written authorization and adaptation by Kimley-Horn and Associates, Inc. shall be without liability to Kimley-Horn and Associates, Inc.

Autodesk Docs://045826000 SI Coos LBJ Pump Station/LBJ Masonry Pump Station Building R2024.rvt

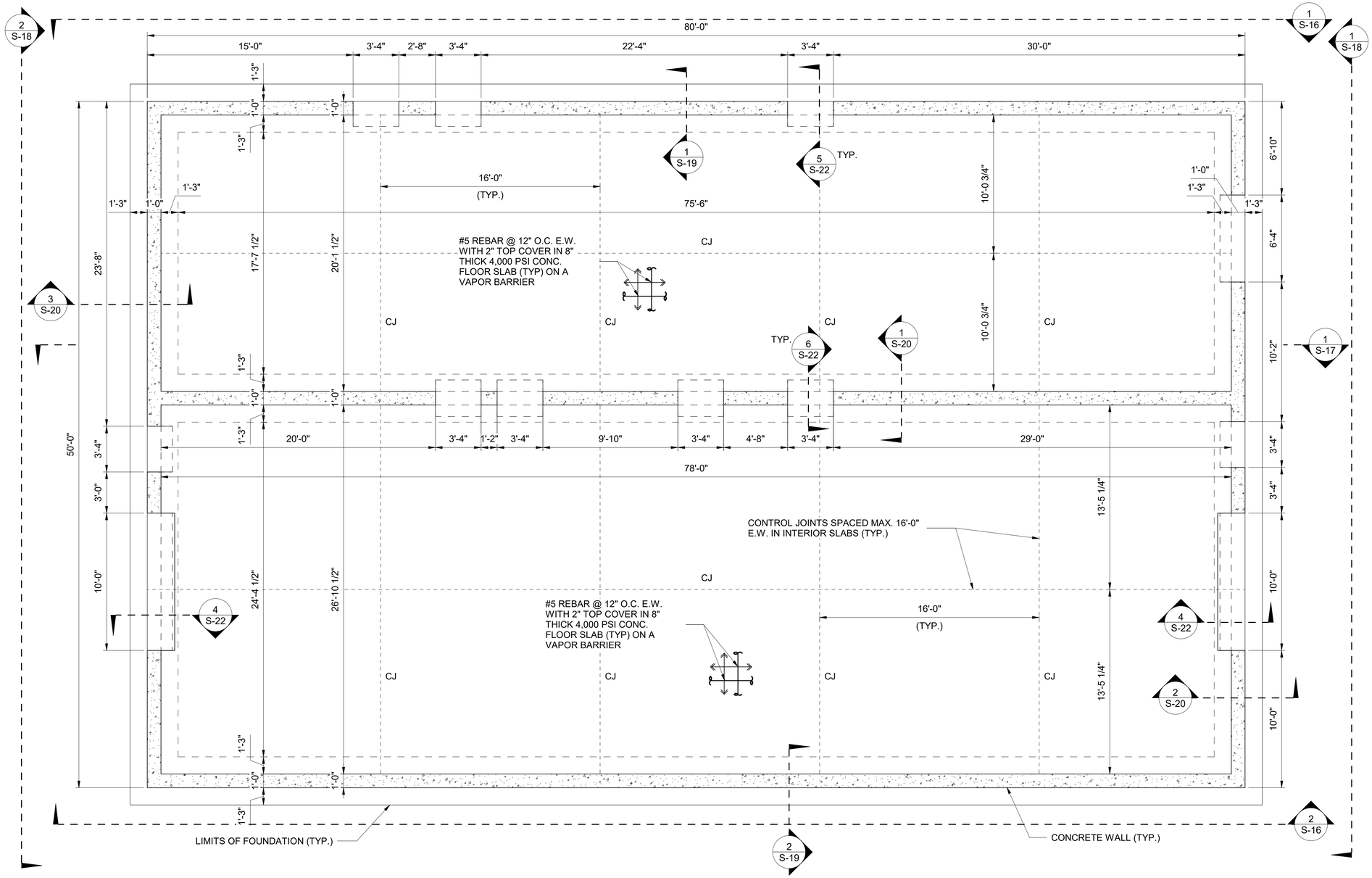
GRAPHIC SCALE IN INCHES
0 1/2" 1" 2"
0 4' 8'
80'-0"
15'-0"
3'-4"
2'-8"
3'-4"
22'-4"
3'-4"
30'-0"
1'-3"
1'-0"
1'-0"
1'-3"
1'-3"
1'-0"
1'-3"
1'-3"
1'-0"
1'-3"
1'-0"
1'-3"
1'-0

GRAPHIC SCALE IN INCHES

0 1/2" 1" 2"

0 4' 8'

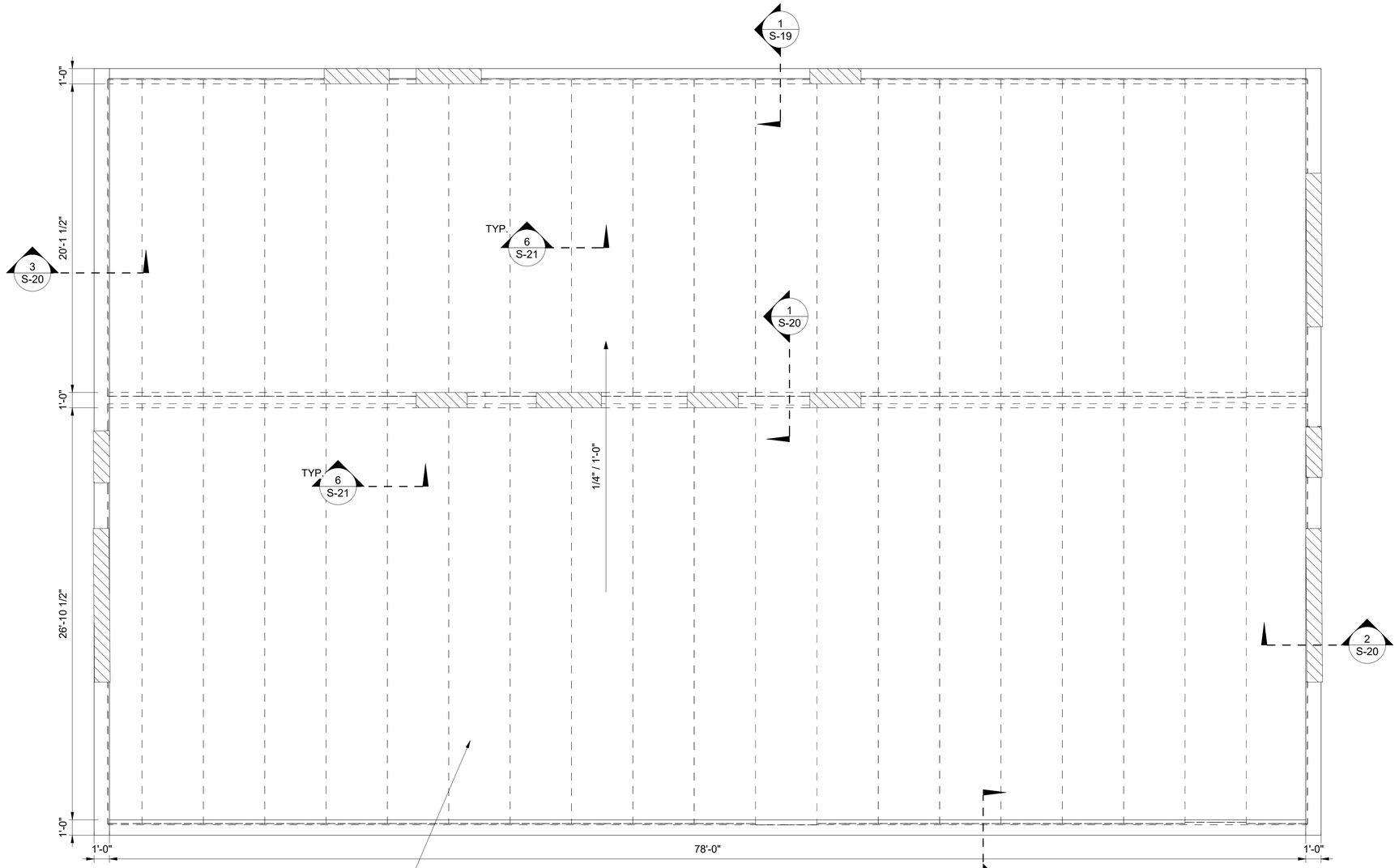

8" THICK PRECAST CONCRETE HOLLOW CORE ROOF SLABS WITH 2" STRUCTURAL TOPPING. GROUT KEYWAYS BETWEEN EACH SLAB FULL LENGTH OF SLAB. HOLLOW CORE ROOF SLABS ARE DELEGATED DESIGN BY ROOF SLAB MANUFACTURER'S ENGINEER.

1 / S-15 MAINTENANCE BUILDING ROOF PLAN
1/4" = 1'-0"

NORTH

LEGEND:

DOOR OPENING IN WALL BELOW ROOF.

NOTES:

1. REFER TO MECHANICAL SHEETS FOR SIZE AND LOCATION OF PROPOSED ROOF PENETRATIONS. CONTRACTOR TO COORDINATE ROOF PENETRATIONS WITH HOLLOWCORE ROOF SLAB MANUFACTURER PRIOR TO FABRICATION AND CONSTRUCTION.

CONSTRUCTION DOCUMENTS

No.	REVISIONS	DATE	BY

Kimley»Horn

EDT Sign of Quality

PROFESSIONAL ENGINEER
JON CASEY LONG
0-10005-1B
VIRGIN ISLANDS
07-13-26

KHA PROJECT 045826000
DATE JUNE 2026
SCALE: AS SHOWN
DESIGNED BY: SES
DRAWN BY: NJD
CHECKED BY: SES

BUILDING ROOF FRAMING PLAN

LBJ SEWERSHED REHABILITATION
PREPARED FOR
VIWMA

SHEET NUMBER
S-15

Autodesk Docs://045826000 SI Cross LBJ Pump Station/LBJ Masonry Pump Station Building R2024.rvt
This document, together with the concepts and designs presented herein, as an instrument of service, is intended only for the specific purpose and client for which it was prepared. Reuse of and improper reliance on this document without written authorization and adaptation by Kimley-Horn and Associates, Inc. shall be without liability to Kimley-Horn and Associates, Inc.

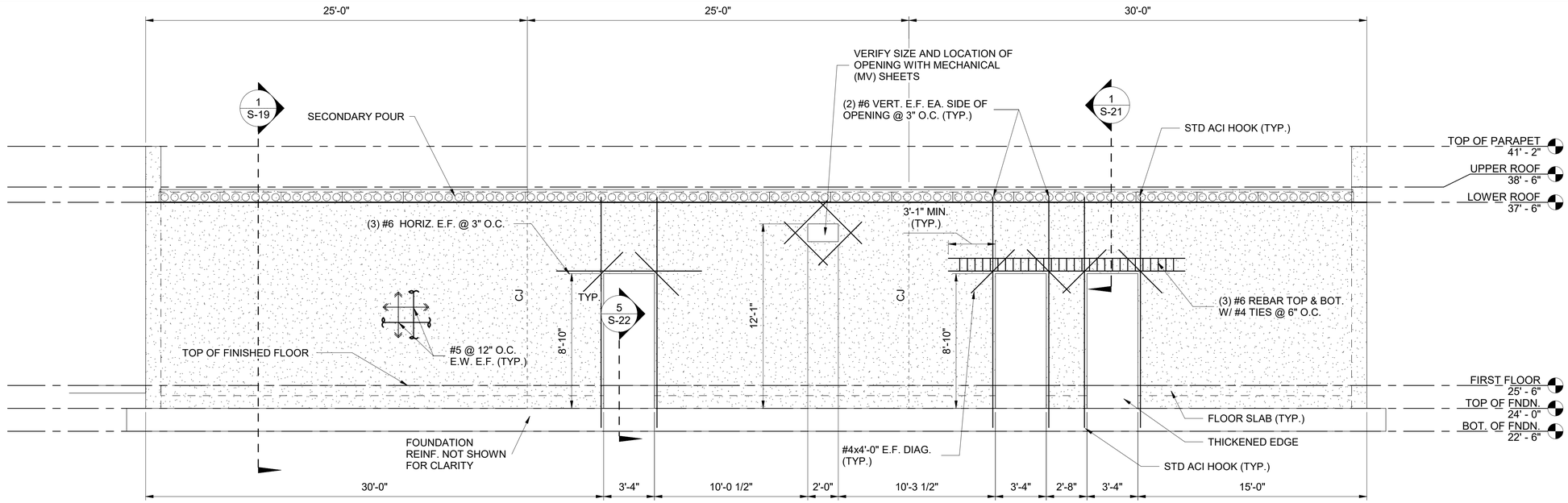

1 / S-16 MAINTENANCE BUILDING - NORTH WALL ELEVATION
1/4" = 1'-0"

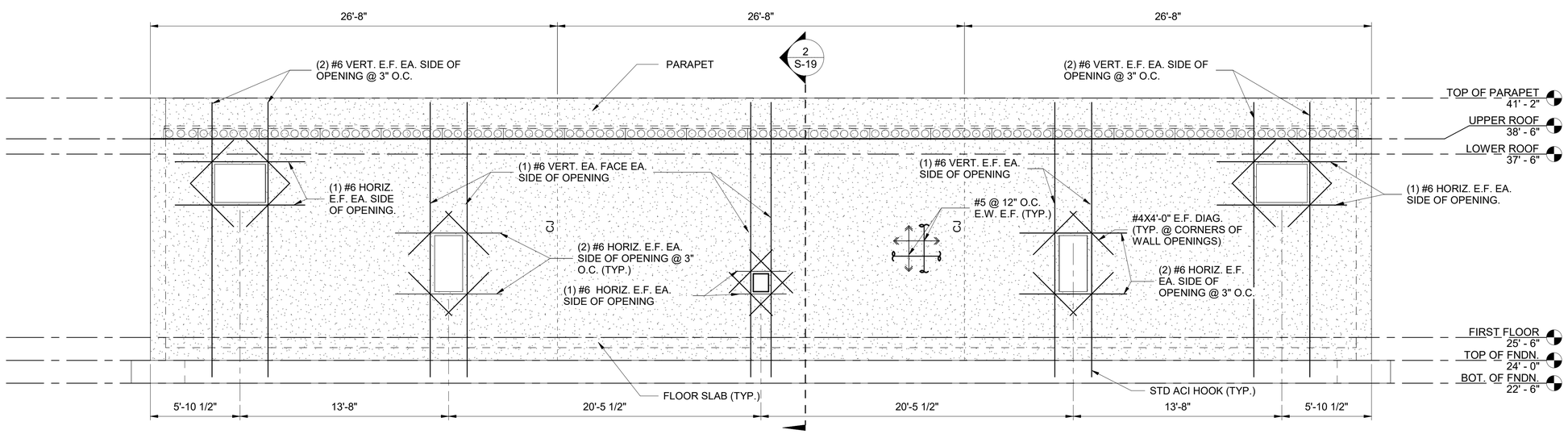

2 / S-16 MAINTENANCE BUILDING - SOUTH WALL ELEVATION
1/4" = 1'-0"

NOTES:

1. VERIFY SIZE AND LOCATION OF OPENINGS WITH MECHANICAL (MV) SHEETS.

CONSTRUCTION DOCUMENTS

No.	REVISIONS	DATE	BY

Kimley»Horn

PROFESSIONAL ENGINEER
JON CASEY LONG
0-10005-1B
U.S. VIRGIN ISLANDS
07-13-26

KHA PROJECT 045826000
DATE JUNE 2026
SCALE: AS SHOWN
DESIGNED BY: SES
DRAWN BY: RJD
CHECKED BY: SES

BUILDING ELEVATIONS

LBJ SEWERSHED REHABILITATION
PREPARED FOR
VIWMA

SHEET NUMBER
S-16

Autodesk Docs://045826000 St Croix LBJ Pump Station/LBJ Masonry Pump Station Building R2024.rvt
This document, together with the concepts and designs presented herein, as an instrument of service, is intended only for the specific purpose and client for which it was prepared. Reuse of and improper reliance on this document without written authorization and adaptation by Kimley-Horn and Associates, Inc. shall be without liability to Kimley-Horn and Associates, Inc.

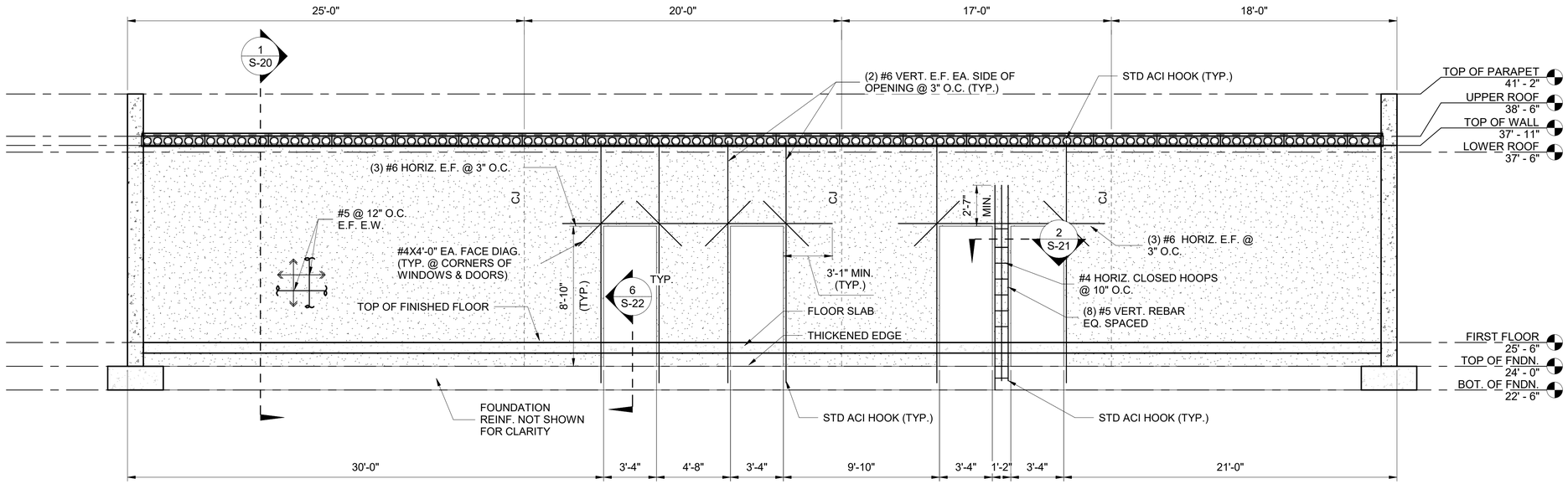

1 / S-17 MAINTENANCE BUILDING - INTERIOR BEARING WALL ELEVATION LOOKING SOUTH
1/4" = 1'-0"

CONSTRUCTION DOCUMENTS

No.	REVISIONS	DATE	BY

Kimley»Horn

PROFESSIONAL ENGINEER
JON CASEY LONG
0-10005-1B
U.S. VIRGIN ISLANDS
07-13-26

KHA PROJECT 045826000	
DATE JUNE 2026	
SCALE: AS SHOWN	
DESIGNED BY:	SES
DRAWN BY:	NJQ
CHECKED BY:	SES

BUILDING ELEVATIONS

LBJ SEWERSHED REHABILITATION
PREPARED FOR
VIWMA

SHEET NUMBER
S-17

Autodesk Docs://045826000 St Croix LBJ Pump Station/LBJ Masonry Pump Station Building R2024.rvt
This document, together with the concepts and designs presented herein, as an instrument of service, is intended only for the specific purpose and client for which it was prepared. Reuse of and improper reliance on this document without written authorization and adaptation by Kimley-Horn and Associates, Inc. shall be without liability to Kimley-Horn and Associates, Inc.

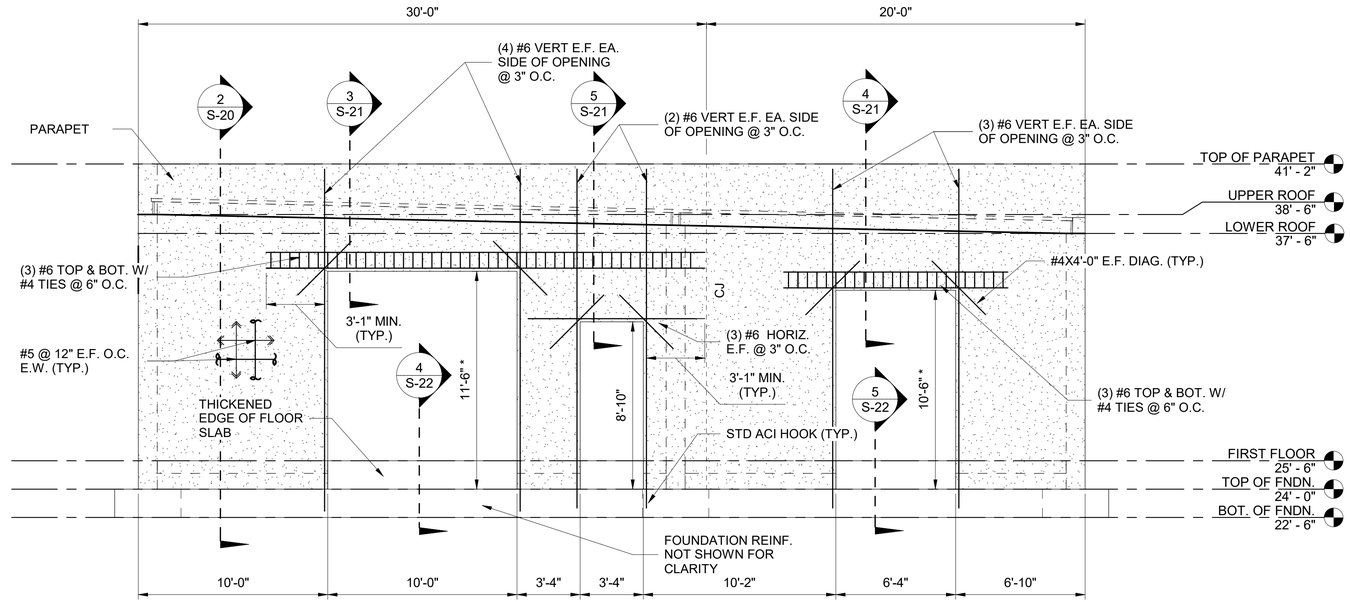

*VERIFY WITH ARCHITECTURAL SHEETS

1 / S-18 MAINTENANCE BUILDING - EAST WALL ELEVATION
1/4" = 1'-0"

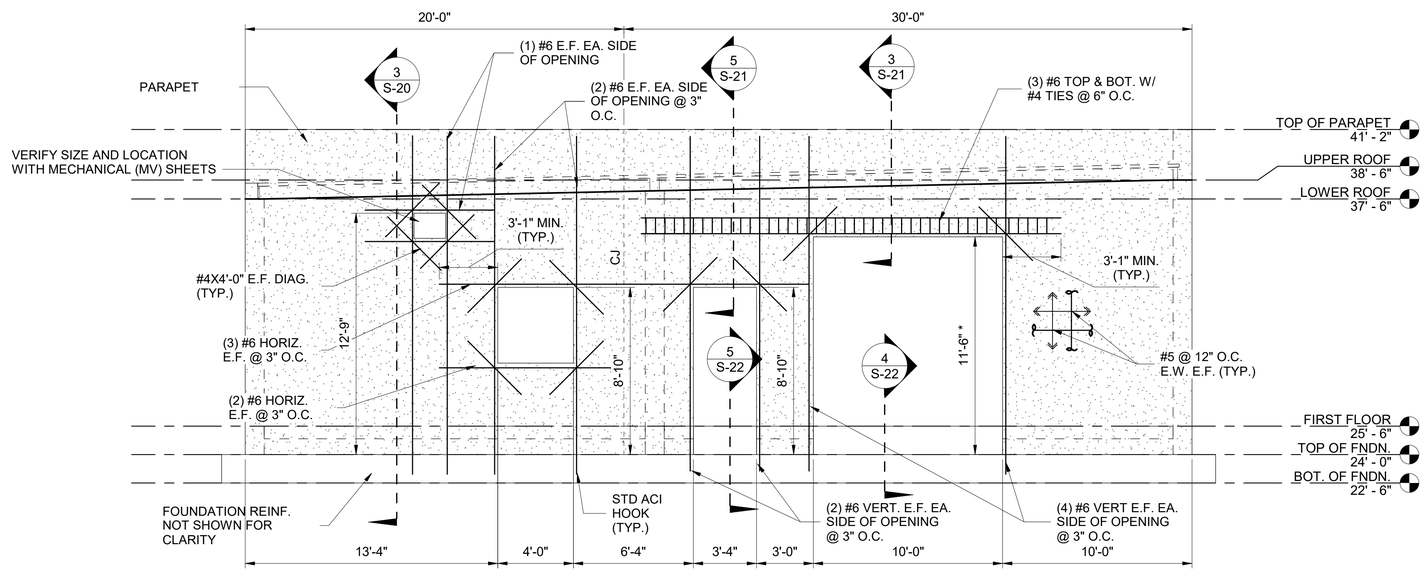

*VERIFY WITH ARCHITECTURAL SHEETS

2 / S-18 MAINTENANCE BUILDING - WEST WALL ELEVATION DETAIL
1/4" = 1'-0"

CONSTRUCTION DOCUMENTS

No.	REVISIONS	DATE	BY

Kimley»Horn

PROFESSIONAL ENGINEER
JON CASEY LONG
0-10005-1B
VIRGIN ISLANDS
07-13-26

KHA PROJECT 045826000
DATE JUNE 2026
SCALE: AS SHOWN
DESIGNED BY: SES
DRAWN BY: NJD
CHECKED BY: SES

BUILDING ELEVATIONS

LBJ SEWERSHED REHABILITATION
PREPARED FOR
VIWMA

SHEET NUMBER
S-18

Autodesk Docs://045826000 St Croix LBJ Pump Station LBJ Masonry Pump Station Building 1920241.rvt
This document, together with the concepts and designs presented herein, as an instrument of service, is intended only for the specific purpose and client for which it was prepared. Reuse of and improper reliance on this document without written authorization and adaptation by Kimley-Horn and Associates, Inc. shall be without liability to Kimley-Horn and Associates, Inc.

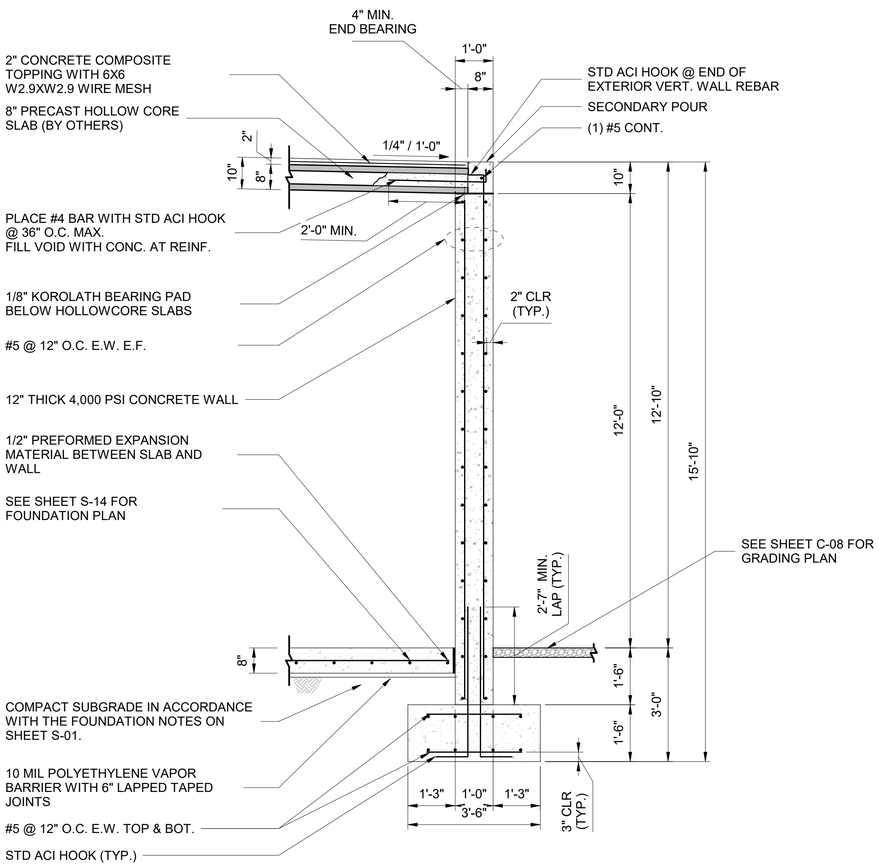

1 / S-19 NORTH WALL SECTION DETAIL (TYP.)
1/2" = 1'-0"

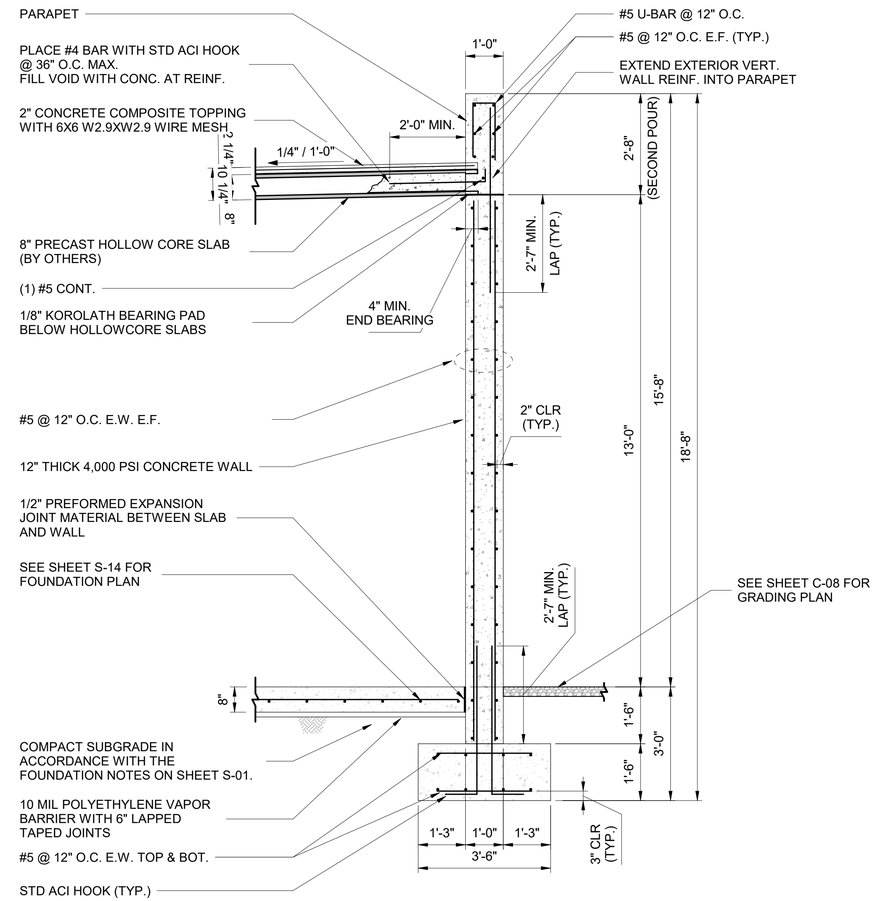

2 / S-19 SOUTH WALL SECTION DETAIL (TYP.)
1/2" = 1'-0"

CONSTRUCTION DOCUMENTS

No.	REVISIONS	DATE	BY

Kimley»Horn

PROFESSIONAL ENGINEER
JON CASEY LONG
0-10005-1B
U.S. VIRGIN ISLANDS
07-13-26

KHA PROJECT 045826000
DATE JUNE 2026
SCALE: AS SHOWN
DESIGNED BY: SES
DRAWN BY: NDQ
CHECKED BY: SES

STRUCTURAL WALL SECTIONS

LBJ SEWERSHED REHABILITATION
PREPARED FOR
VIWMA

SHEET NUMBER
S-19

This document, together with the concepts and designs presented herein, as an instrument of service, is intended only for the specific purpose and client for which it was prepared. Reuse of and improper reliance on this document without written authorization and adaptation by Kimley-Horn and Associates, Inc. shall be without liability to Kimley-Horn and Associates, Inc.

Autodesk Docs://045826000 St Croix LBJ Pump Station LBJ Masonry Pump Station Building Y2024.rvt

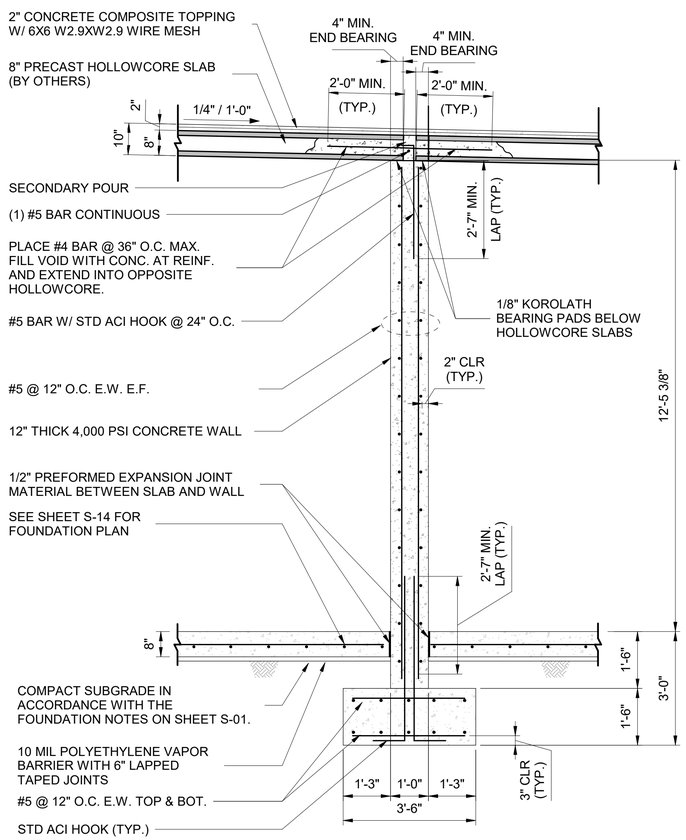

1 S-20 INTERIOR BEARING WALL SECTION DETAIL (TYP.)
1/2" = 1'-0"

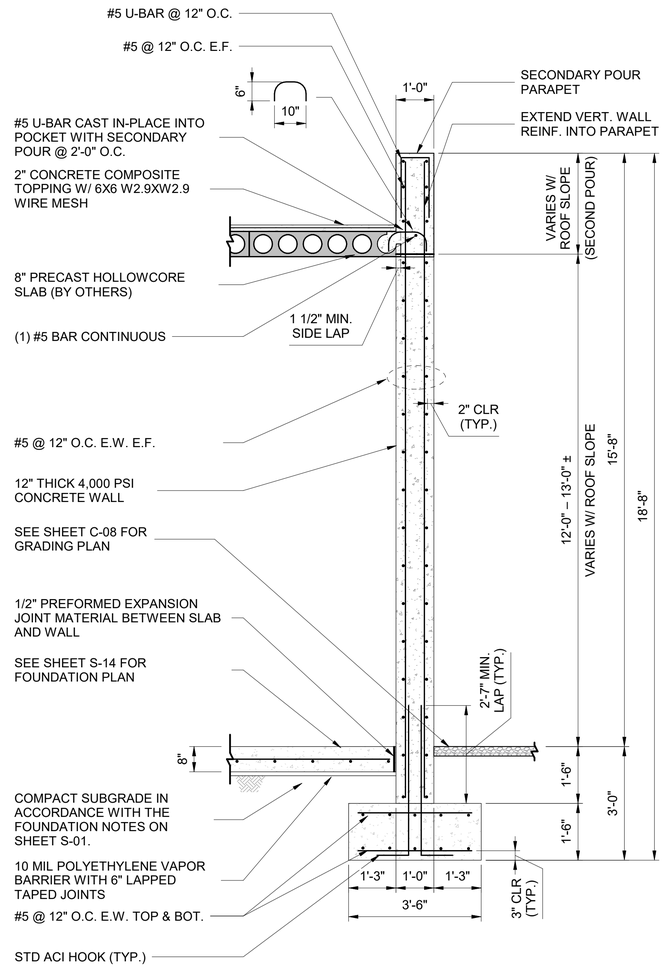

2 S-20 EAST WALL SECTION DETAIL (TYP.)
1/2" = 1'-0"

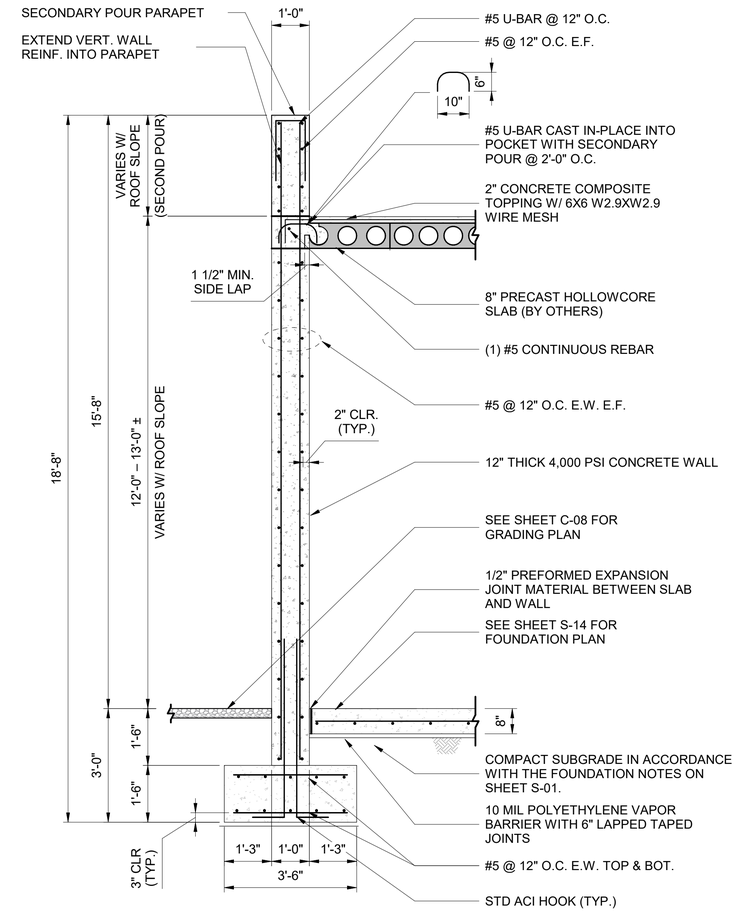

3 S-20 WEST WALL SECTION DETAIL (TYP.)
1/2" = 1'-0"

CONSTRUCTION DOCUMENTS

No.	REVISIONS	DATE	BY

Kimley»Horn

PROFESSIONAL ENGINEER
JON CASEY LONG
0-10005-1B
VIRGIN ISLANDS
07-13-26

KHA PROJECT 045826000
DATE JUNE 2026
SCALE: AS SHOWN
DESIGNED BY: SES
DRAWN BY: NJD
CHECKED BY: SES

STRUCTURAL WALL SECTIONS

LBJ SEWERSHED REHABILITATION
PREPARED FOR
VIWMA

SHEET NUMBER
S-20

Autodesk Docs://045826000 St Croix LBJ Pump Station/LBJ Masonry Pump Station Building r22024.rvt
This document, together with the concepts and designs presented herein, as an instrument of service, is intended only for the specific purpose and client for which it was prepared. Reuse of and improper reliance on this document without written authorization and adaptation by Kimley-Horn and Associates, Inc. shall be without liability to Kimley-Horn and Associates, Inc.

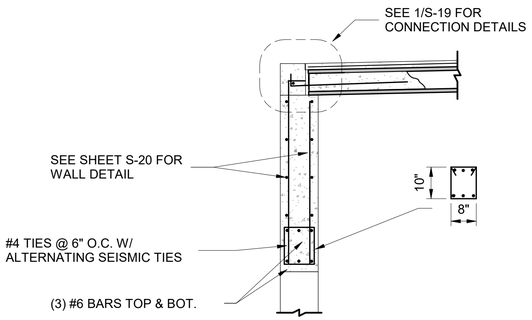

1 / S-21 TYPICAL END WALLS OPENING DETAIL
1/2" = 1'-0"

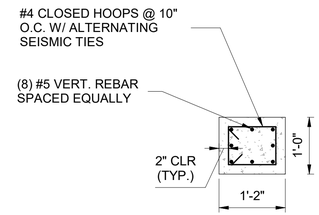

2 / S-21 INTERIOR BEARING COLUMN SECTION DETAIL
3/4" = 1'-0"

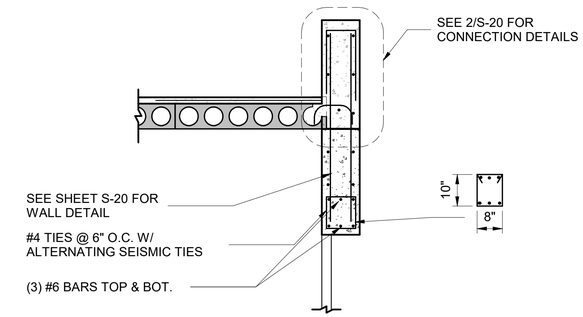

3 / S-21 TYPICAL GARAGE DOOR OPENING DETAIL
1/2" = 1'-0"

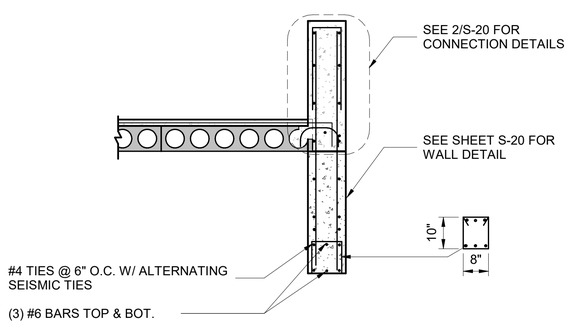

4 / S-21 TYPICAL TRANSVERSE WALLS OPENING DETAIL
1/2" = 1'-0"

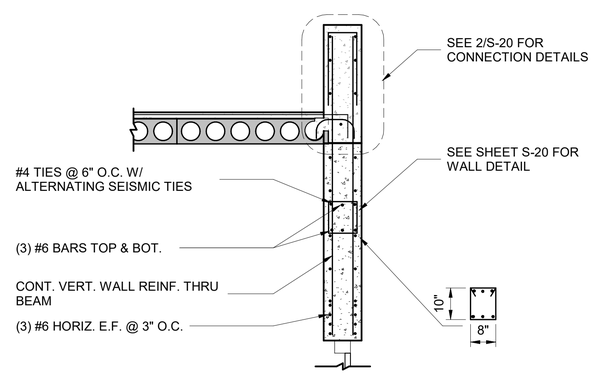

5 / S-21 TYPICAL CONTINUOUS BEAM OVER OPENING IN TRANSVERSE WALLS
1/2" = 1'-0"

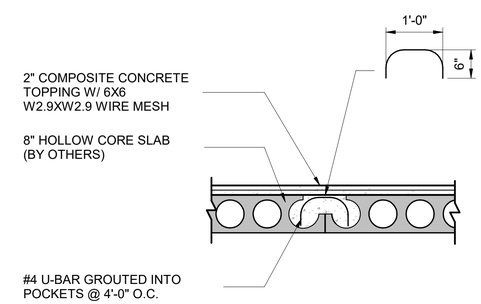

6 / S-21 TYPICAL HOLLOW CORE JOINT CONNECTION DETAIL
3/4" = 1'-0"

CONSTRUCTION DOCUMENTS

No.	REVISIONS	DATE	BY

Kimley»Horn

PROFESSIONAL ENGINEER
JON CASEY LONG
0-10005-1B
ST. THOMAS VIRGIN ISLANDS
07-13-26

K+H PROJECT 045826000	
DATE JUNE 2026	
SCALE: AS SHOWN	
DESIGNED BY:	SES
DRAWN BY:	NJD
CHECKED BY:	SES

STRUCTURAL DETAILS

LBJ SEWERSHED REHABILITATION
PREPARED FOR
VIWMA

SHEET NUMBER
S-21

Autodesk Docs://045826000 St Croix LBJ Pump Station/LBJ Masonry Pump Station Building R2026.rvt
This document, together with the concepts and designs presented herein, as an instrument of service, is intended only for the specific purpose and client for which it was prepared. Reuse of and improper reliance on this document without written authorization and adaptation by Kimley-Horn and Associates, Inc. shall be without liability to Kimley-Horn and Associates, Inc.

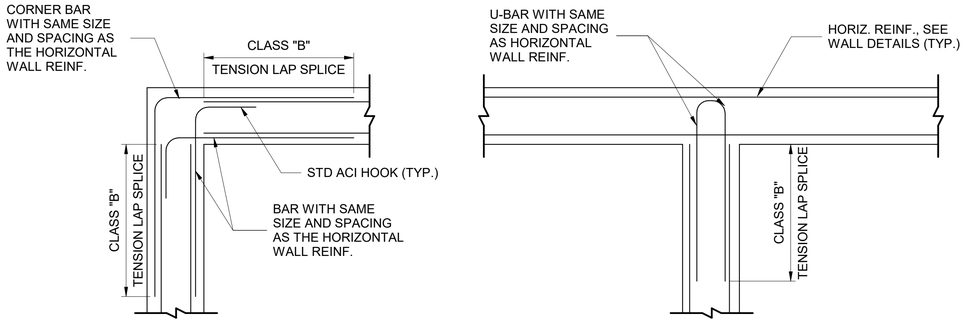

1 / S-22 TYPICAL BUILDING WALL INTERSECTION HORIZONTAL REINFORCEMENT DETAIL
N.T.S.

NOTE: VERTICAL REINFORCEMENT NOT SHOWN FOR CLARITY.
SEE 2/S-26 AND 3/S-26 FOR TANK WALL INTERSECTION DETAILS.

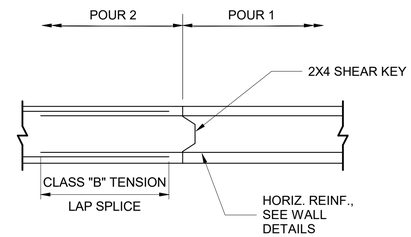

2 / S-22 TYPICAL WALL CONSTRUCTION JOINT
N.T.S.

NOTE: VERTICAL REINFORCEMENT NOT SHOWN FOR CLARITY

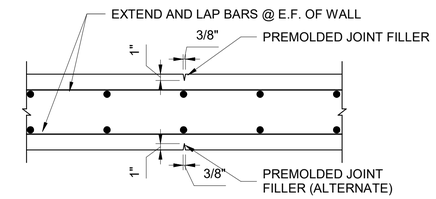

3 / S-22 TYPICAL WALL CONTROL JOINT DETAIL
N.T.S.

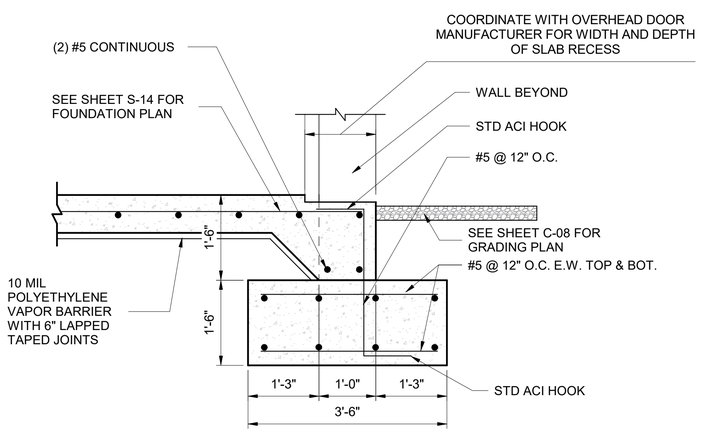

4 / S-22 TYPICAL THICKENED SLAB AT OVERHEAD DOORWAYS
3/4" = 1'-0"

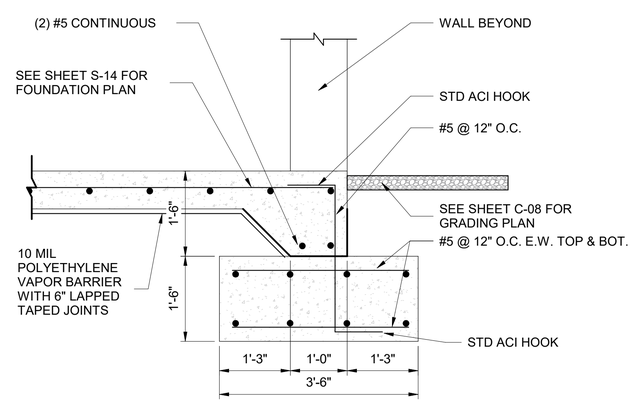

5 / S-22 THICKENED SLAB AT EXTERIOR DOORWAYS (TYP.)
3/4" = 1'-0"

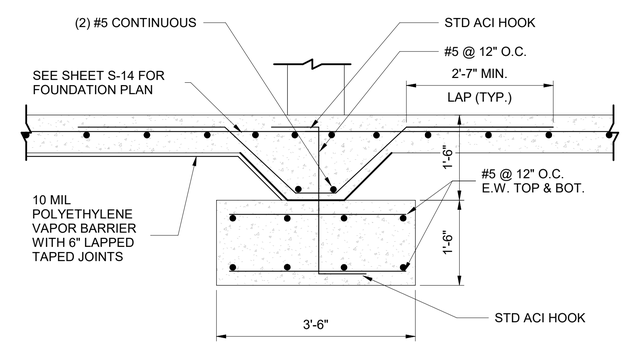

6 / S-22 THICKENED SLAB AT INTERIOR WALL DOORWAYS (TYP.)
3/4" = 1'-0"

CONSTRUCTION DOCUMENTS

No.	REVISIONS	DATE	BY

Kimley»Horn

PROFESSIONAL ENGINEER
JON CASEY LONG
0-10005-1B
U.S. VIRGIN ISLANDS
07-13-26

KHA PROJECT	045826000
DATE	JUNE 2026
SCALE: AS SHOWN	
DESIGNED BY:	SES
DRAWN BY:	NJQ
CHECKED BY:	SES

STRUCTURAL DETAILS

LBJ SEWERSHED REHABILITATION
PREPARED FOR
VIWMA

SHEET NUMBER
S-22

Autodesk Docs://045826000 St Croix LBJ Pump Station/LBJ Masonry Pump Station Building R2024.rvt
This document, together with the concepts and designs presented herein, as an instrument of service, is intended only for the specific purpose and client for which it was prepared. Reuse of and improper reliance on this document without written authorization and adaptation by Kimley-Horn and Associates, Inc. shall be without liability to Kimley-Horn and Associates, Inc.

REBAR MINIMUM TENSION DEVELOPMENT & LAP/SPLICE LENGTHS									
BAR SIZE	CONCRETE STRENGTH 5,000 PSI > fc ≥ 4,000 PSI				BAR SIZE	CONCRETE STRENGTH fc ≥ 5,000 PSI			
	DEVELOPMENT LENTGTH, ld		LAP LENGTH (CLASS B SPLICE)			DEVELOPMENT LENTGTH, ld		LAP LENGTH (CLASS B SPLICE)	
	TOP BARS	OTHER BARS	TOP BARS	OTHER BARS		TOP BARS	OTHER BARS	TOP BARS	OTHER BARS
#3	1'-7"	1'-4"	2'-1"	1'-7"	#3	1'-5"	1'-1"	1'-10"	1'-5"
#4	2'-1"	1'-7"	2'-9"	2'-1"	#4	1'-11"	1'-5"	2'-5"	1'-11"
#5	2'-7"	2'-0"	3'-5"	2'-7"	#5	2'-4"	1'-10"	3'-0"	2'-4"
#6	3'-1"	2'-5"	4'-1"	3'-1"	#6	2'-10"	2'-2"	3'-8"	2'-10"
#7	4'-6"	3'-6"	5'-11"	4'-6"	#7	4'-1"	3'-2"	5'-3"	4'-1"
#8	5'-2"	4'-0"	6'-9"	5'-2"	#8	4'-8"	3'-7"	6'-0"	4'-8"
#9	5'-10"	4'-6"	7'-7"	5'-10"	#9	5'-3"	4'-0"	6'-9"	5'-3"
#10	6'-7"	5'-1"	8'-6"	6'-7"	#10	5'-11"	4'-6"	7'-8"	5'-11"
#11	7'-3"	5'-8"	9'-6"	7'-3"	#11	6'-6"	5'-0"	8'-6"	6'-6"

NOTES:
1. GRADE 60 UNCOATED REINFORCEMENT
2. SPLICE LENGTHS GIVEN ABOVE ARE TO BE USED UNLESS NOTED OTHERWISE ON DESIGN DRAWINGS.
3. TOP REINFORCEMENT IS HORIZONTAL REINFORCEMENT SO PLACED THAT MORE THAT 12 INCHES OF FRESH CONCRETE IS CAST IN THE MEMBER BELOW THE REINFORCEMENT
4. LENGTHS SHOWN IN THE CHART SHALL BE MODIFIED WHERE REQUIRED TO CONFORM TO THE REQUIREMENTS OF ACI 318-19.

STANDARD HOOK DEVELOPMENT LENGTH			
BAR SIZE	CONCRETE STRENGTH fc ≥ 4,000 PSI		
	90 STD HOOK "A"	180 STD HOOK "J"	DEVELOPMENT LENGTH, Ldh
#3	6"	3"	6"
#4	8"	4"	7"
#5	10"	5"	9"
#6	1'-0"	6"	10"
#7	1'-2"	7"	1'-0"
#8	1'-4"	8"	1'-2"
#9	1'-7"	11-3/4"	1'-3"
#10	1'-10"	1'-1-1/4"	1'-5"
#11	2'-0"	1'-2-3/4"	1'-7"

NOTES:
1. FOR STD HOOK BAR GEOMETRY NOT SHOWN REFER TO MINIMUM ACI REQUIREMENTS.
2. ASSUMED SIDE COVER NORMAL TO PLANE OF HOOK AT LEAST 2 1/2"; AND FOR 90 STD HOOK, END COVER BEYOND OUTSIDE END OF HOOK AT LEAST 2".
3. CONCRETE STRENGTH F'C = 4,000 PSI OR GREATER.

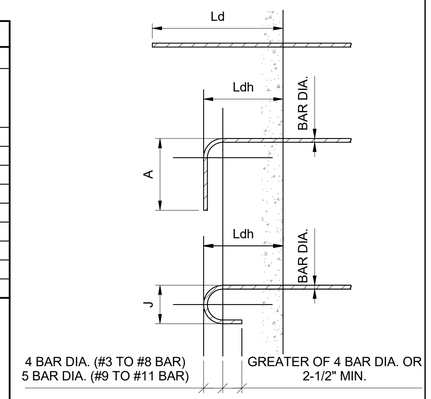

1 / S-23 STANDARD REINFORCEMENT DETAILS
SCALE: NONE

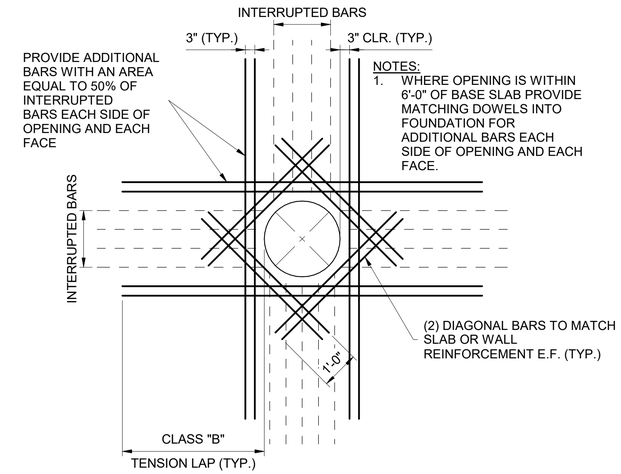

2 / S-23 REINF AT TANK CIRCULAR OPENINGS GREATER THAN 12"
SCALE: NONE

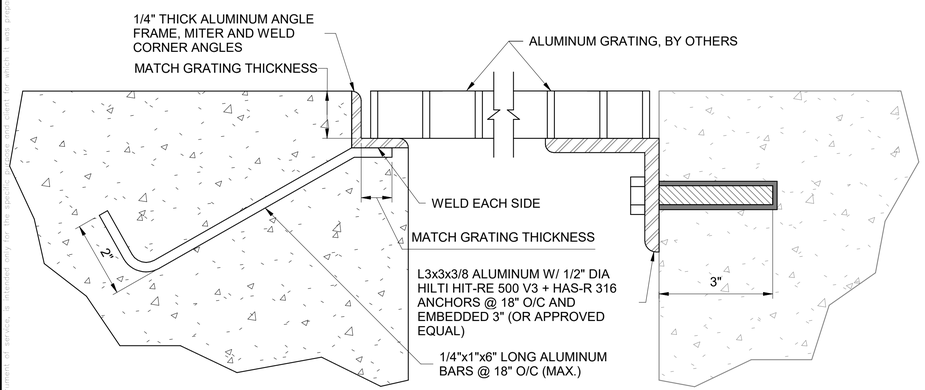

NOTES:
1. PROVIDE A BITUMINOUS COATING ON ALL ALUMINUM SURFACES TO BE IN CONTACT WITH OR CAST INTO CONCRETE.

3 / S-23 GRATING AND GRATING SUPPORT DETAIL
SCALE: NONE

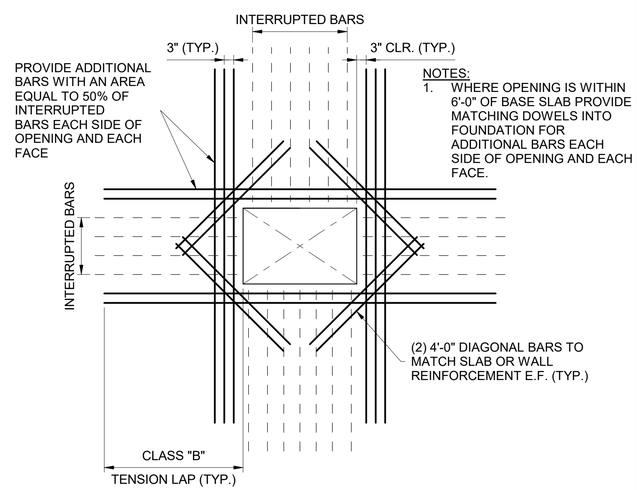

4 / S-23 REINF AT TANK RECTANGULAR OPENINGS GREATER THAN 12"
SCALE: NONE

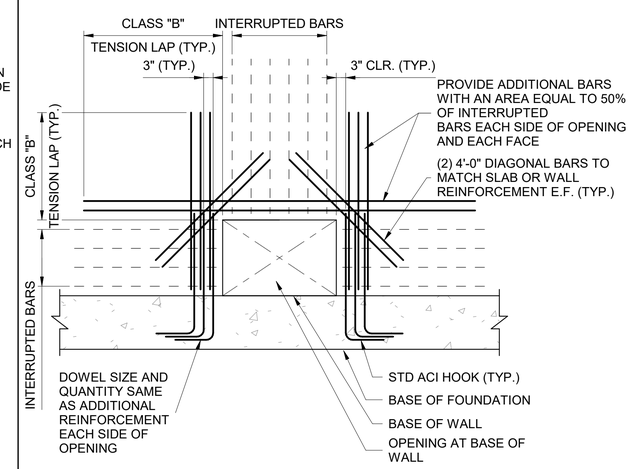

5 / S-23 REINF AT TANK RECTANGULAR OPENINGS GREATER THAN 12" AT BASE OF WALL
SCALE: NONE

CONSTRUCTION DOCUMENTS

No.	REVISIONS	DATE	BY

Kimley»Horn

PROFESSIONAL ENGINEER
JON CASEY LONG
0-10005-1B
U.S. VIRGIN ISLANDS
07-13-26

KHA PROJECT 045826000	
DATE JUNE, 2026	
SCALE: AS SHOWN	
DESIGNED BY: SES	
DRAWN BY: NJD	
CHECKED BY: SES	

STRUCTURAL STANDARD DETAILS

LBJ SEWERSHED REHABILITATION
PREPARED FOR
VIWMA

SHEET NUMBER
S-23

Autodesk Docs://045826000 St Croix LBJ Pump Station LBJ Sewershed - Structural Set/4
This document, together with the concepts and designs presented herein, as an instrument of service, is intended only for the specific purpose and client for which it was prepared. Reuse of and improper reliance on this document without written authorization and adaptation by Kimley-Horn and Associates, Inc. shall be without liability to Kimley-Horn and Associates, Inc.

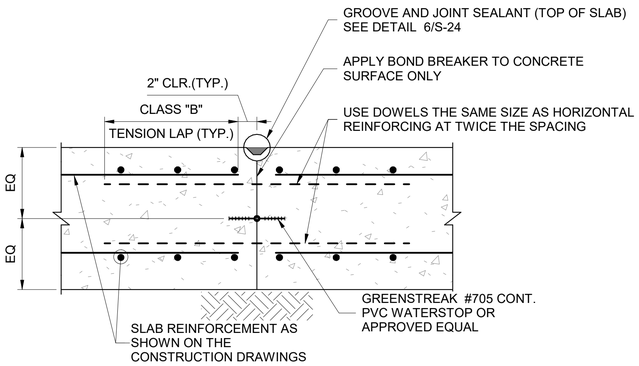

NOTES:
1. CONTRACTOR SUBMIT LOCATION FOR APPROVAL IF NOT SPECIFIED.
2. ALLOW 48 HOURS BETWEEN PLACEMENT OF INITIAL CAST AND SUBSEQUENT CASTS.

1 / S-24 TANK BASE SLAB PARTIAL CONTRACTION JOINT DETAIL
SCALE: NONE

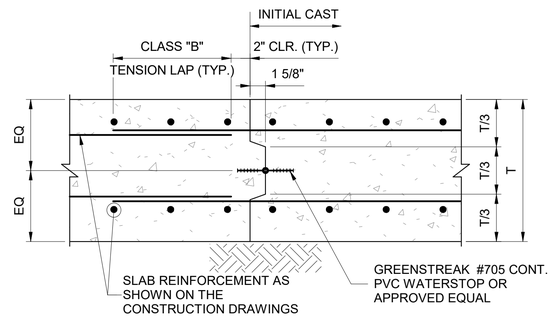

NOTES:
1. CONTRACTOR SUBMIT LOCATION FOR APPROVAL IF NOT SPECIFIED.
2. ALLOW 48 HOURS BETWEEN PLACEMENT OF INITIAL CAST AND SUBSEQUENT CASTS.

2 / S-24 TANK BASE SLAB CONSTRUCTION JOINT DETAIL
SCALE: NONE

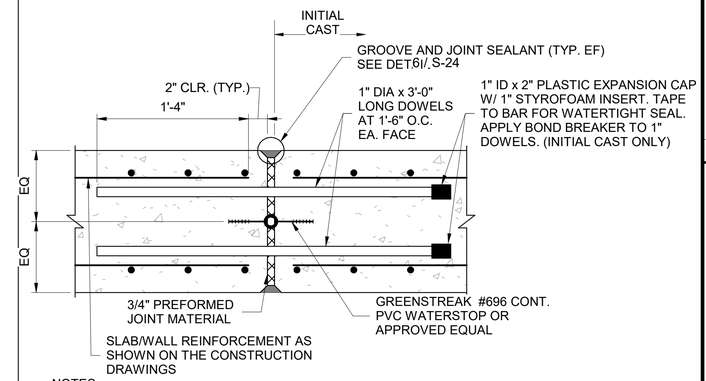

NOTES:
1. CONTRACTOR SUBMIT LOCATION FOR APPROVAL IF NOT SPECIFIED.
2. ALLOW 48 HOURS BETWEEN PLACEMENT OF INITIAL CAST AND SUBSEQUENT CASTS.
3. STOP WATER STOP 6" BELOW TOP OF WALL.

3 / S-24 TANK BASE SLAB AND WALL EXPANSION VERTICAL JOINT DETAIL
SCALE: NONE

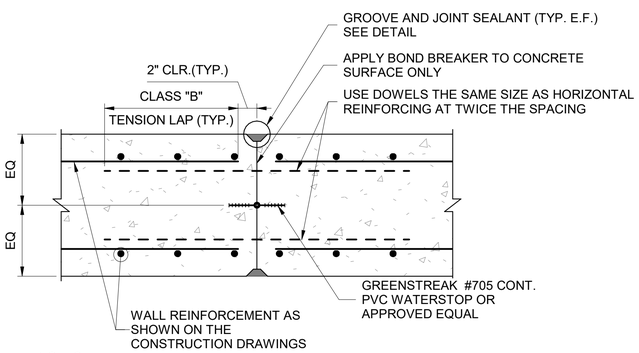

NOTES:
1. CONTRACTOR SUBMIT LOCATION FOR APPROVAL IF NOT SPECIFIED.
2. ALLOW 48 HOURS BETWEEN PLACEMENT OF INITIAL CAST AND SUBSEQUENT CASTS.
3. STOP WATER STOP 6" BELOW TOP OF WALL.

4 / S-24 TANK WALL PARTIAL CONTRACTION VERTICAL JOINT DETAIL
SCALE: NONE

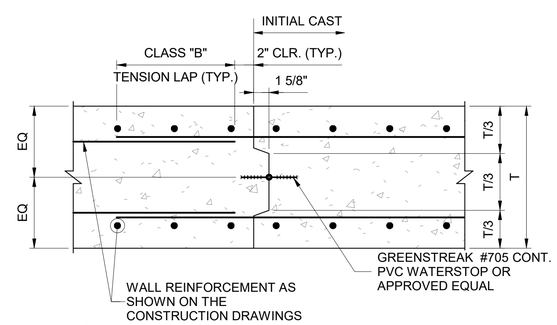

NOTES:
1. CONTRACTOR SUBMIT LOCATION FOR APPROVAL IF NOT SPECIFIED.
2. ALLOW 48 HOURS BETWEEN PLACEMENT OF INITIAL CAST AND SUBSEQUENT CASTS.
3. STOP WATER STOP 6" BELOW TOP OF WALL.

5 / S-24 TANK WALL CONSTRUCTION JOINT DETAIL
SCALE: NONE

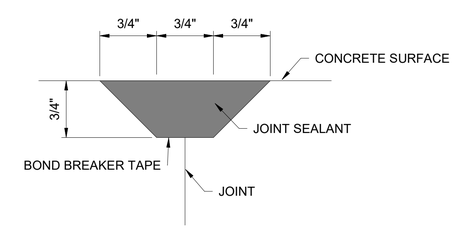

6 / S-24 GROOVE AND JOINT SEALANT DETAIL
SCALE: NONE

CONSTRUCTION DOCUMENTS

No.	REVISIONS	DATE	BY

Kimley»Horn
Sign of Quality

PROFESSIONAL ENGINEER
JON CASEY LONG
0-10005-1B
U.S. VIRGIN ISLANDS
07-13-26

KHA PROJECT 045826000	
DATE JUNE, 2026	
SCALE: AS SHOWN	
DESIGNED BY:	SES
DRAWN BY:	NDQ
CHECKED BY:	SES

STRUCTURAL
STANDARD DETAILS

LBJ SEWERSHED
REHABILITATION
PREPARED FOR
VIWMA

SHEET NUMBER
S-24

Autodesk Docs://045826000 St Croix LBJ Pump Station/LBJ_Sewershed -Structural Set.rvt
This document, together with the concepts and designs presented herein, as an instrument of service, is intended only for the specific purpose and client for which it was prepared. Reuse of and improper reliance on this document without written authorization and adaptation by Kimley-Horn and Associates, Inc. shall be without liability to Kimley-Horn and Associates, Inc.

SLAB SCHEDULE				
SLAB	T (IN.)	S (IN.)	R	NOTES
PIPE SUPPORT AND DIESEL BYPASS PUMP SLAB	10	15	#4 @ 12" O.C. E.W. TOP AND BOTTOM	SEE S-07
ODOR CONTROL SLAB	12	18	#5 @ 12" O.C. E.W. TOP AND BOTTOM	SEE S-07
GENERATOR SLAB	18	18	#6 @ 10" O.C. E.W. TOP AND BOTTOM	SEE S-03
DUMPSTER AND RAMP SLAB	8	15	#4 @ 8" O.C. E.W. CENTERED IN SLAB	SEE S-07

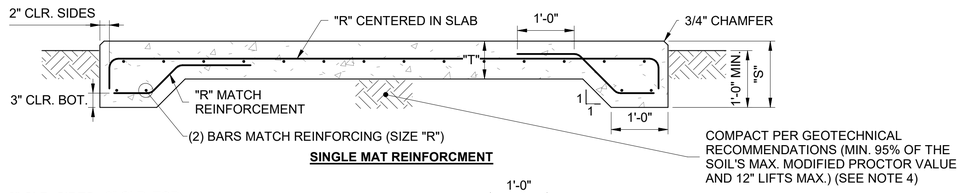

SINGLE MAT REINFORCMENT

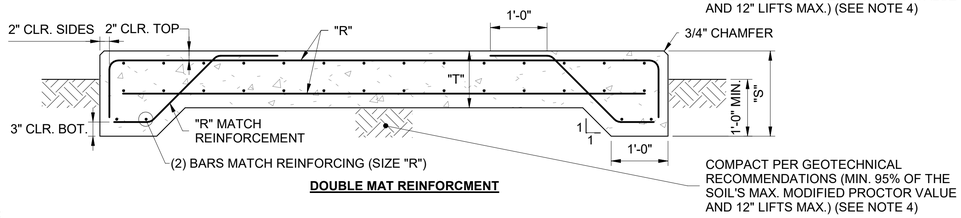

DOUBLE MAT REINFORCMENT

NOTES:
1. SEE CONSTRUCTION PLANS FOR LOCATION AND OVERALL DIMENSIONS. COORDINATE WITH MECHANICAL PLANS FOR EQUIPMENT SIZES.
2. ISOLATION PADS SHALL BE PROVIDED BY MANUFACTURER FOR VIBRATIONS, IF REQUIRED.
3. CONNECTIONS OF EQUIPMENT/PUMPS TO SLABS AND PEDESTALS SHALL BE DESIGNED BY THE EQUIPMENT/PUMP MANUFACTURERS IN ACCORDANCE WITH THE REQUIREMENTS OF THE INTERNATIONAL BUILDING CODE (2021).
4. SOIL PREPARATION BELOW FOUNDATIONS AND SLABS, INCLUDING COMPACTION SHALL BE PERFORMED IN ACCORDANCE WITH THE RECOMMENDATIONS IN THE GEOTECHNICAL REPORT REFERENCED IN THE FOUNDATIONS AND SLABS NOTES ON SHEET S-01.

1 / S-25 SLAB-ON-GRADE W/ THICKENED EDGE DETAIL
SCALE: NONE

SLAB SCHEDULE			
SLAB	T (IN.)	R	NOTES
AC SLABS	6"	#3 @ 10" O.C. CENTERED IN SLAB	SEE S-03
SLIDING GATE CONCRETE WHEEL PAD	6"	#3 @ 10" O.C. E.W. CENTERED IN SLAB	SEE C-06

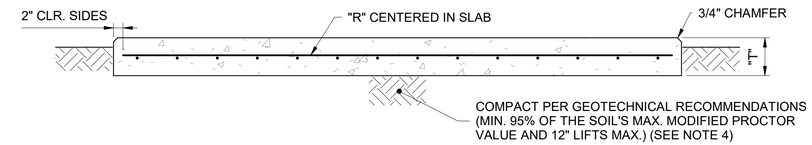

SINGLE MAT REINFORCMENT

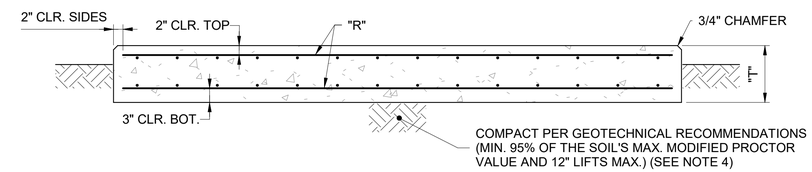

DOUBLE MAT REINFORCMENT

NOTES:
1. SEE CONSTRUCTION PLANS FOR LOCATION AND OVERALL DIMENSIONS. COORDINATE WITH MECHANICAL PLANS FOR EQUIPMENT SIZES.
2. ISOLATION PADS SHALL BE PROVIDED BY MANUFACTURER FOR VIBRATIONS, IF REQUIRED.
3. CONNECTIONS OF EQUIPMENT/PUMPS TO SLABS AND PEDESTALS SHALL BE DESIGNED BY THE EQUIPMENT/PUMP MANUFACTURERS IN ACCORDANCE WITH THE REQUIREMENTS OF THE INTERNATIONAL BUILDING CODE (2021).
4. SOIL PREPARATION BELOW FOUNDATIONS AND SLABS, INCLUDING COMPACTION SHALL BE PERFORMED IN ACCORDANCE WITH THE RECOMMENDATIONS IN THE GEOTECHNICAL REPORT REFERENCED IN THE FOUNDATIONS AND SLABS NOTES ON SHEET S-01.

2 / S-25 SLAB-ON-GRADE DETAIL
SCALE: NONE

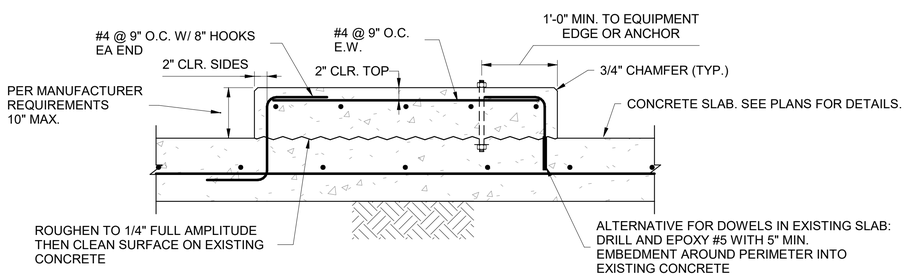

NOTES:
1. SEE CONSTRUCTION PLANS FOR LOCATION AND OVERALL DIMENSIONS. COORDINATE WITH MECHANICAL PLANS FOR EQUIPMENT SIZES.
2. CONNECTIONS OF EQUIPMENT/PUMPS TO SLABS AND PEDESTALS SHALL BE DESIGNED BY THE EQUIPMENT/PUMP MANUFACTURERS IN ACCORDANCE WITH THE REQUIREMENTS OF THE INTERNATIONAL BUILDING CODE (2021).

3 / S-25 EQUIPMENT / HOUSEKEEPING PAD
SCALE: NONE

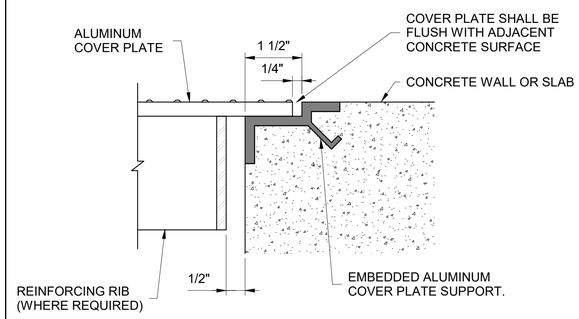

NOTES:
1. ALUMINUM COVER PLATE AND ASSOCIATED SUPPORTS AND CONNECTIONS ARE DELEGATED DESIGN BY OTHERS.
2. PROVIDE AN APPROVED BITUMINOUS COATING OR PHYSICAL SEPARATOR ON ALL ALUMINUM SURFACES TO BE IN CONTACT WITH OR CAST INTO CONCRETE.

4 / S-25 ALUMINUM COVER PLATE
SCALE: NONE

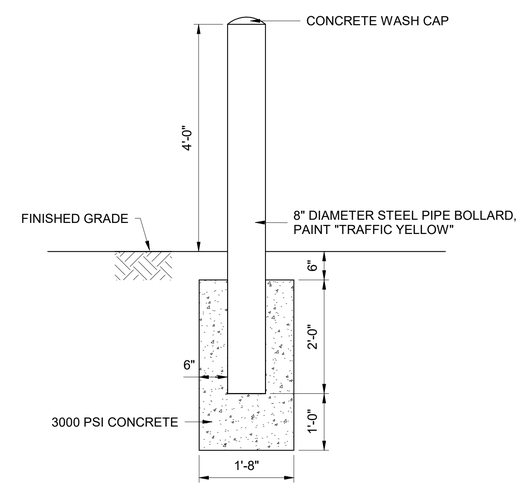

5 / S-25 BOLLARD DETAIL
SCALE: NONE

CONSTRUCTION DOCUMENTS

No.	REVISIONS	DATE	BY

Kimley»Horn

PROFESSIONAL ENGINEER
JON CASEY LONG
0-10005-1B
U.S. VIRGIN ISLANDS
07-13-26

KHA PROJECT 045826000
DATE JUNE, 2026
SCALE: AS SHOWN
DESIGNED BY: SES
DRAWN BY: NJD
CHECKED BY: SES

STRUCTURAL STANDARD DETAILS

LBJ SEWERSHED REHABILITATION
PREPARED FOR
VIWMA

SHEET NUMBER
S-25

Autodesk Docs://045826000 St Croix LBJ Pump Stations LBJ Sewershed - Structural Set v4
This document, together with the concepts and designs presented herein, as an instrument of service, is intended only for the specific purpose and client for which it was prepared. Reuse of and improper reliance on this document without written authorization and adaptation by Kimley-Horn and Associates, Inc. shall be without liability to Kimley-Horn and Associates, Inc.

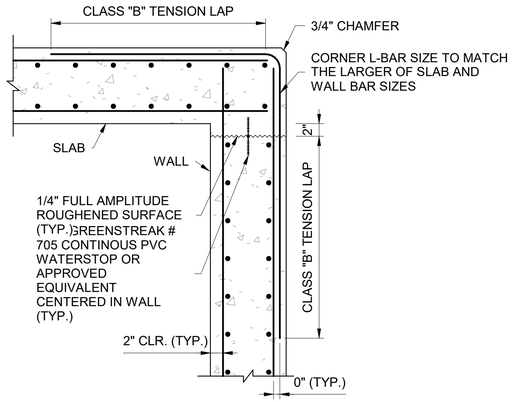

NOTES:

1. REFER TO INDIVIDUAL STRUCTURE PLANS FOR WALL AND SLAB THICKNESSES AND REINFORCING.

1 / S-26 TANK SLAB AT TOP LEVEL ON WALL
SCALE: NONE

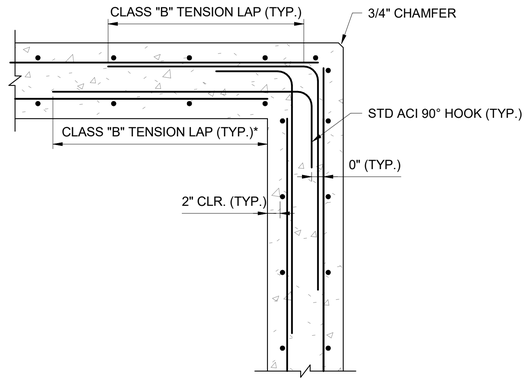

NOTES:

1. REFER TO INDIVIDUAL STRUCTURE PLANS FOR WALL THICKNESSES AND REINFORCING.
2. * INDICATES CONTRACTOR OPTION: CONTINUOUS HORIZONTAL BAR TERMINATING IN STD ACI HOOK IN LIEU OF SEPARATE BAR WITH TENSION LAP SPLICE.

2 / S-26 TANK DOUBLE MAT WALL REINFORCEMENT AT CORNERS
SCALE: NONE

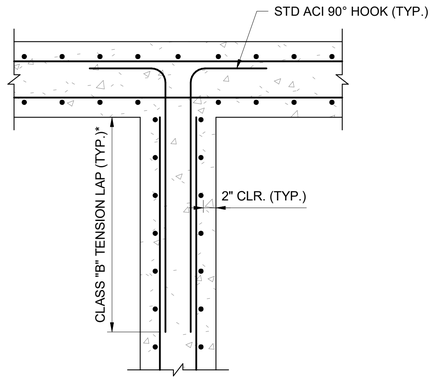

NOTES:

1. REFER TO INDIVIDUAL STRUCTURE PLANS FOR WALL THICKNESSES AND REINFORCING.
2. * INDICATES CONTRACTOR OPTION: CONTINUOUS HORIZONTAL BAR TERMINATING IN STD ACI HOOK IN LIEU OF SEPARATE BAR WITH TENSION LAP SPLICE.

3 / S-26 TANK DOUBLE MAT WALL REINFORCEMENT AT T-INTERESCTION
SCALE: NONE

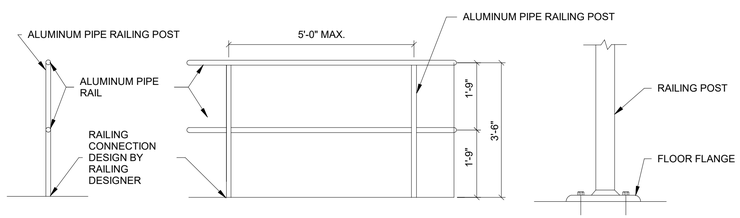

RAILING SECTION RAILING ELEVATION FLOOR FLANGE

NOTES:

1. CONTRACTOR TO PROVIDE ENGINEERED DRAWINGS AND CALCULATIONS SIGNED AND STAMPED BY USVI REGISTERED PROFESSIONAL ENGINEER PRIOR TO FABRICATION.
2. RAILING SHALL BE DESIGNED IN ACCORDANCE WITH THE CURRENT EDITION OF THE INTERNATIONAL BUILDING CODE.
3. POST SPACING SHALL BE A MAXIMUM OF 5'-0". POSTS AND RAILINGS SHALL BE A MINIMUM OF 1 1/2" SCH. 40 ALUMINUM PIPE, ALLOY 6063-T6, ASTM-B-429 OR ASTM-B-221. THE RAILING MANUFACTURER SHALL SHOW THAT THEIR POSTS ARE OF ADEQUATE STRENGTH TO MEET THE LOADING REQUIREMENTS. IF THE MANUFACTURER'S POSTS ARE NOT OF ADEQUATE STRENGTH, THE MANUFACTURER MAY REDUCE POST SPACING, OR ADD REINFORCING DOWEL, OR DO BOTH TO MEET LOADING REQUIREMENTS.
4. POSTS SHALL NOT INTERRUPT CONTINUATION OF THE TOP RAIL AT ANY POINT ALONG THE RAILING, INCLUDING CORNERS AND END TERMINATIONS (OSHA 191023). THE TOP SURFACE OF THE TOP RAILING SHALL BE SMOOTH AND UNINTERRUPTED BY PROJECTING FITTINGS.
5. FIELD WELDING OF THE RAILING IS NOT ALLOWED.

4 / S-26 RAILING DETAIL
SCALE: NONE

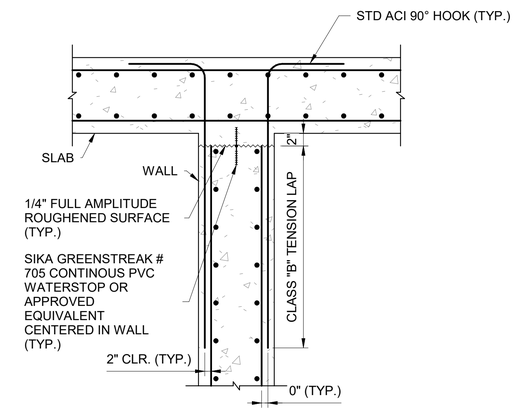

NOTES:

1. REFER TO INDIVIDUAL STRUCTURE PLANS FOR WALL THICKNESSES AND REINFORCING.

5 / S-26 TANK SLAB AT TOP LEVEL ON WALL AT T-INTERSECTION
SCALE: NONE

CONSTRUCTION DOCUMENTS

No.	REVISIONS	DATE	BY

Kimley»Horn

PROFESSIONAL ENGINEER
JON CASEY LONG
0-10005-1B
U.S. VIRGIN ISLANDS
07-13-26

KHA PROJECT 045826000
DATE JUNE, 2026
SCALE: AS SHOWN
DESIGNED BY: SES
DRAWN BY: NJD
CHECKED BY: SES

STRUCTURAL STANDARD DETAILS

LBJ SEWERSHED REHABILITATION
PREPARED FOR
VIWMA

SHEET NUMBER
S-26

Autodesk Docs://045826000 St Croix LBJ Pump Station/LBJ Sewershed - Structural Serv4
This document, together with the concepts and designs presented herein, as an instrument of service, is intended only for the specific purpose and client for which it was prepared. Reuse of and improper reliance on this document without written authorization and adaptation by Kimley-Horn and Associates, Inc. shall be without liability to Kimley-Horn and Associates, Inc.

(A)ARV	(AUTOMATIC) AIR RELEASE VALVE
A/C	AIR CONDITIONING
A/VV	AIR/VACUUM AIR VALVE
AAV	AUTOMATIC AIR VENT
AB-xx	AUGER BORING (e.g. AB-1)
ABAN	ABANDON(ED)
ABFV	ACTUATED BUTTERFLY VALVE
ABRSV	ABRASIVE
ABS	ACRYLONITRILE BUTADIENE STYRENE
ACCV	ASPHALT-COATED CORRUGATED METAL PIPE
ACP	AIR CUSHION CHECK VALVE
ADH	ADHESIVE
ADJ	ADJUSTABLE
AFF	ABOVE FINISHED FLOOR
AFG	ABOVE FINISHED GRADE
AFS	ABOVE FINISHED SLAB
AG	AMMONIA GAS
AIR	AIR PIPE
AL	ALUMINUM
ALT	ALTERNATE
AMM	AMMONIATOR
AOD	ANGLE OF DEFLECTION
APPROX	APPROXIMATE
AS	AMMONIA SOLUTION
ASSY	ASSEMBLY
B	BRINE
B-xx	BORING (e.g. B-1)
B/W	BOTH WAYS
BCV	BALL CHECK VALVE
BF	BLIND FLANGE
BFP	BACKFLOW PREVENTER
BFV	BUTTERFLY VALVE
BGO	BURIED GEAR OPERATOR
BI	BLACK IRON
BIP	BLACK IRON PIPE
BITUM	BITUMINOUS or BITUMASTIC
BLDG	BUILDING
BM	BENCH MARK
BOC	BACK OF CURB
BOS	BOTTOM OF SLAB
BOT	BOTTOM
BSP	BLACK STEEL PIPE
BTWN	BETWEEN
BV	BALL VALVE
BW	BUTT WELD
BWR	BACKWASH RETURN
BWS	BACKWASH SUPPLY
BWW	BACKWASH WASTE
C	CAUSTIC SODA
C&G	CURB & GUTTER
C.F.	CUBIC FOOT
C.I.	CUBIC INCH
C.Y.	CUBIC YARD
C/C	CENTER TO CENTER
CA	COMPRESSED AIR
CaCL2	CALCIUM CHLORIDE
CAP	CAPACITY
CATV	CABLE TELEVISION
CAV	COMBINATION AIR VALVE
CBP	CHLORINE BOOSTER PUMP
CCC	CHLORINE CONTACT CHAMBER
CE	CHLORINATED EFFLUENT
CFM	CUBIC FEET PER MINUTE
CFS	CUBIC FEET PER SECOND
CI	CAST IRON
CIN	CORROSION INHIBITOR
CIPF	CLEAN-IN-PLACE FILL
CIPS-R	CLEAN-IN-PLACE SUPPLY or RETURN
CISP	CAST IRON SOIL PIPE
CL	CENTER LINE
CL2	CHLORINE GAS
CLD	CHLORINE DIOXIDE
CLF	CHAIN LINK FENCE
CLN	CLEANING
CLR	CLEAR(ANCE)
CMP	CORRUGATED METAL PIPE
CMPA	CORRUGATED METAL PIPE ARCH
CO	CLEAN OUT
CO2	CARBON DIOXIDE
COAG	COAGULANT
CONC	CONCENTRATE
CONN	CONNECTION
CONSTR	CONSTRUCT(ION)
CONT	CONTINUATION
COP	COPPER PIPE
CP	CONCRETE PIPE
CPA	CONCRETE PIPE ARCH
CPLG	COUPLING
CPP	CONCRETE PRESSURE PIPE
CPVC	CHLORINATED POLYVINYL CHLORIDE
CS	CHLORINE SOLUTION
CV	CHECK VALVE
CW	DOMESTIC COLD WATER
CWT	CLARIFIED WATER TRANSFER
CYL	CYLINDER
D	DRAIN
DEG	DEGREE
DEMO	DEMOLITION
DF	DIESEL FUEL
DI/DIP	DUCTILE IRON (PIPE)
DIA	DIAMETER
DIAG	DIAGONAL
DIM	DIMENSION
DIR	DIRECTION
DISCH	DISCHARGE
DJ	DISMANTLING JOINT
DMH	DROP MANHOLE
DN	DOWN
DR	DIMENSION RATIO
DV	DIAPHRAGM VALVE
DW	DISINFECTED WATER
DWG	DRAWING
DWV	DRAIN, WASTE, AND VENT
E	EAST(ING)
E.F.	EACH FACE
E.W.	EACH WAY
EA	EACH
ECC	ECCENTRIC
EFF	EFFLUENT
EGO	ELEVATED GEAR OPERATOR
EJ	EXPANSION JOINT
EL(EV)	ELEVATION
ELAST	ELASTOMERIC
ELL	ELBOW
EMER	EMERGENCY
EOP	EDGE OF PAVEMENT
EPDM	ETHYLENE PROPYLENE DIENE MONOMER
EQUIP	EQUIPMENT
EST	ESTIMATE(D)
EVA	ELECTRIC VALVE ACTUATOR
EX(IST)	EXISTING
EXP	EXPANSION
EXT	EXTERIOR
F/F	FACE TO FACE
FA	FOUL AIR
FAB	FABRICATE(D)
FBW	FILTER BACKWASH
FC	FLEXIBLE COUPLING
FCA	FLANGED COUPLING ADAPTER
FCV	FLOW CONTROL VALVE
FD	FLOOR DRAIN
FE	FILTER(ED) EFFLUENT
FEED	RO FEED
FF	FINISHED FLOOR
FH	FIRE HYDRANT
FIG	FIGURE
FIN	FINISH(ED)
FL	FLUORIDE
FLEX	FLEXIBLE
FLG	FLANGE(D)
FLR	FLOOR
FM	FORCE MAIN
FO(L)(C)	FIBER OPTIC (LINE)(CONDUIT)
FP	FIRE PROTECTION
FPM	FEET PER MINUTE
FPS	FEET PER SECOND
FRP	FIBERGLASS REINFORCED PLASTIC
FT	FOOT OR FEET
FV	FOOT VALVE
FW	FINISHED WATER
G	GRIT
G.O.	GEAR OPERATED
GA	GAUGE
GAL	GALLON(S)
GALV	GALVANIZED
GBW	GAC BACKWASH
GCV	GLOBE CHECK VALVE
GE	GROOVED END
GEN	GENERATOR
GIP	GALVANIZED IRON PIPE
GJ	GROOVE JOINT
GND	GROUND
GPD	GALLONS PER DAY
GPH	GALLONS PER HOUR
GPM	GALLONS PER MINUTE
GPS	GALLONS PER SECOND
GR	GRADE
GS	GALVANIZED STEEL
GSP	GALVANIZED STEEL PIPE
GSR	GROUND STORAGE RESERVOIR
GST	GROUND STORAGE TANK
GV	GATE VALVE
HB	HOSE BIBB
HD	HEAVY DUTY
HDD	HORIZONTAL DIRECTIONAL DRILL
HDPE	HIGH-DENSITY POLYETHYLENE
HF6	HYDROGEN HEXAFLUORIDE
HFA	HYDROFLUOSILICIC ACID
HFCA	HARNESSED FLANGED COUPLING ADAPTER
HORIZ	HORIZONTAL
HP	HORSEPOWER
HPA	HIGH PRESSURE AIR
HR	HOUR
HSP	HIGH SERVICE PUMP
HT	HEIGHT
HVA	HYDRAULIC VALVE ACTUATOR
HVAC	HEATING, VENTILATION, AND AIR CONDITIONING
HW	DOMESTIC HOT WATER
HWL	HIGH WATER LEVEL
HYD	HYDRAULIC
ID	INSIDE DIAMETER
IN	INCH(ES)
INF	INFLUENT
INV	INVERT
IP	IRON PIPE
IPS	INTERNATIONAL PIPE STANDARD
IR	INTERNAL RECYCLE
IRML	INTERNAL MIXED LIQUOR RETURN
IW	IRRIGATION WATER
IX	ION EXCHANGE
JB	JUNCTION BOX
JT	JOINT
KGV	KNIFE GATE VALVE
L,LT	LEFT
LAB	LABORATORY
LAM	LAMINATE OR LAMINATION
LAT	LATERAL
LB(S)	POUND(S)
LEN	LENGTH
LF	LINEAR FEET
LHDPE	LINEAR HIGH-DENSITY POLYETHYLENE
LS	LIME SLURRY
LSS	LIME STABILIZED SLUDGE
LWL	LOW WATER LEVEL
M	MECHANICAL JOINT
MAINT	MAINTAIN OR MAINTENANCE
MAN	MANUAL(LY)
MAX	MAXIMUM
MCC	MOTOR CONTROL CENTER
ME(S)	MITERED END (SECTION)
MECH	MECHANICAL
MF	MICROFILTRATION
MFR	MANUFACTURE(R)
MG	MILLION GALLONS
MGD	MILLION GALLONS PER DAY
MH	MANHOLE
MI	MILE(S)
MIN	MINIMUM
MISC	MISCELLANEOUS
ML	MIXED LIQUOR
MPH	MILES PER HOUR
MRPP	METAL REINFORCED PLASTIC PIPE
MTD	MOUNTED
MV	MOTORIZED VALVE
MW	MANWAY
MWL	MEAN WATER LEVEL
N	NORTH(ING)
N.C.	NORMALLY CLOSED
N.O.	NORMALLY OPEN
N/A	NOT APPLICABLE
NaOCl	SODIUM HYPOCHLORITE
NaOH	SODIUM HYDROXIDE
NE	NORTHEAST
NF	NANOFILTRATION
NIC, N.I.C.	NOT IN CONTRACT
NO., #	NUMBER
NOM	NOMINAL
NPT	NATIONAL PIPE TAPER
NPW	NON-POTABLE WATER
NSFC	NOT SHOWN FOR CLARITY
NTS,N.T.S.	NOT TO SCALE
NW	NORTHWEST
O2	OXYGEN
O&M	OPERATION AND MAINTENANCE
O.C.	ON CENTERS
O.C.E.W.	ON CENTERS EACH WAY
O/E	OR EQUAL
O/O	OUTSIDE TO OUTSIDE
OD	OUTSIDE DIAMETER
OF	OUTSIDE FACE
OFF	OFFSET
OH	OVERHEAD
OP	ORIFICE PLATE
OPER	OPERATOR
OPP	OPPOSITE
OPT	OPTION(AL)
OS&Y	OUTSIDE STEM & YOKE
OVF	OVERFLOW
P/L	PROPERTY LINE
PA	PROCESS AIR
PBV	PLASTIC BALL VALVE
PC	POINT OF CURVE
PE	PLAIN END (PIPE)
PE	PRIMARY EFFLUENT (SYSTEM)
PEP	POLYETHYLENE PIPE
PERM	PERMEATE
PG	PRESSURE GAUGE
PGL	PROPOSED GRADE LINE
PJ	PUSH-ON JOINT
PLC	PROGRAMMABLE LOGIC CONTROLLER
PM	PROCESS MECHANICAL
PNV	PINCH VALVE
POB	POINT OF BEGINNING
POI	POINT OF INTERSECTION
POJ	PUSH-ON JOINT
POL	POLYMER
POT	POINT OF TANGENCY
PPD	POUNDS PER DAY
PPM	PARTS PER MILLION
PREFAB	PREFABRICATED
PRES	PRESSURE
PROP	PROPOSED
PRV	PRESSURE REDUCING VALVE
PRW	PROCESS WATER
PS	PRIMARY SLUDGE
PSF	POUNDS PER SQUARE FOOT
PSI	POUNDS PER SQUARE INCH
PV	PLUG VALVE
PVC	POLYVINYL CHLORIDE
PVC-D	POLYVINYL CHLORIDE (DOUBLE CONTAINED)
PVDF	POLYVINYLIDENE FLUORIDE (KYNAR)
PVMT	PAVEMENT
PW	POTABLE WATER
Q	FLOW
QTY	QUANTITY
R,RT	RIGHT
R/W, R.O.W.	RIGHT OF WAY
RAD., R.	RADIUS
RAS	RETURN ACTIVATED SLUDGE
RAW	RAW WATER
RCB	REINFORCED CONCRETE BOX
RCP	REINFORCED CONCRETE PIPE
RCPA	REINFORCED CONCRETE PIPE ARCH
RCW,RW	RECLAIMED WATER
REBAR	REINFORCING STEEL
REC	RECIRCULATION (DISCHARGE/SUCTION)
RED	REDUCER
REEW	REUSE EFFLUENT WATER
REF	REFERENCE
REINF	REINFORCE(D)(ING)(MENT)
REJ	RO REJECT, REJECT
REQ'D	REQUIRED
REW	RETURN EFFLUENT WATER
RJ	RESTRAINED JOINT (BELL)
RMJ	RESTRAINED MECHANICAL JOINT
RNG	RANGE
RO	REVERSE OSMOSIS
ROC	RADIUS OF CURVATURE
RPM	REVOLUTIONS PER MINUTE
RPZBP	REDUCED PRESSURE ZONE BACKFLOW PREVENTER
RR	RAILROAD
RS	RAW SEWAGE
RWW	RAW WASTEWATER
S	SOUTH
S.F.	SQUARE FOOT
S.I.	SQUARE INCH
S.O.	SIDE OPERATED
S.STL	STAINLESS STEEL
S.Y.	SQUARE YARD
SA	SULFURIC ACID
SAMP	SAMPLE LINE
SAN	SANITARY SEWER
SB-xx	SOIL BORING (e.g., SB-1)
SC	SCUM
SCH	SCHEDULE
SCRE	SCREENED EFFLUENT
SCV	SILENT CHECK VALVE
SD	STORM DRAIN
SDR	STANDARD DIMENSION RATIO
SE	SOUTHEAST
SE	SECONDARY EFFLUENT
SEC	SECTION
SF	SQUARE FOOT or FEET
SHT	SHEET(ED)(ING)
SI	SCALE INHIBITOR
SIM	SIMILAR
SL	SLUDGE
SLV	SLEEVE
SM	SHEET METAL
SOL	SOLUTION
SP	SOIL PIPE
SPEC(S)	SPECIFICATION(S)
SPT-xx	STANDARD PENETRATION TEST BORING (e.g. SPT-1)
SQ	SQUARE
SS	SANITARY SEWER
SSE	SUBSTANDARD EFFLUENT
ST	SAMPLE TAP
STA	STATION
STD	STANDARD
STL	STEEL
STORM	STORMWATER
STR	STRAIGHT
SUP	SUPERNATANT
SV	SOLENOID VALVE
SVC	SERVICE
SVW	SERVICE WATER
SW	SOUTHWEST
SWD	SIDEWATER DEPTH
SYM	SYMBOL
SYMM	SYMMETRICAL
T&B	TOP AND BOTTOM
T.O.C.	TOP OF CONCRETE
T.O.S.	TOP OF SLAB
T.S.	TAPPING SLEEVE
T.V.	TAPPING VALVE
T/B	TOP OF BANK
T/C	TOP OF CURB
T/S	TOE OF SLOPE
TAN	TANGENT
TB-xx	TEST BORING-xx (e.g. TB-1)
TBM	TEMPORARY BENCHMARK
TDH	TOTAL DYNAMIC HEAD
TEL	TELEPHONE
TEMP	TEMPORARY
TH	TEST HOLE
THD	THREAD(ED)
THK	THICK(NESS)
TJ	TIED JOINT
TS	THICKENED SLUDGE
TV	TELEVISION
TWAS	THICKENED WASTE ACTIVATED SLUDGE
TWP	TOWNSHIP
TYP	TYPICAL
UD	UNDERDRAIN
UF	ULTRAFILTRATION
UG	UNDERGROUND
UGE	UNDERGROUND ELECTRIC
UON	UNLESS OTHERWISE NOTED
UTC	UNDERGROUND TELEPHONE CABLE
UTIL	UTILITY
UV	ULTRAVIOLET
V	VENT
VAC	VACUUM
VAR	VARIES
VB	VALVE BOX
VC	VERTICAL CURVE
VCP	VITRIFIED CLAY PIPE
VEL	VELOCITY
VENT	VENT
VERT	VERTICAL
VFD	VARIABLE FREQUENCY DRIVE
VOL	VOLUME
VTR	VENT THROUGH ROOF
W	WEST
W.L.	WATER LEVEL
W.P.	WALL PIPE (WITH WATERSTOP)
W/	WITH
W/O	WITHOUT
WAS	WASTE ACTIVATED SLUDGE
WCO	WALL CLEANOUT
WF	WIDE FLANGE
WH	WALL HYDRANT
WM	WATER MAIN
WPR	WORKING PRESSURE
WS(P)	WELDED STEEL (PIPE)
WT	WEIGHT
WTF	WATER TREATMENT FACILITY
WTP	WATER TREATMENT PLANT
WW	WASTEWATER
WWF	WELDED WIRE FABRIC
WWM	WELDED WIRE MESH
WWTF	WASTEWATER TREATMENT FACILITY
WWTP	WASTEWATER TREATMENT PLANT
XFER	TRANSFER
XLHDPE	CROSS LINKED HIGH-DENSITY POLYETHYLENE
YD	YARD(S)
YH	YARD HYDRANT
YR	YEAR(S)

STANDARD ABBREVIATIONS

NOTE:
THIS LEGEND IS FOR GENERAL REFERENCE. NOT ALL ABBREVIATIONS, SYMBOLS, PROCESSES, MATERIALS, OR FITTINGS MAY BE USED IN THIS DESIGN, NOR IS THIS LEGEND COMPREHENSIVE. REFER TO INDIVIDUAL DRAWING LEGEND(S) IF SYMBOLS ARE NOT LISTED. INDIVIDUAL DISCIPLINE STANDARD LEGENDS SUPERCEDE THIS GENERAL LEGEND, IF PROVIDED.

NOTES:

1. CONTRACTOR SHALL RETAIN THE SERVICES OF THE SYSTEM SUPPLIER TO PROVIDE OPERATION AND MAINTENANCE TRAINING FOR ALL SYSTEM EQUIPMENT AS SPECIFIED HEREIN
2. FOR EQUIPMENT ITEMS NOT MANUFACTURED BY THE SYSTEM SUPPLIER, HE SHALL PROVIDE ON SITE TRAINING BY AN AUTHORIZED REPRESENTATIVE OF THE EQUIPMENT MANUFACTURER AS PART OF HIS SERVICES. THE MANUFACTURER'S REPRESENTATIVE SHALL BE FULLY KNOWLEDGEABLE IN THE OPERATION AND MAINTENANCE OF THE EQUIPMENT
3. CONTRACTOR SHALL BE RESPONSIBLE FOR ALL COSTS ASSOCIATED WITH TRAINING AND SHALL PROVIDE ALL REQUIRED MATERIALS, TEXTS, AND REQUIRED SUPPLIES
4. CONTRACTOR SHALL INSPECT AND ADJUST EQUIPMENT AFTER INSTALLATION AND ENSURE PROPER OPERATION
5. CONTRACTOR SHALL TEST AND OPERATE THE PRODUCTS IN PRESENCE OF THE ENGINEER AND VERIFY THAT EQUIPMENT CONFORMS TO CONTRACT DOCUMENTS
6. CONTRACTOR TO PROVIDE ON SITE OPERATION AND MAINTENANCE TRAINING BY SYSTEM SUPPLIER AND THE EQUIPMENT MANUFACTURER REPRESENTATIVE PRIOR TO PLACING THE EQUIPMENT IN CONTINUOUS OPERATION
7. TRAINING SHALL ACCOMPLISH THE FOLLOWING:
   A. PROVIDE INSTRUCTION CONVERING USE AND OPERATION OF THE EQUPMENT TO PERFORM THE INTENDED FUNCTIONS
   B. PROVIDE INSTRUCTION COVERING PROCEDURES FOR ROUTINE, PREVENTIVE, AND TROUBLESHOOTING MAINTENANCE, INCLUDING EQUIPMENT CALIBRATION
   C. EXPLAIN PROCEDURES FOR PLACING THE EQUIPMENT IN AND OUT OF OPERATION AND EXPLAIN NECESSARY ACTIONS AND PRECAUTIONS TO BE TAKEN
   D. PROVIDE FIELD TRAINING AS TO HOW TO CHANGE PROCESS CONTROL AND ALARM SET POINTS IN ALL MICROPROCESSOR-BASED CONTROLLERS AND TRANSMITTERS. MAINTENANCE PERSONNEL SHALL BE TRAINED TO ENTER PASSWORDS, PROGRAMMING, OR CONFIGURATION DATA, ETC.

PROCESS PIPING LEGEND (DOUBLE-LINE OR 3D)

- MECHANICAL JOINT FITTINGS
- FLANGED FITTINGS
- SOLVENT WELD FITTINGS
- BUTT-WELD FITTINGS (S.STL SHOWN)
- BALL VALVE (SOLVENT WELD SHOWN)
- GATE VALVE (FLANGED SHOWN)
- PLUG VALVE (FLANGED SHOWN)
- BUTTERFLY VALVE (FLANGED SHOWN, WHEEL OPERATED)
- BUTTERFLY VALVE (WAFER, LEVER OPERATED)
- GLOBE CHECK VALVE (FLANGED SHOWN)
- SWING CHECK VALVE (FLANGED SHOWN)
- PIPE COUPLING
- EXPANSION JOINT (FLANGED SHOWN)
- FLOW CONTROL VALVE (FLANGED SHOWN)
- MAGNETIC FLOW METER
- PROPELLER FLOW METER
- V-CONE FLOW METER
- VENTURI FLOW METER

SOLID LINE PIPING INDICATES ABOVE GRADE PIPING UNLESS OTHERWISE NOTED

DASHED LINE PIPING INDICATES BELOW GRADE PIPING UNLESS OTHERWISE NOTED

CONSTRUCTION DOCUMENTS

No.	REVISIONS	DATE	BY

Kimley»Horn

PROFESSIONAL ENGINEER
KELLY B. SMITH, P.E.
0-64744-1B
U.S. VIRGIN ISLANDS

KHA PROJECT 045826000	
DATE JUNE 2026	
SCALE: AS SHOWN	
DESIGNED BY:	KBS
DRAWN BY:	RLL
CHECKED BY:	MTS

MECHANICAL LEGEND AND ABBREVIATIONS

LBJ SEWERSHED REHABILITATION
PREPARED FOR
VIWMA

SHEET NUMBER
M-01

Autodesk Docs://045826000 St Croix LBJ Pump Station/LBJ Triplex (Submersible at Grade) R2026.rvt

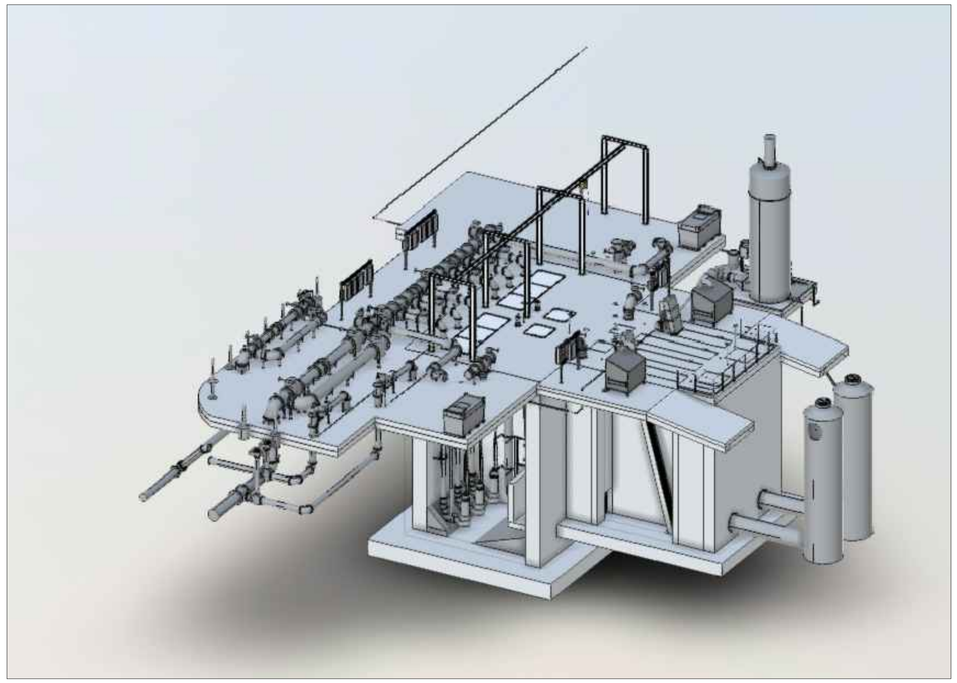

PUMP STATION ISOMETRIC
N.T.S.

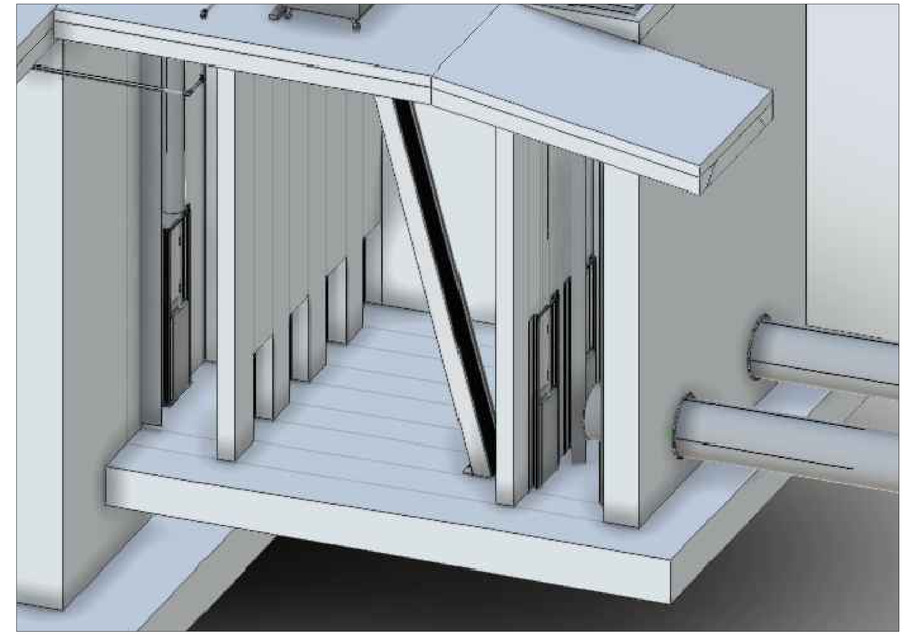

WETWELL ISOMETRIC
N.T.S.

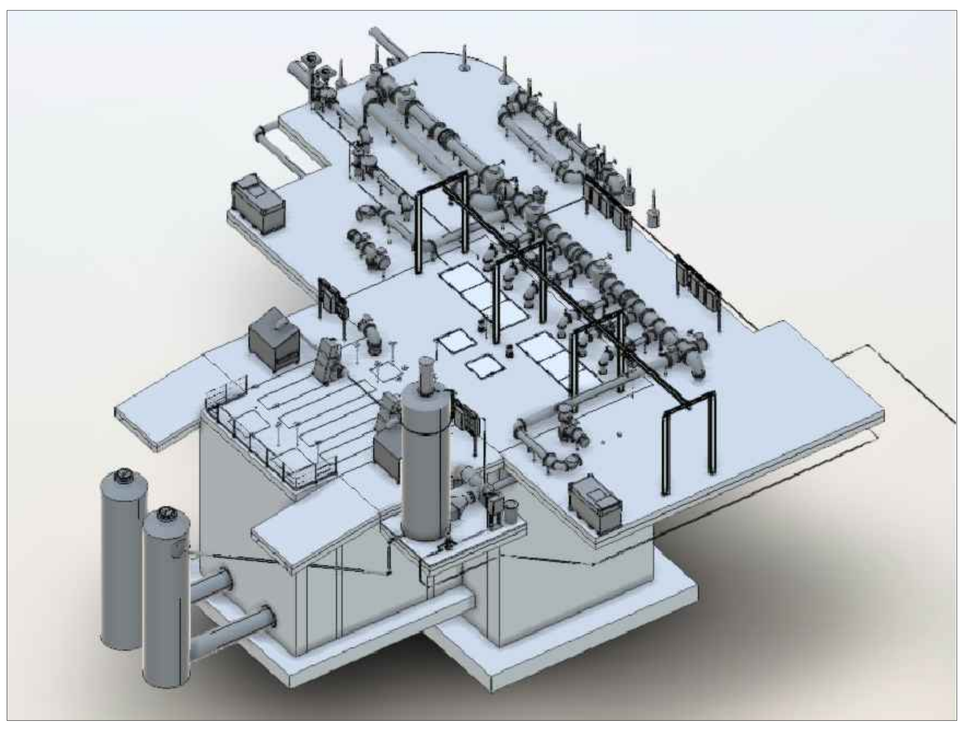

PUMP STATION ISOMETRIC
N.T.S.

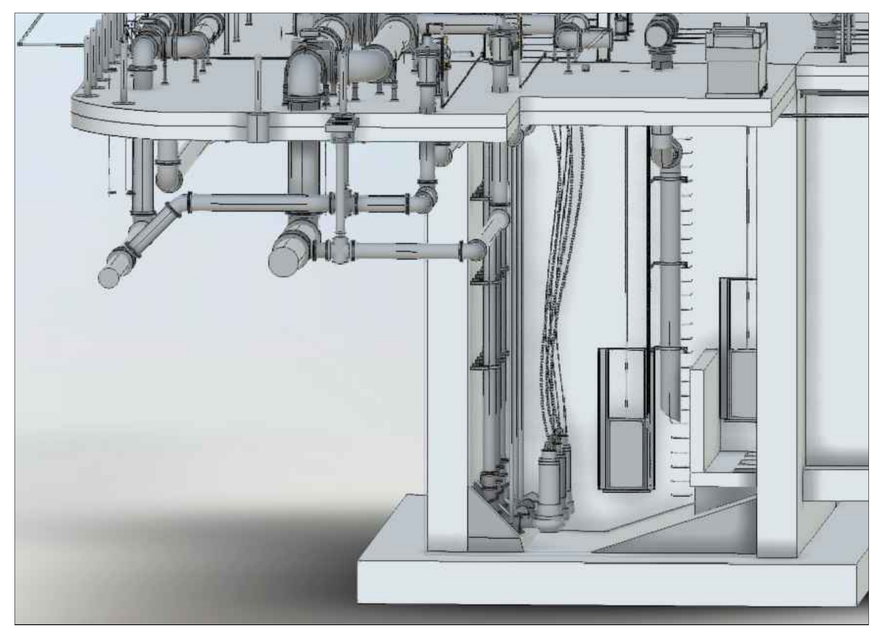

INFLUENT CHANNEL ISOMETRIC
N.T.S.

CONSTRUCTION DOCUMENTS

No.	REVISIONS	DATE	BY

Kimley»Horn
Sign of Quality

PROFESSIONAL ENGINEER
KELLY B. SMITH, P.E.
0-64744-1B
U.S. VIRGIN ISLANDS

KHA PROJECT 045826000
DATE JUNE 2026
SCALE AS SHOWN
DESIGNED BY KBS
DRAWN BY MC
CHECKED BY MTS

PUMP STATION ISOMETRIC

LBJ PUMP STATION
PREPARED FOR
VIWMA

SHEET NUMBER
M-02

Plotted By:Chaturvedi, Manas Sheet Set:FEC Layout:M-02 PUMP STATION ISOMETRIC June 29, 2026 01:16:37pm K:\JAX_WaterResources\045826000 - VIWMA LBJ Sewershed\CAD\PlanSheets\M-02 PUMP STATION ISOMETRIC.dwg
This document, together with the concepts and designs presented herein, as an instrument of service, is intended only for the specific purpose and client for which it was prepared. Reuse of and improper reliance on this document without written authorization and adaptation by Kimley-Horn and Associates, Inc. shall be without liability to Kimley-Horn and Associates, Inc.

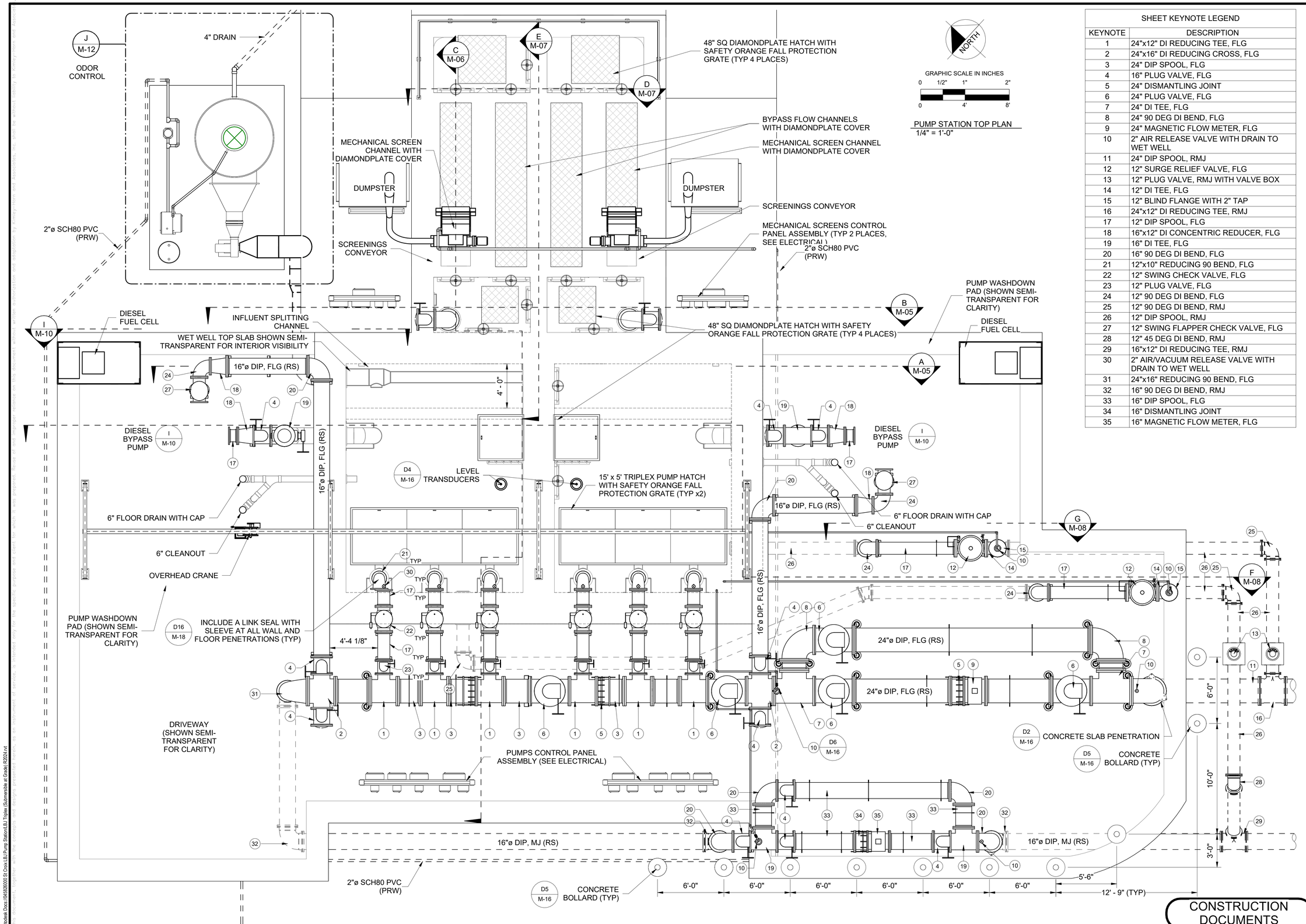

CONSTRUCTION DOCUMENTS

SHEET KEYNOTE LEGEND	
KEYNOTE	DESCRIPTION
1	24"x12" DI REDUCING TEE, FLG
2	24"x16" DI REDUCING CROSS, FLG
3	24" DIP SPOOL, FLG
4	16" PLUG VALVE, FLG
5	24" DISMANTLING JOINT
6	24" PLUG VALVE, FLG
7	24" DI TEE, FLG
8	24" 90 DEG DI BEND, FLG
9	24" MAGNETIC FLOW METER, FLG
10	2" AIR RELEASE VALVE WITH DRAIN TO WET WELL
11	24" DIP SPOOL, RMJ
12	12" SURGE RELIEF VALVE, FLG
13	12" PLUG VALVE, RMJ WITH VALVE BOX
14	12" DI TEE, FLG
15	12" BLIND FLANGE WITH 2" TAP
16	24"x12" DI REDUCING TEE, RMJ
17	12" DIP SPOOL, FLG
18	16"x12" DI CONCENTRIC REDUCER, FLG
19	16" DI TEE, FLG
20	16" 90 DEG DI BEND, FLG
21	12"x10" REDUCING 90 BEND, FLG
22	12" SWING CHECK VALVE, FLG
23	12" PLUG VALVE, FLG
24	12" 90 DEG DI BEND, FLG
25	12" 90 DEG DI BEND, RMJ
26	12" DIP SPOOL, RMJ
27	12" SWING FLAPPER CHECK VALVE, FLG
28	12" 45 DEG DI BEND, RMJ
29	16"x12" DI REDUCING TEE, RMJ
30	2" AIR/VACUUM RELEASE VALVE WITH DRAIN TO WET WELL
31	24"x16" REDUCING 90 BEND, FLG
32	16" 90 DEG DI BEND, RMJ
33	16" DIP SPOOL, FLG
34	16" DISMANTLING JOINT
35	16" MAGNETIC FLOW METER, FLG

No.	REVISIONS	DATE	BY

Kimley»Horn

PROFESSIONAL ENGINEER
KELLY B. SMITH, P.E.
0-64744-1B
U.S. VIRGIN ISLANDS

KHA PROJECT 045826000
DATE JUNE 2026
SCALE: AS SHOWN
DESIGNED BY: KBS
DRAWN BY: RLL
CHECKED BY: MTS

PUMP STATION UPPER PLAN

LBJ SEWERSHED REHABILITATION
PREPARED FOR
VIWMA

SHEET NUMBER
M-03

Autodesk Docs://045826000 St Croix LBJ Pump Station/LBJ Triplex (Submersible at Grade) R2024.rvt
This document, together with the concepts and designs presented herein, as an instrument of service, is intended only for the specific purpose and client for which it was prepared. Reuse of and improper reliance on this document without written authorization and adaptation by Kimley-Horn and Associates, Inc. shall be without liability to Kimley-Horn and Associates, Inc.

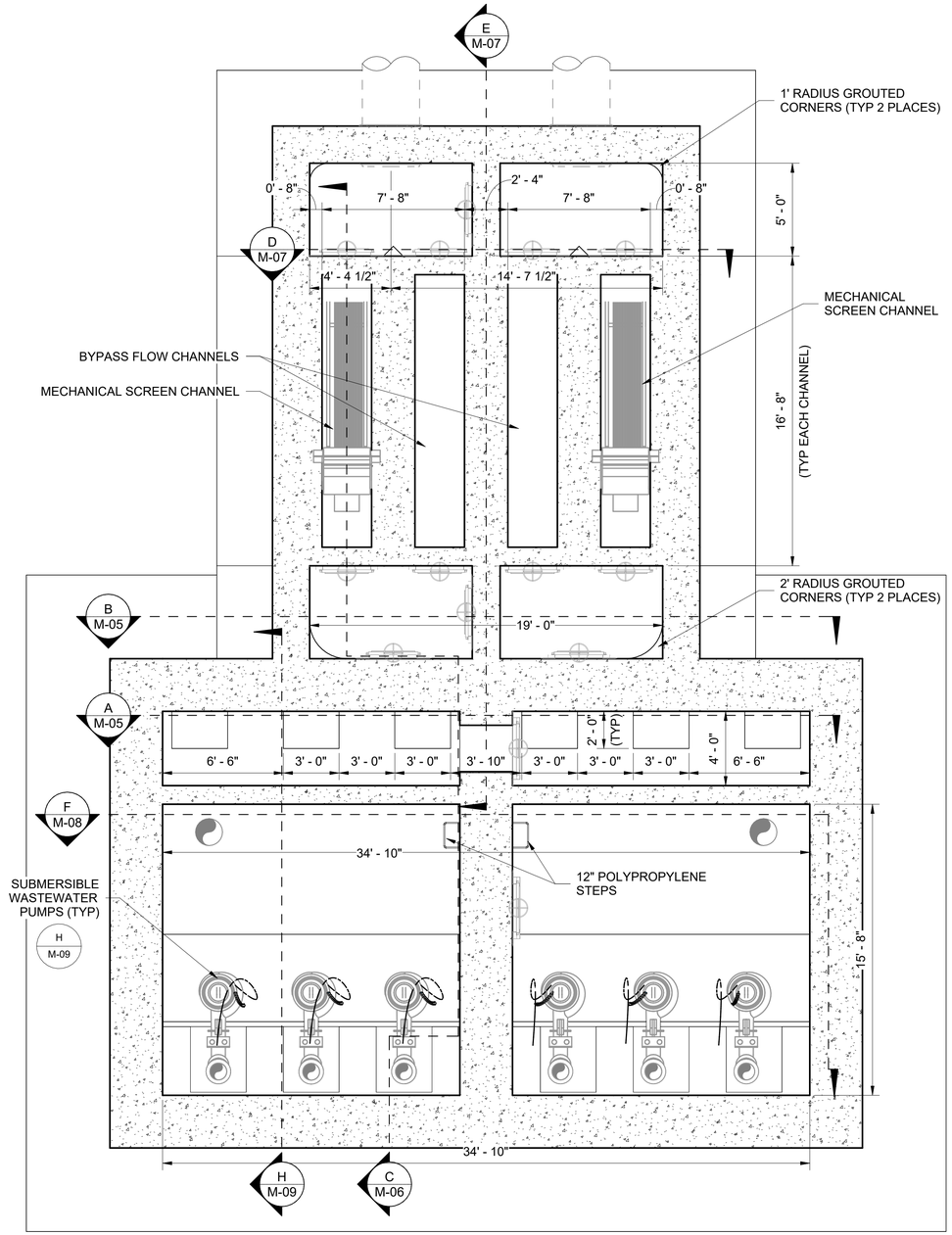

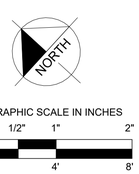

PUMP STATION LOWER PLAN
1/4" = 1'-0"

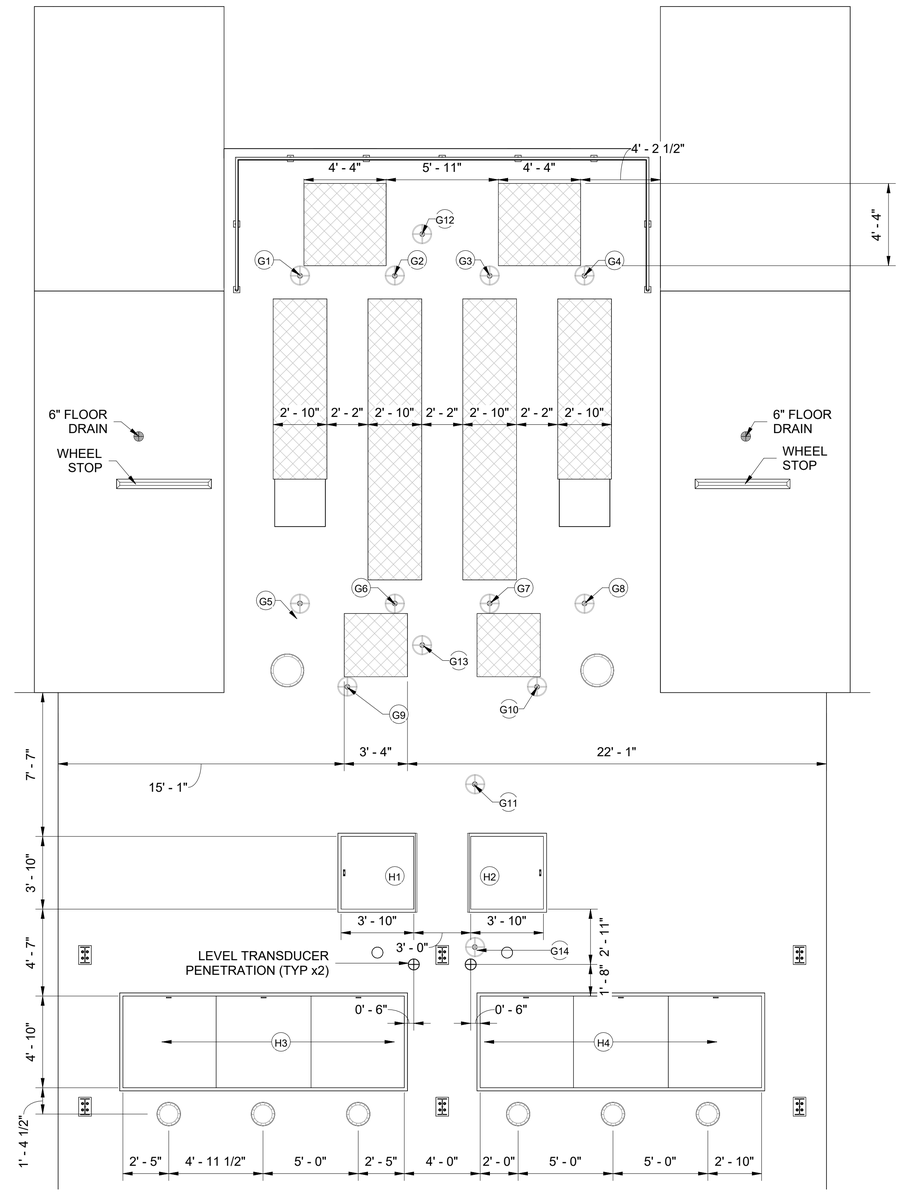

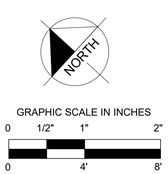

PUMP STATION SLAB PLAN
1/4" = 1'-0"

GATE AND HATCH SCHEDULE		
	DESCRIPTION	SIZE
G1	CHANNEL INFLUENT	32" x 5'-0"
G2	CHANNEL INFLUENT	32" x 5'-0"
G3	CHANNEL INFLUENT	32" x 5'-0"
G4	CHANNEL INFLUENT	32" x 5'-0"
G5	CHANNEL EFFLUENT	32" x 5'-0"
G6	CHANNEL EFFLUENT	32" x 5'-0"
G7	CHANNEL EFFLUENT	32" x 5'-0"
G8	CHANNEL EFFLUENT	32" x 5'-0"
G9	SPLITTER BOX OUTLET	32" x 5'-0"
G10	SPLITTER BOX OUTLET	32" x 5'-0"

GATE AND HATCH SCHEDULE		
	DESCRIPTION	SIZE
G11	FLOW SPLITTER	32" x 5'-0"
G12	CHANNEL INFLUENT ISOLATION	32" x 5'-0"
G13	SPLITTER BOX INTERCONNECT	32" x 5'-0"
G14	WET WELL INTERCONNECT	32" x 5'-0"
H1	WET WELL ACCESS	48" x 48"
H2	WET WELL ACCESS	48" x 48"
H3	PUMP ACCESS HATCH	5' x 5' TRIPLE LEAF (15'-0" x 5')
H4	PUMP ACCESS HATCH	5' x 5' TRIPLE LEAF (15'-0" x 5')

CONSTRUCTION DOCUMENTS

No.	REVISIONS	DATE	BY

Kimley»Horn

PROFESSIONAL ENGINEER
KELLY B. SMITH, P.E.
0-64744-1B
U.S. VIRGIN ISLANDS

KHA PROJECT 045826000
DATE JUNE 2026
SCALE: AS SHOWN
DESIGNED BY: KBS
DRAWN BY: RLL
CHECKED BY: MTS

PUMP STATION DETAILS

LBJ SEWERSHED REHABILITATION
PREPARED FOR
VIWMA

SHEET NUMBER
M-04

Autodesk Docs://045826000 St Croix LBJ Pump Station/LBJ Triplex (Submersible at Grade) R2024.rvt
This document, together with the concepts and designs presented herein, as an instrument of service, is intended only for the specific purpose and client for which it was prepared. Reuse of and improper reliance on this document without written authorization and adaptation by Kimley-Horn and Associates, Inc. shall be without liability to Kimley-Horn and Associates, Inc.

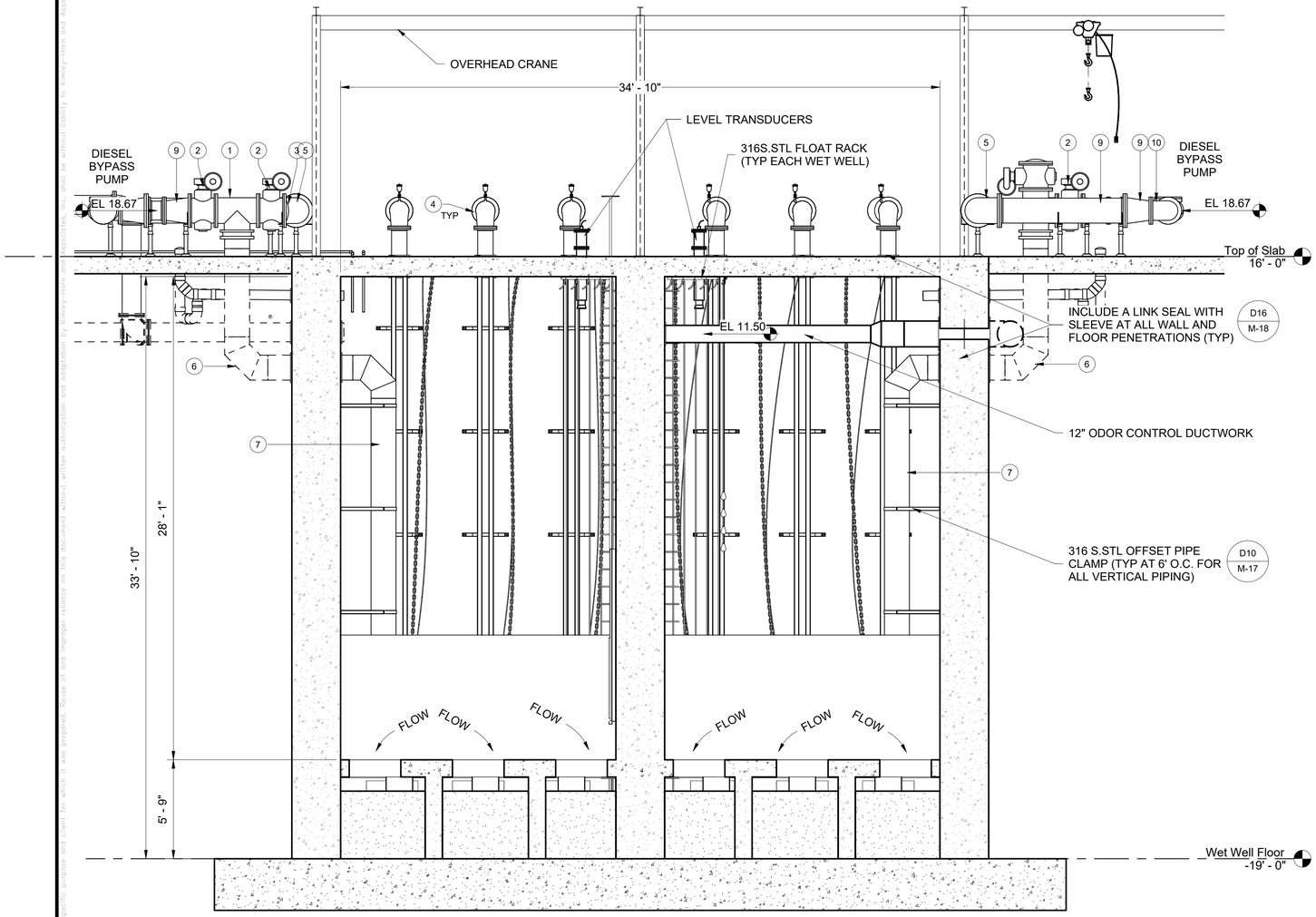

A
M-03
WET WELL INFLUENT FLOW CHANNEL
1/4" = 1'-0"

GRAPHIC SCALE IN INCHES
0 1/2" 1" 2"
0 4' 8'

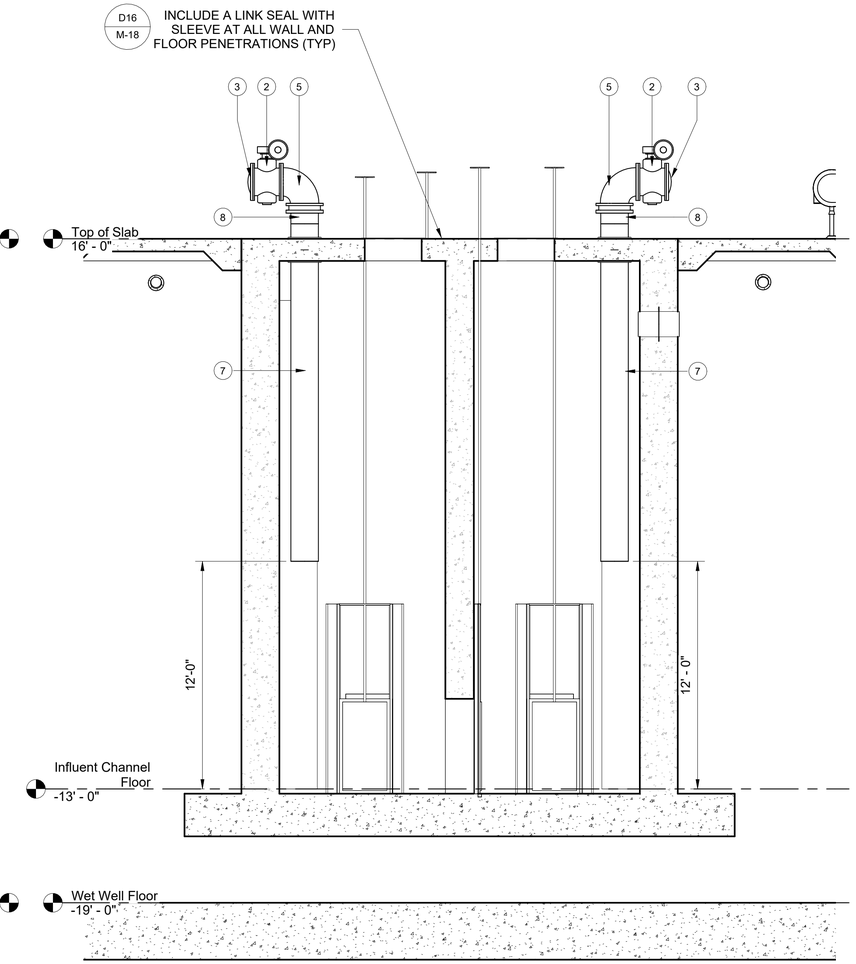

B
M-03
SCREEN EFFLUENT CHANNEL
1/4" = 1'-0"

GRAPHIC SCALE IN INCHES
0 1/2" 1" 2"
0 4' 8'

NOTES:

1. STRUCTURES TO BE LINED WITH SEWPERCOAT (REFERENCE SPECIFICATION SECTION 09 96 00)

SHEET KEYNOTE LEGEND

KEYNOTE	DESCRIPTION
1	16" DI TEE, FLG
2	16" PLUG VALVE, FLG
3	16" BLIND FLANGE
4	12"x10" REDUCING 90 BEND, FLG
5	16" 90 DEG DI BEND, FLG
6	16" HDPE 90 DEG BEND
7	16" HDPE SPOOL, DR11
8	16" HDPE FLANGE ADAPTER WITH BACKING RING
9	16"x12" DI CONCENTRIC REDUCER, FLG
10	12" 90 DEG DI BEND, FLG

CONSTRUCTION DOCUMENTS

No.	REVISIONS	DATE	BY

Kimley»Horn

PROFESSIONAL ENGINEER
KELLY B. SMITH, P.E.
0-64744-1B
U.S. VIRGIN ISLANDS

KHA PROJECT 045826000
DATE JUNE 2026
SCALE: AS SHOWN
DESIGNED BY: KBS
DRAWN BY: RLL
CHECKED BY: MTS

INFLUENT CHANNEL SECTIONS

LBJ SEWERSHED REHABILITATION
PREPARED FOR
VIWMA

SHEET NUMBER
M-05

Autodesk Docs://045826000 St Croix LBJ Pump Station/LBJ Triplex (Submersible at Grade) R2024.rvt
This document, together with the concepts and designs presented herein, as an instrument of service, is intended only for the specific purpose and client for which it was prepared. Reuse of and improper reliance on this document without written authorization and adaptation by Kimley-Horn and Associates, Inc. shall be without liability to Kimley-Horn and Associates, Inc.

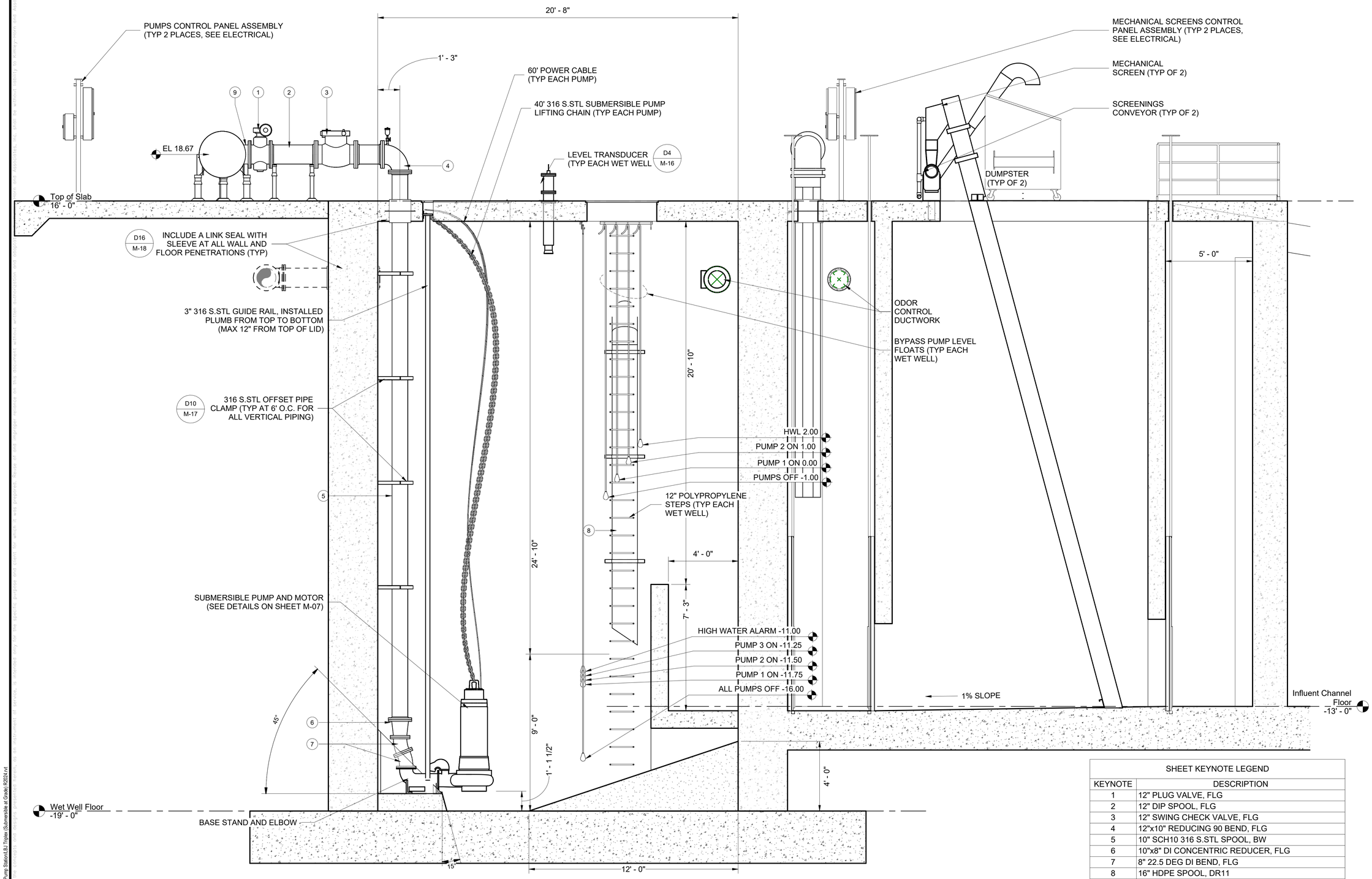

SHEET KEYNOTE LEGEND	
KEYNOTE	DESCRIPTION
1	12" PLUG VALVE, FLG
2	12" DIP SPOOL, FLG
3	12" SWING CHECK VALVE, FLG
4	12"x10" REDUCING 90 BEND, FLG
5	10" SCH10 316 S.STL SPOOL, BW
6	10"x8" DI CONCENTRIC REDUCER, FLG
7	8" 22.5 DEG DI BEND, FLG
8	16" HDPE SPOOL, DR11
9	24"x12" DI REDUCING TEE, FLG

C / M-03 TYPICAL FLOW CHANNEL SECTION
3/8" = 1'-0"

GRAPHIC SCALE IN INCHES
0 2' 4'
0 3/4" 1-1/2"

NOTES:

1. STRUCTURES TO BE LINED WITH SEWPERCOAT (REFERENCE SPECIFICATION SECTION 09 96 00)

CONSTRUCTION DOCUMENTS

No.	REVISIONS	DATE	BY

Kimley»Horn

PROFESSIONAL ENGINEER
KELLY B. SMITH, P.E.
0-64744-1B
U.S. VIRGIN ISLANDS

KHA PROJECT 045826000
DATE JUNE 2026
SCALE: AS SHOWN
DESIGNED BY: KBS
DRAWN BY: RLL
CHECKED BY: MTS

WET WELL AND FLOW CHANNEL SECTION

LBJ SEWERSHED REHABILITATION
PREPARED FOR
VIWMA

SHEET NUMBER
M-06

Autodesk Docs://045826000 St Croix LBJ Pump Station/LBJ Triplex (Submersible at Grade) R2024.rvt
This document, together with the concepts and designs presented herein, as an instrument of service, is intended only for the specific purpose and client for which it was prepared. Reuse of and improper reliance on this document without written authorization and adaptation by Kimley-Horn and Associates, Inc. shall be without liability to Kimley-Horn and Associates, Inc.

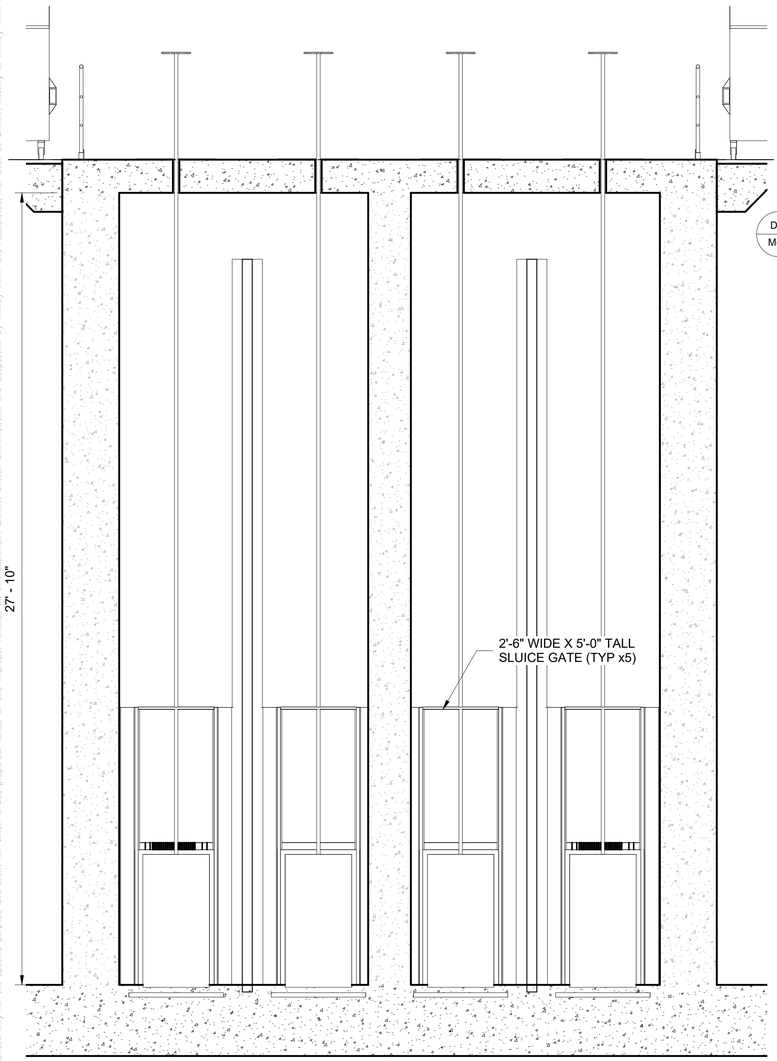

D
M-03
SCREEN INFLUENT CHANNEL
3/8" = 1'-0"

GRAPHIC SCALE IN INCHES
0 2' 4'
0 3/4" 1-1/2"

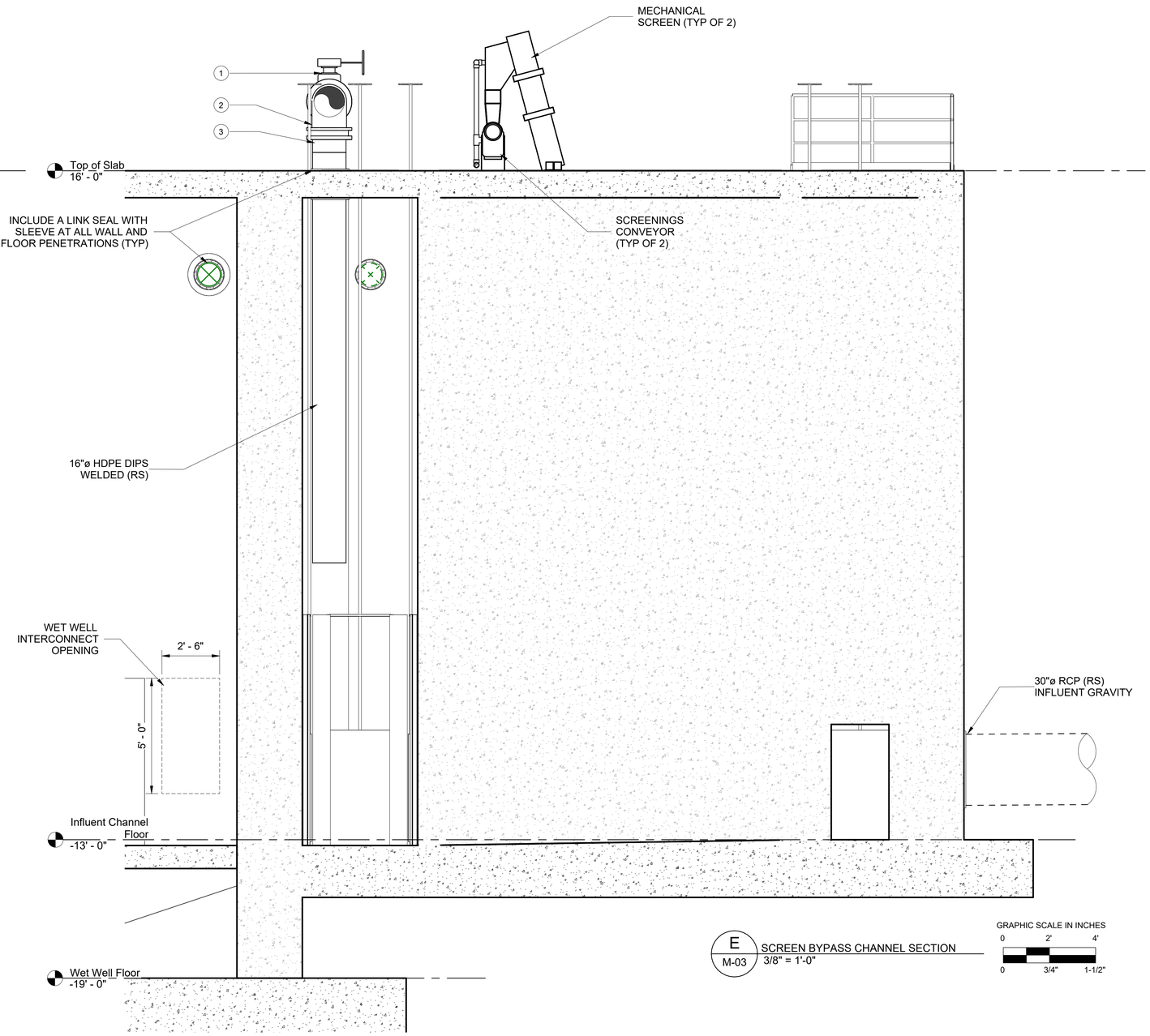

E
M-03
SCREEN BYPASS CHANNEL SECTION
3/8" = 1'-0"

GRAPHIC SCALE IN INCHES
0 2' 4'
0 3/4" 1-1/2"

SHEET KEYNOTE LEGEND	
KEYNOTE	DESCRIPTION
1	16" PLUG VALVE, FLG
2	16" DI TEE, FLG
3	16" HDPE FLANGE ADAPTER WITH BACKING RING

NOTES:

1. STRUCTURES TO BE LINED WITH SEWPERCOAT (REFERENCE SPECIFICATION SECTION 09 96 00)

CONSTRUCTION DOCUMENTS

No.	REVISIONS	DATE	BY

Kimley»Horn

PROFESSIONAL ENGINEER
KELLY B. SMITH, P.E.
0-64744-1B
U.S. VIRGIN ISLANDS

KHA PROJECT 045826000	
DATE JUNE 2026	
SCALE: AS SHOWN	
DESIGNED BY:	KBS
DRAWN BY:	RLL
CHECKED BY:	MTS

PUMP STATION SECTIONS

LBJ SEWERSHED REHABILITATION
PREPARED FOR
VIWMA

SHEET NUMBER
M-07

Autodesk Docs://045826000 St Croix LBJ Pump Stations LBJ Triplex (Submersible at Grade) R2022.rvt
This document, together with the concepts and designs presented herein, as an instrument of service, is intended only for the specific purpose and client for which it was prepared. Reuse of and improper reliance upon this document without written authorization and adaptation by Kimley-Horn and Associates, Inc. shall be without liability to Kimley-Horn and Associates, Inc.

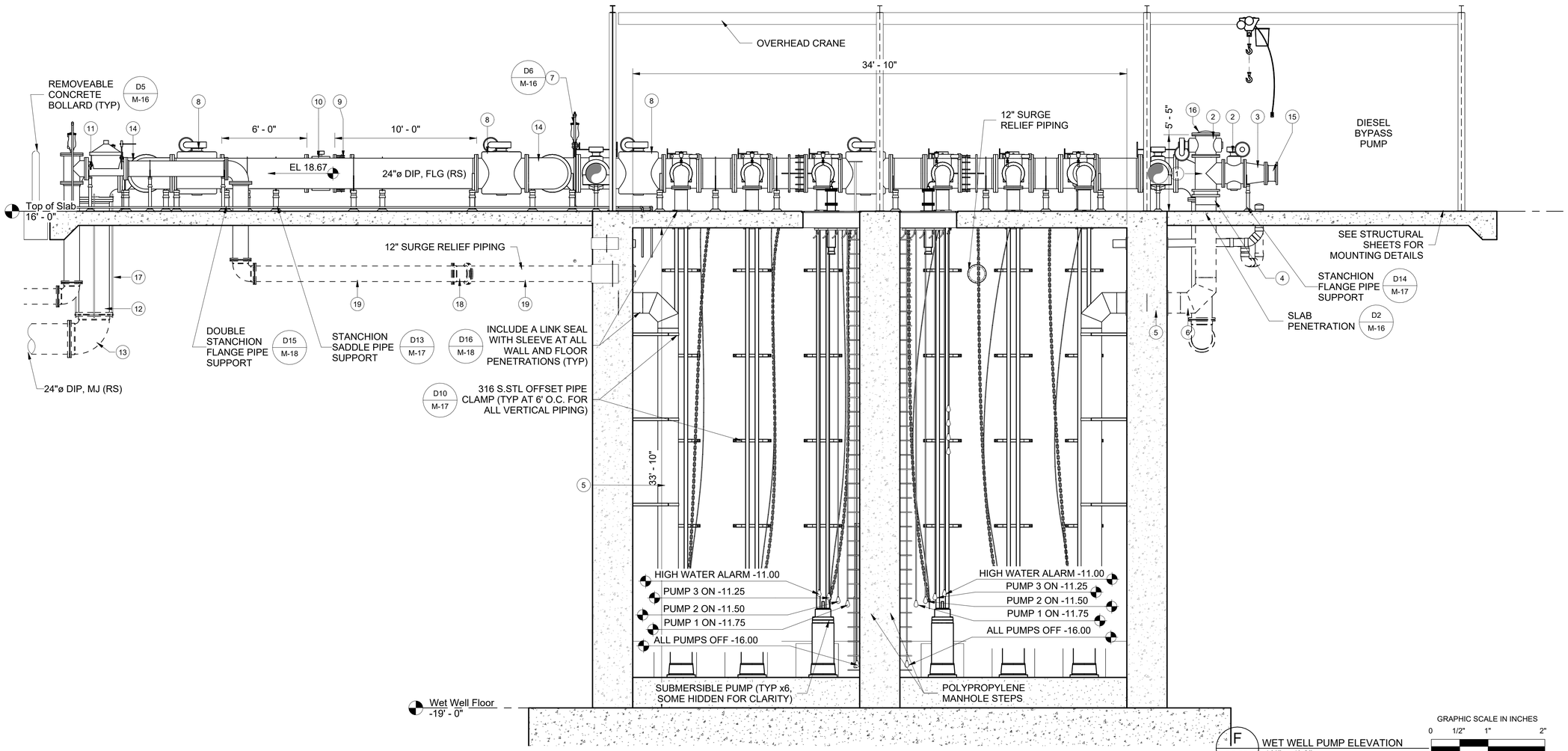

F / M-03 WET WELL PUMP ELEVATION
1/4" = 1'-0"

GRAPHIC SCALE IN INCHES
0 1/2" 1" 2"
0 4' 8'

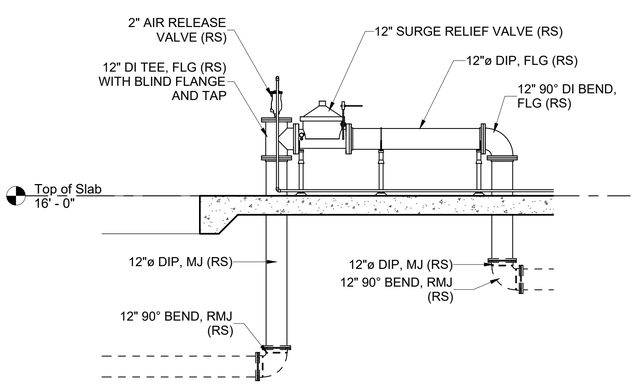

G / M-03 SURGE RELIEF VALVE SECTION
1/4" = 1'-0"

GRAPHIC SCALE IN INCHES
0 1/2" 1" 2"
0 4' 8'

NOTES:

1. STRUCTURES TO BE LINED WITH SEWPERCOAT (REFERENCE SPECIFICATION SECTION 09 96 00)

SHEET KEYNOTE LEGEND

KEYNOTE	DESCRIPTION
1	16" DI TEE, FLG
2	16" PLUG VALVE, FLG
3	16"x12" DI CONCENTRIC REDUCER, FLG
4	16" HDPE FLANGE ADAPTER WITH BACKING RING
5	16" HDPE SPOOL, DR11
6	16" HDPE 90 DEG BEND
7	2" AIR RELEASE VALVE WITH DRAIN TO WET WELL
8	24" PLUG VALVE, FLG
9	24" DISMANTLING JOINT
10	24" MAGNETIC FLOW METER, FLG
11	24" 90 DEG DI BEND, FLG
12	24" DIP SPOOL, FLGxPE
13	24" 90 DEG DI BEND, RMJ
14	24" DI TEE, FLG
15	12" DIP SPOOL, FLG
16	16" BLIND FLANGE
17	RESTRAINING RODS
18	12" 22.5 DEG DI BEND, RMJ
19	12" DIP SPOOL, RMJ

CONSTRUCTION DOCUMENTS

No.	REVISIONS	DATE	BY

Kimley»Horn

PROFESSIONAL ENGINEER
KELLY B. SMITH, P.E.
0-64744-1B
U.S. VIRGIN ISLANDS

KHA PROJECT 045826000
DATE JUNE 2026
SCALE: AS SHOWN
DESIGNED BY: KBS
DRAWN BY: RLL
CHECKED BY: MTS

PUMP STATION DETAILS

LBJ SEWERSHED REHABILITATION
PREPARED FOR
VIWMA

SHEET NUMBER
M-08

Autodesk Docs://045826000 St Croix LBJ Pump Station/LBJ Triplex (Submersible at Grade) R2024.rvt
This document, together with the concepts and designs presented herein, as an instrument of service, is intended only for the specific purpose and client for which it was prepared. Reuse of and improper reliance on this document without written authorization and adaptation by Kimley-Horn and Associates, Inc. shall be without liability to Kimley-Horn and Associates, Inc.

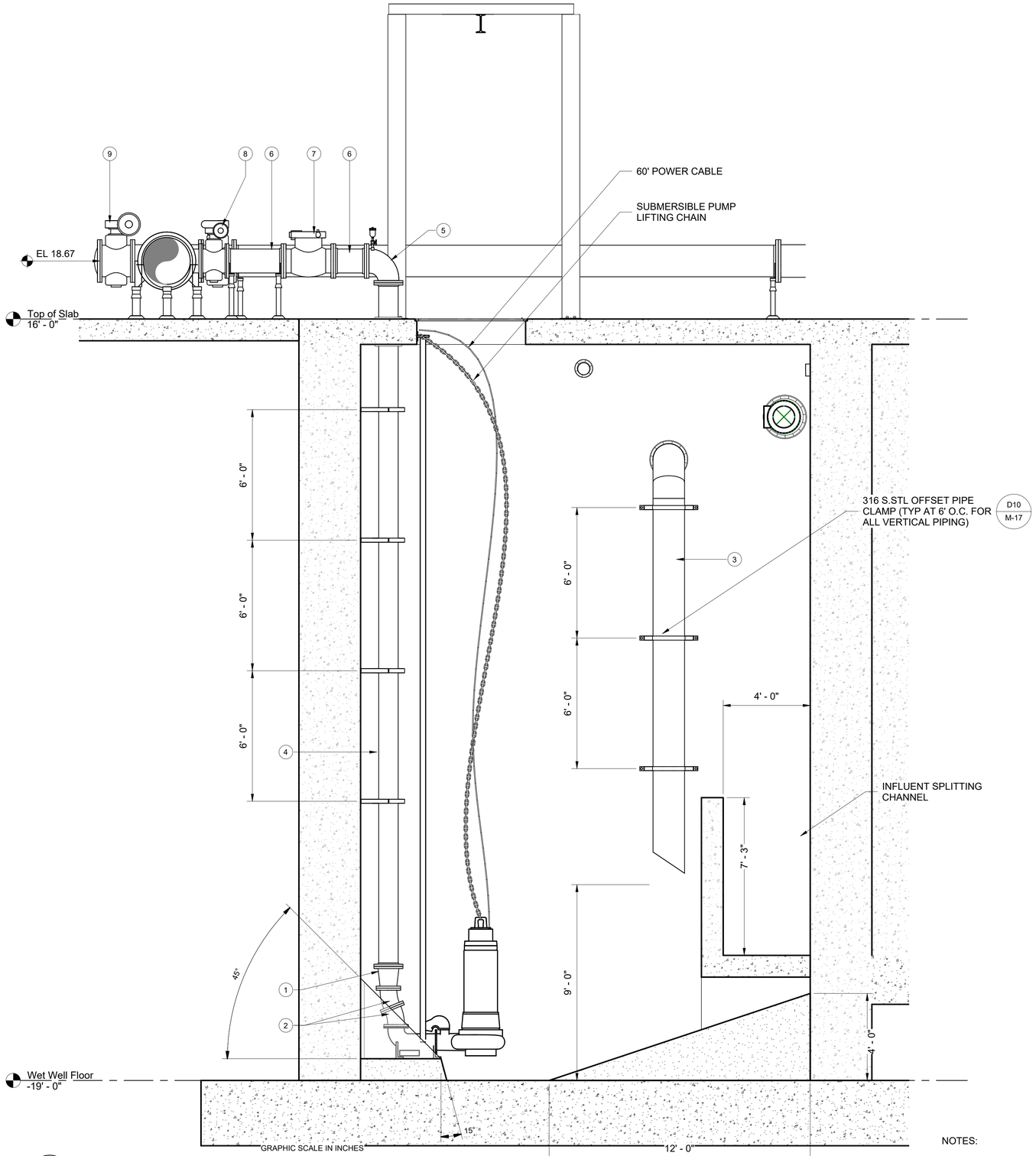

H
M-04
TYPICAL SUBMERSIBLE PUMP
ELEVATION
3/8" = 1'-0"

SHEET KEYNOTE LEGEND	
KEYNOTE	DESCRIPTION
1	10"x8" DI CONCENTRIC REDUCER, FLG
2	8" 22.5 DEG DI BEND, FLG
3	16" HDPE SPOOL, DR11
4	10" SCH10 316 S.STL SPOOL, BW
5	12"x10" REDUCING 90 BEND, FLG
6	12" DIP SPOOL, FLG
7	12" SWING CHECK VALVE, FLG
8	12" PLUG VALVE, FLG
9	16" PLUG VALVE, FLG

NOTES:

1. STRUCTURES TO BE LINED WITH SEWPERCOAT (REFERENCE SPECIFICATION SECTION 09 96 00)

CONSTRUCTION DOCUMENTS

No.	REVISIONS	DATE	BY

Kimley»Horn

PROFESSIONAL ENGINEER
KELLY B. SMITH, P.E.
0-64744-1B
U.S. VIRGIN ISLANDS

KHA PROJECT 045826000
DATE JUNE 2026
SCALE: AS SHOWN
DESIGNED BY: KBS
DRAWN BY: RLL
CHECKED BY: MTS

PUMP STATION DETAILS

LBJ SEWERSHED REHABILITATION
PREPARED FOR
VIWMA

SHEET NUMBER
M-09

Autodesk Docs://045826000 St Croix LBJ Pump Station/LBJ Triplex (Submersible at Grade) R2026.rvt
This document, together with the concepts and designs presented herein, as an instrument of service, is intended only for the specific purpose and client for which it was prepared. Reuse of and improper reliance on this document without written authorization and adaptation by Kimley-Horn and Associates, Inc. shall be without liability to Kimley-Horn and Associates, Inc.

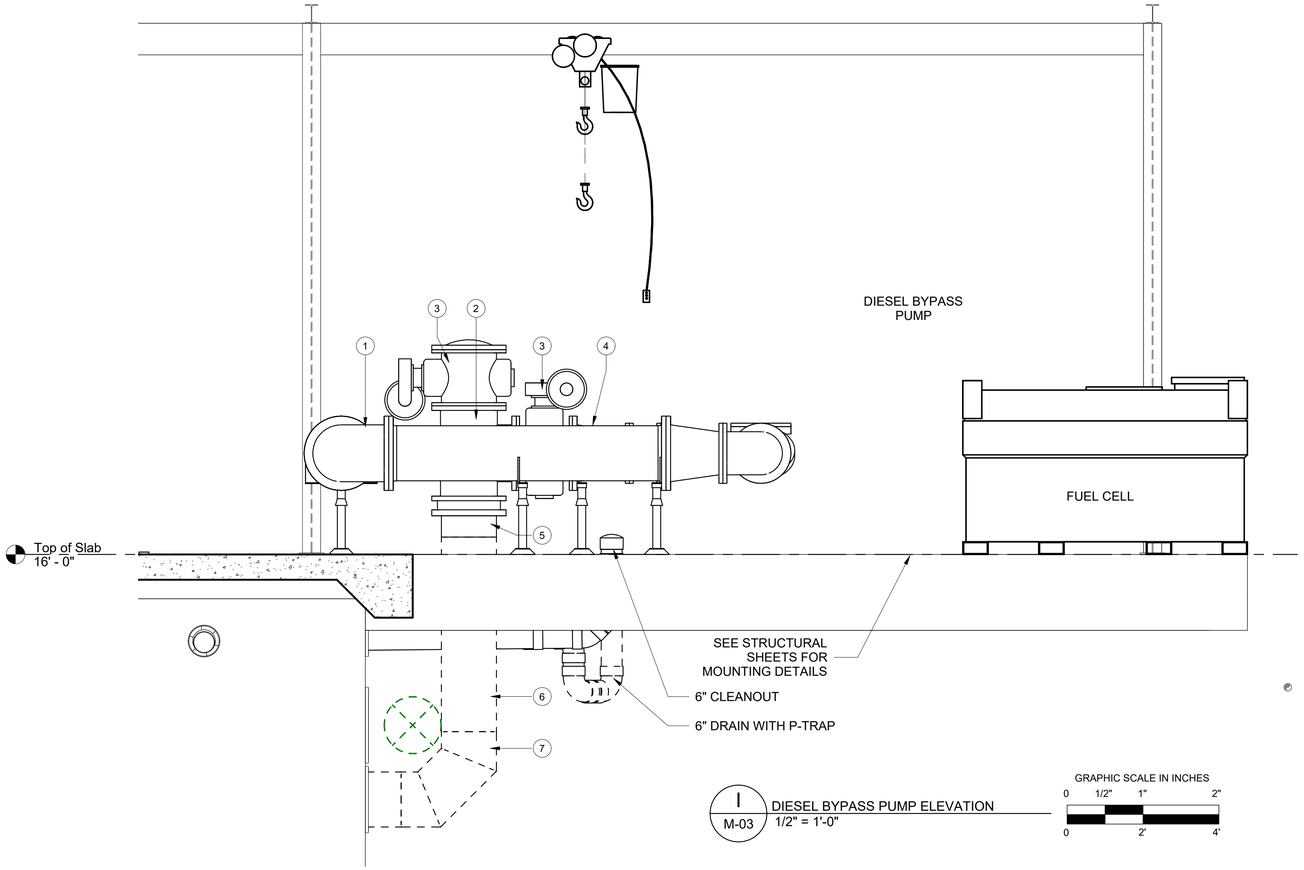

I
M-03
DIESEL BYPASS PUMP ELEVATION
1/2" = 1'-0"

GRAPHIC SCALE IN INCHES
0 1/2" 1" 2"
0 2' 4'

SHEET KEYNOTE LEGEND	
KEYNOTE	DESCRIPTION
1	16" 90 DEG DI BEND, FLG
2	16" DI TEE, FLG
3	16" PLUG VALVE, FLG
4	16"x12" DI CONCENTRIC REDUCER, FLG
5	16" HDPE FLANGE ADAPTER WITH BACKING RING
6	16" HDPE SPOOL, DR11
7	16" HDPE 90 DEG BEND

CONSTRUCTION DOCUMENTS

No.	REVISIONS	DATE	BY

Kimley»Horn

PROFESSIONAL ENGINEER
KELLY B. SMITH, P.E.
0-64744-1B
U.S. VIRGIN ISLANDS

KHA PROJECT 045826000
DATE JUNE 2026
SCALE: AS SHOWN
DESIGNED BY: KBS
DRAWN BY: RLL
CHECKED BY: MTS

PUMP STATION DETAILS

LBJ SEWERSHED REHABILITATION
PREPARED FOR
VIWMA

SHEET NUMBER
M-10

Autodesk Docs://045826000 St Croix LBJ Pump Station/LBJ Triplex (Submersible at Grade) R2024.rvt
This document, together with the concepts and designs presented herein, as an instrument of service, is intended only for the specific purpose and client for which it was prepared. Reuse of and improper reliance on this document without written authorization and adaptation by Kimley-Horn and Associates, Inc. shall be without liability to Kimley-Horn and Associates, Inc.

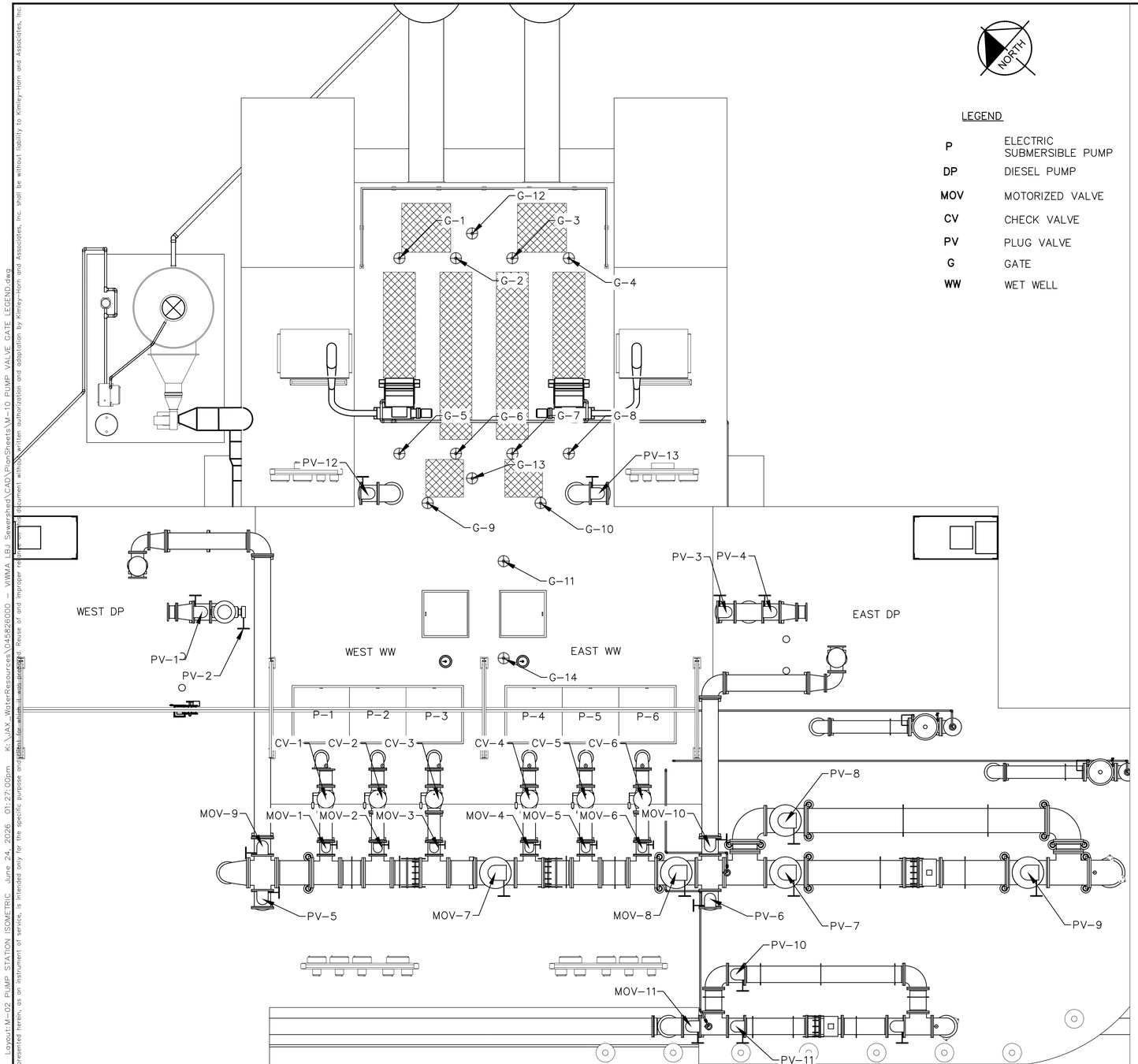

LBJ PUMP STATION PUMP, VALVE, GATE LEGEND
N.T.S.

LEGEND

P	ELECTRIC SUBMERSIBLE PUMP
DP	DIESEL PUMP
MOV	MOTORIZED VALVE
CV	CHECK VALVE
PV	PLUG VALVE
G	GATE
WW	WET WELL

PUMP, VALVE, & GATE LIST

IDENTIFIER	ITEM	LOCATION	OPERATOR
P-1	PUMP	WETWELL- WEST	LEVEL CONTROL
P-2	PUMP	WETWELL- WEST	LEVEL CONTROL
P-3	PUMP	WETWELL- WEST	LEVEL CONTROL
P-4	PUMP	WETWELL- EAST	LEVEL CONTROL
P-5	PUMP	WETWELL- EAST	LEVEL CONTROL
P-6	PUMP	WETWELL- EAST	LEVEL CONTROL
G-1	SLIDE GATE	INFLUENT- WEST	HANDWHEEL
G-2	SLIDE GATE	INFLUENT- WEST	HANDWHEEL
G-3	SLIDE GATE	INFLUENT- EAST	HANDWHEEL
G-4	SLIDE GATE	INFLUENT- EAST	HANDWHEEL
G-5	SLIDE GATE	INFLUENT- WEST	HANDWHEEL
G-6	SLIDE GATE	INFLUENT- WEST	HANDWHEEL
G-7	SLIDE GATE	INFLUENT- EAST	HANDWHEEL
G-8	SLIDE GATE	INFLUENT- EAST	HANDWHEEL
G-9	SLIDE GATE	INFLUENT- WEST	HANDWHEEL
G-10	SLIDE GATE	INLFUENT- EAST	HANDWHEEL
G-11	SLIDE GATE	WETWELL- EAST	HANDWHEEL
G-12	SLIDE GATE	INFLUENT- WEST	HANDWHEEL
G-13	SLIDE GATE	INFLUENT- WEST	HANDWHEEL
G-14	SLIDE GATE	WETWELL- WEST	HANDWHEEL
MOV-1	PLUG VALVE	DISCHARGE- WEST	MOTOR
MOV-2	PLUG VALVE	DISCHARGE- WEST	MOTOR
MOV-3	PLUG VALVE	DISCHARGE- WEST	MOTOR
MOV-4	PLUG VALVE	DISCHARGE- EAST	MOTOR
MOV-5	PLUG VALVE	DISCHARGE- EAST	MOTOR
MOV-6	PLUG VALVE	DISCHARGE- EAST	MOTOR
MOV-7	PLUG VALVE	DISCHARGE- EAST/WEST	MOTOR
MOV-8	PLUG VALVE	DISCHARGE- EAST	MOTOR
MOV-9	PLUG VALVE	DISCHARGE- WEST	MOTOR
MOV-10	PLUG VALVE	DISCHARGE- EAST	MOTOR
MOV-11	PLUG VALVE	DISCHARGE- WEST	MOTOR
PV-1	PLUG VALVE	DP SUCTION- WEST	HANDWHEEL
PV-2	PLUG VALVE	DP SUCTION- WEST	HANDWHEEL
PV-3	PLUG VALVE	DP SUCTION- EAST	HANDWHEEL
PV-4	PLUG VALVE	DP SUCTION- EAST	HANDWHEEL
PV-5	PLUG VALVE	DISCHARGE- WEST	HANDWHEEL
PV-6	PLUG VALVE	DISCHARGE- EAST	HANDWHEEL
PV-7	PLUG VALVE	24" FLOW METER	HANDWHEEL
PV-8	PLUG VALVE	24" BYPASS	HANDWHEEL
PV-9	PLUG VALVE	24" FLOW METER	HANDWHEEL
PV-10	PLUG VALVE	16" BYPASS	HANDWHEEL
PV-11	PLUG VALVE	16" FLOW METER	HANDWHEEL
PV-12	PLUG VALVE	INFLUENT- WEST	HANDWHEEL
PV-13	PLUG VALVE	INFLUENT- EAST	HANDWHEEL
DP-1	DIESEL BYPASS PUMP	WETWELL- WEST	LEVEL CONTROL
DP-2	DIESEL BYPASS PUMP	WETWELL- EAST	LEVEL CONTROL

CONSTRUCTION DOCUMENTS

No.	REVISIONS	DATE	BY

Kimley»Horn

EDT Sign of Quality

PROFESSIONAL ENGINEER
KELLY B. SMITH, P.E.
0-64744-1B
U.S. VIRGIN ISLANDS

KHA PROJECT 045826000
DATE JUNE 2026
SCALE AS SHOWN
DESIGNED BY KBS
DRAWN BY MC
CHECKED BY MTS

PUMP, VALVE, GATE LEGEND

LBJ PUMP STATION
PREPARED FOR
VIWMA

SHEET NUMBER
M-11

Plotted By:Chaturvedi, Manas Sheet Set:FEC Layout:M-02 PUMP STATION ISOMETRIC June 24, 2026 01:27:00pm K:\VIA_WaterResources\045826000 - VIWMA LBJ Sewershed\CAD\PlanSheets\M-10 PUMP VALVE GATE LEGEND.dwg
This document, together with the concepts and designs presented herein, as an instrument of service, is intended only for the specific purpose and client for which it was prepared. Reuse of and improper reliance on this document without written authorization and adaptation by Kimley-Horn and Associates, Inc. shall be without liability to Kimley-Horn and Associates, Inc.

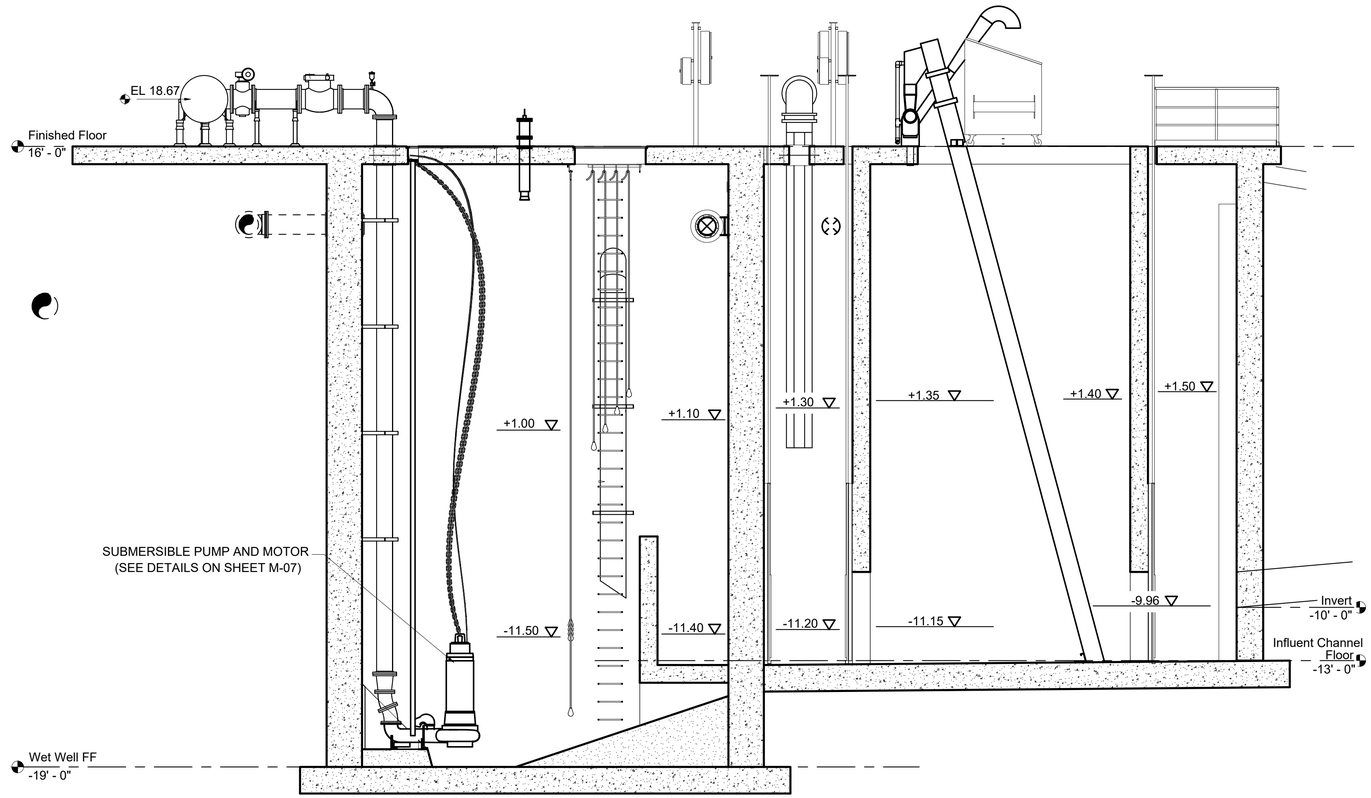

NOTES:

1. CONTRACTOR SHALL PROVIDE TEN (10) DAYS (8 HRS/DAY) OF OPERATIONAL PERFORMANCE TESTING AND TRAINING
2. TESTING AND TRAINING SHALL DEMONSTRATE FULL OPERATIONAL CONFORMANCE WITH THE DESIGN PLANS AND SPECIFICATIONS
3. THE OPERATIONAL TESTING AND TRAINING SHALL BE CONDUCTED TO SHOW OPERATIONS UNDER ALL 4 OPERATING CONDITIONS ON THIS DRAWING
4. THE TESTING AND TRAINING SHALL ALSO INCLUDE OPERATION OF THE EMERGENCY DIESEL BYPASS PUMPS UNDER SIMULATED PUMP FAILURE CONDITION.
5. TRAINING OF OWNERS STAFF WILL BE ONGOING OVER THE 10-DAY PERIOD. THIS PERIOD SHALL BE IN ADDITION TO OTHER TESTING REQUIRED TO DEMONSTRATE PROPER PERFORMANCE OF ALL EQUIPMENT AND SYSTEMS.
6. CONTRACTOR SHALL PROVIDE WRITTEN TRAINING MATERIALS FOR OWNER STAFF FOR USE DURING AND FOLLOWING THE TESTING AND TRAINING PERIOD.
7. TESTING AND TRAINING SHALL BE AS INCLUDED UNDER THE BID ITEM FOR TESTING AND TRAINING

EMERGENCY BYPASS HYDRAULIC PROFILE
(CONDITION 2 PUMPS "ON", NEGLIGIBLE SCREEN BLOCKAGE)

FLOW = 5,000 GPM

PUMP STATION HYDRAULIC PROFILE
(CONDITION 2 PUMPS "ON", 30% SCREEN BLOCKAGE)

FLOW = 5,000 GPM

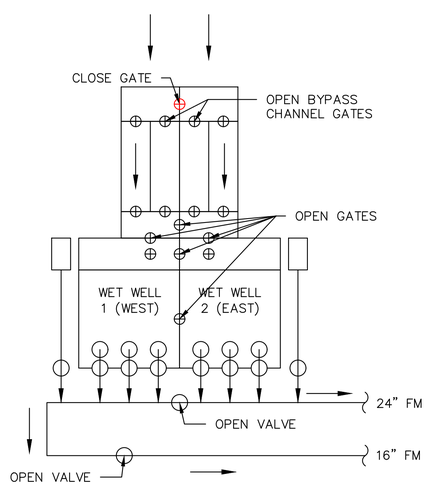

PUMP STATION OPERATION SCENARIO 1 - BOTH WET WELLS INTERCONNECTED & DUAL FORCE MAINS (NORMAL OPERATING CONDITIONS)

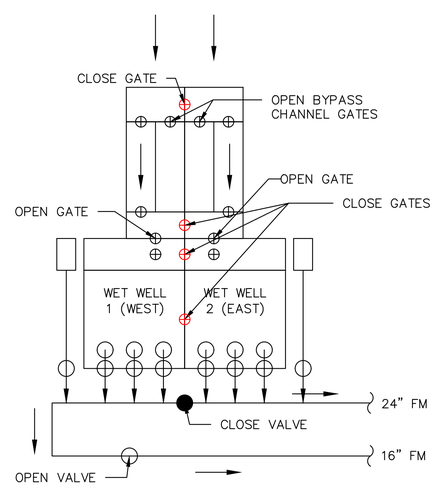

PUMP STATION OPERATION SCENARIO 2 - SEPARATE WET WELL & FORCE MAINS

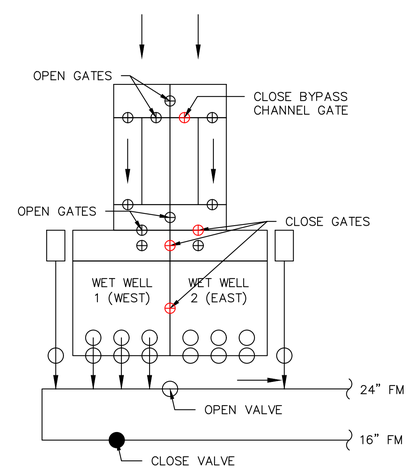

PUMP STATION OPERATION SCENARIO 3 - WEST WET WELL IN OPERATION

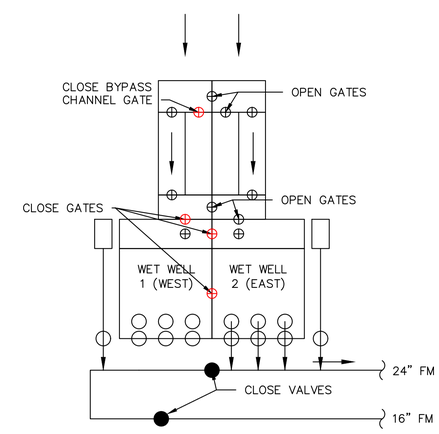

PUMP STATION OPERATION SCENARIO 4 - EAST WET WELL IN OPERATION

CONSTRUCTION DOCUMENTS

No.	REVISIONS	DATE	BY

Kimley»Horn

EDPT Sign of Quality

PROFESSIONAL ENGINEER
KELLY B. SMITH, P.E.
0-64744-1B
U.S. VIRGIN ISLANDS

KHA PROJECT 045826000
DATE JUNE 2026
SCALE AS SHOWN
DESIGNED BY KBS
DRAWN BY MC
CHECKED BY MTS

HYDRAULIC PROFILE

LBJ PUMP STATION
PREPARED FOR
VIWMA

SHEET NUMBER
M-12

Plotted By:Chaturvedi, Manas Sheet Set:FEC Layout:M-12 HYDRAULIC PROFILE June 24, 2026 01:27:10pm K:\JAX_WaterResources\045826000 - VIWMA LBJ Sewershed\CAD\PlanSheets\M-XX HYDRAULIC PROFILE.dwg
This document, together with the concepts and designs presented herein, as an instrument of service, is intended only for the specific purpose and client for which it was prepared. Reuse of and improper reliance on this document without written authorization and adaptation by Kimley-Horn and Associates, Inc. shall be without liability to Kimley-Horn and Associates, Inc.

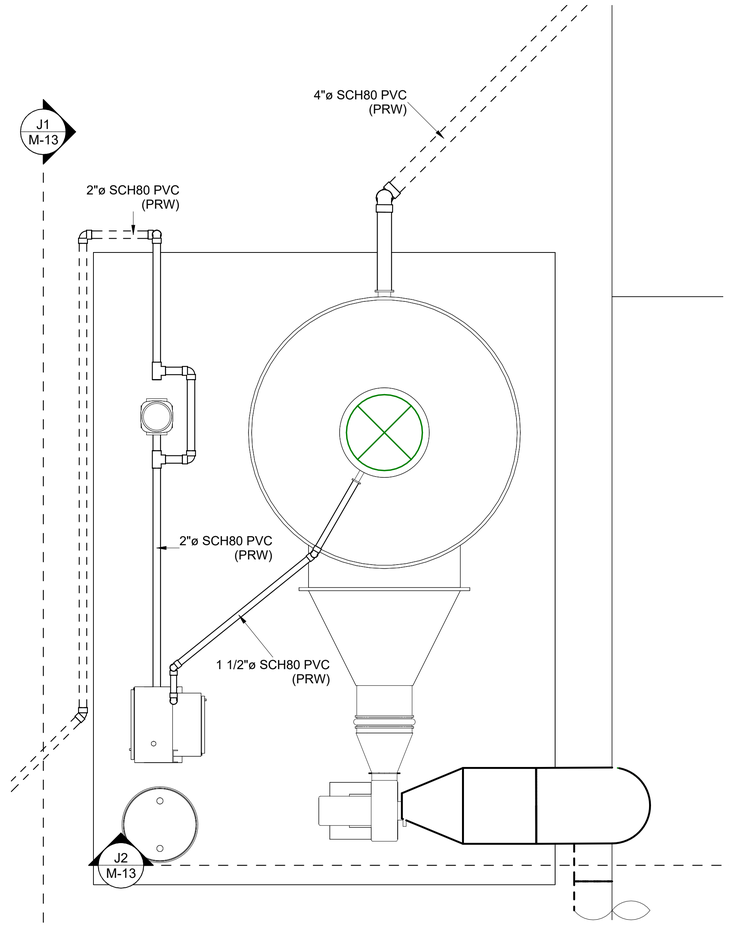

J / M-03 ODOR CONTROL DETAIL - PLAN
1/2" = 1'-0"

GRAPHIC SCALE IN INCHES
0 1/2" 1" 2"
0 2' 4'

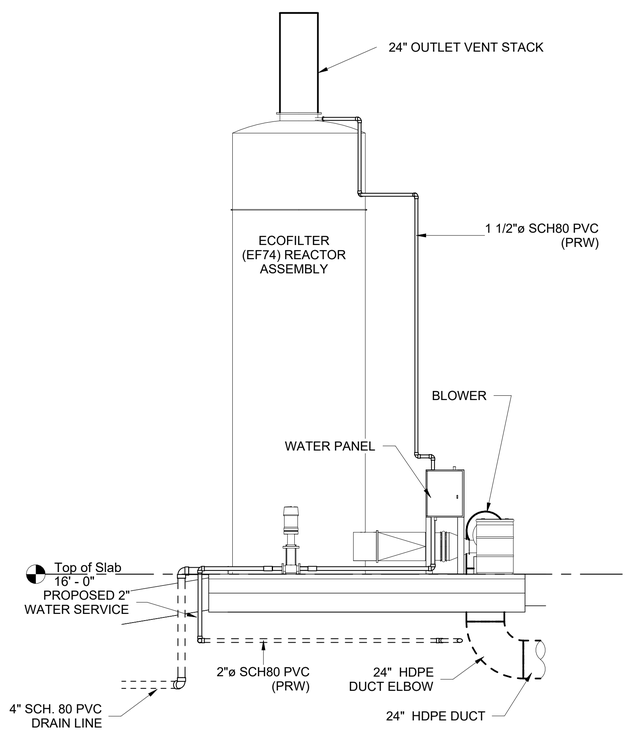

J1 / M-13 ODOR CONTROL SECTION
1/4" = 1'-0"

GRAPHIC SCALE IN INCHES
0 1/2" 1" 2"
0 4' 8'

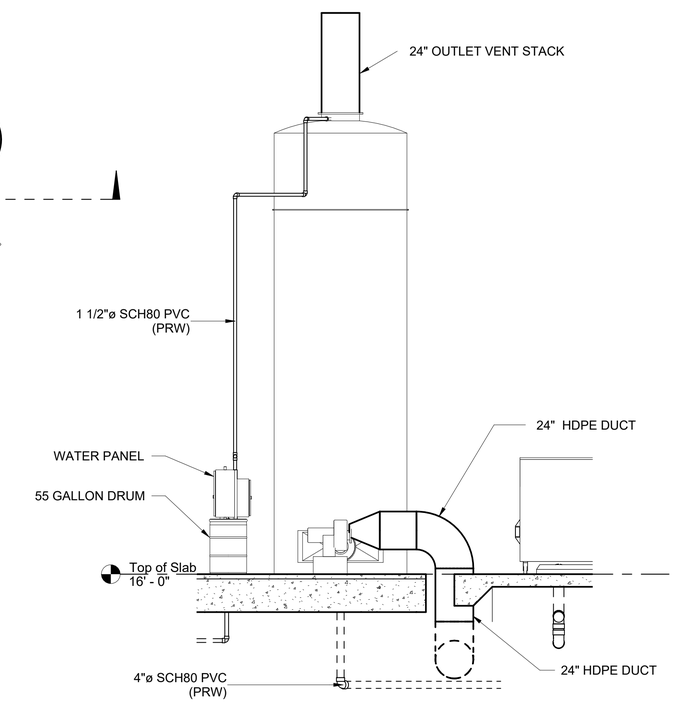

J2 / M-13 ODOR CONTROL SECTION 2
1/4" = 1'-0"

GRAPHIC SCALE IN INCHES
0 1/2" 1" 2"
0 4' 8'

CONSTRUCTION DOCUMENTS

No.	REVISIONS	DATE	BY

Kimley»Horn

Sign of Quality

PROFESSIONAL ENGINEER
KELLY B. SMITH, P.E.
0-64744-1B
U.S. VIRGIN ISLANDS

KHA PROJECT 045826000
DATE JUNE 2026
SCALE: AS SHOWN
DESIGNED BY: KBS
DRAWN BY: RLL
CHECKED BY: MTS

ODOR CONTROL DETAILS

LBJ SEWERSHED REHABILITATION
PREPARED FOR
VIWMA

SHEET NUMBER
M-13

Autodesk Docs://045826000 St Croix LBJ Pump Station/LBJ Triplex (Submersible at Grade) R2024.rvt
This document, together with the concepts and designs presented herein, as an instrument of service, is intended only for the specific purpose and client for which it was prepared. Reuse of and improper reliance on this document without written authorization and adaptation by Kimley-Horn and Associates, Inc. shall be without liability to Kimley-Horn and Associates, Inc.

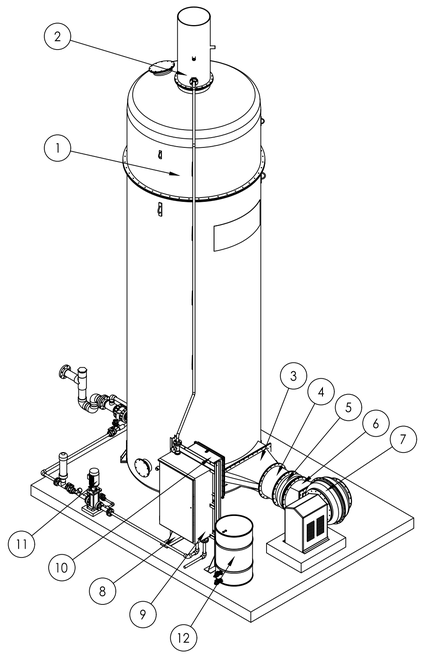

ODOR CONTROL ISO VIEW

ITEM	PART NO.	QTY.	DESCRIPTION	OPERATING WEIGHT (LB)
1	RA074100	1	ECOFILTER, EF74, REACTOR ASSEMBLY, FRP	18000
2	NS201500	1	Ø20", PS15-69 X Ø1½", ANSI 150, NOZZLE STACK, FRP	35
3	TP204008	1	Ø20", PS15-69, RECTANGULAR INLET TRANSITION, FRP	24
4	DV201100	1	Ø20", PS15-69, CONTROL - LEVER DAMPER VALVE, FRP	25
5	FC200000	1	Ø20", PS15-69, FLEX CONNECTOR W/ 316SS BACKING RINGS, EPDM	12
6	BT200000	1	Ø20" PS15-69, BLOWER OUTLET TRANSITION, FRP	20
7	BL018100	1	BLOWER, CW, BH, FRP	325
8	PS342211	1	PANEL STAND, 316SS	112
9	WP151010	1	Ø1½", ANSI 150, WATER PANEL, FRP	160
10	CD100000	1	ELECTRICAL CONTROL PANEL, FRP	40
11	RS200001	1	Ø1½", SCH80, STARTUP SYSTEM, PVC-U	125
12	NB550100	1	55 GAL, NUTRIENT BARREL, HDPE	450

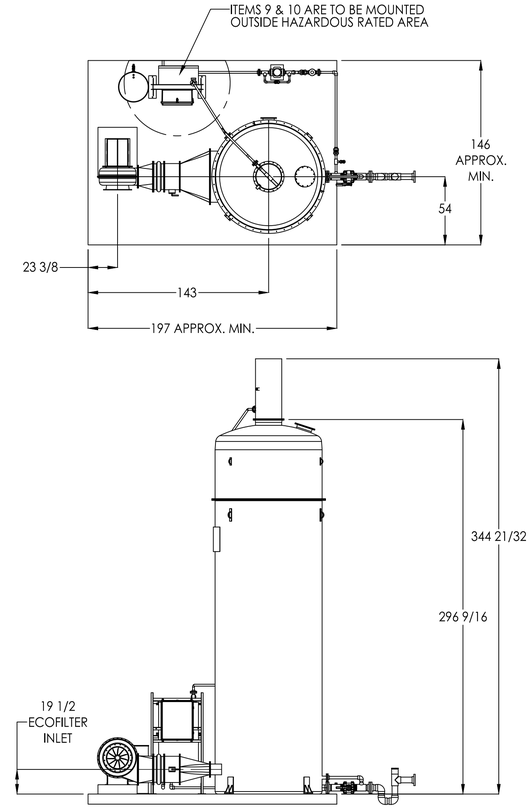

ODOR CONTROL TOP AND SECTION VIEW

NOTES:
1. FOUNDATION PAD MUST BE FABRICATED UNIFORM IN TEXTURE AND APPEARANCE AND MEET A SURFACE PLANE TOLERANCE OF ⅛" IN 10'
2. SYSTEM PLACEMENT AND CONCRETE DIMENSIONS ARE FOR ILLUSTRATION ONLY.
3. REACTOR TO BE SET ON MINIMUM TWO (2X) LAYERS OF TYPE II (NO. 30) ASTM D226 FELT PAPER (PROVIDED BY OTHERS)
4. ECOFILTER EF74 (PER VESSEL)
   A. VESSEL DIMENSIONS = Ø 7'-0" X 24'-8 $\frac{9}{16}$"
   B. LOAD DISTRIBUTION AREA = 38.49 FT^2
   C. SHIPPING WEIGHT = 4500 LB
   D. OPERATING WEIGHT = 18000 LB

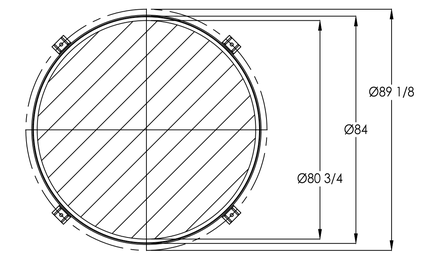

ECOFILTER EF74
LOADING DIAGRAM
SCALE: 1 : 28

ODOR CONTROL SYSTEM DESIGN CONDITIONS			
PARAMETER	UNITS	AVERAGE	TRANSIENT MAXIMUM
AIRFLOW	CFM	4800	4800
HYDROGEN SULFIDE (H2S)	PPMV	50	150
VOLATILE ORGANIC COMPOUNDS (VOCS)	PPMV	< 0.5	< 1.0
REDUCED SULFUR COMPOUNDS (RSCS)	PPMV	< 0.5	< 1.0
VOLATILE FATTY ACIDS (VFAS)	PPMV	< 0.5	< 1.0
ODOUROUS AIR TEMPERATURE	°F	59–110	105
AMBIENT AIR TEMPERATURE	°F	33–110	120

CONSTRUCTION DOCUMENTS

No.	REVISIONS	DATE	BY

Kimley»Horn

EDT Sign of Quality

PROFESSIONAL ENGINEER
KELLY B. SMITH, P.E.
0-64744-1B
U.S. VIRGIN ISLANDS

KHA PROJECT 045826000
DATE JUNE 2026
SCALE AS SHOWN
DESIGNED BY KBS
DRAWN BY MC
CHECKED BY MTS

ODOR CONTROL DETAILS

LBJ PUMP STATION
PREPARED FOR VIWMA

SHEET NUMBER
M-14

Plotted By:Chaturvedi, Manas Sheet Set:FEC Layout:M-14 ODOR CONTROL DETAILS June 24, 2026 01:27:17pm K:\JAX_WaterResources\045826000 - VIWMA LBJ Sewershed\CAD\PlanSheets\M-16 ODOR CONTROL DETAILS.dwg
This document, together with the concepts and designs presented herein, as an instrument of service, is intended only for the specific purpose and client for which it was prepared. Reuse of and improper reliance on this document without written authorization and adaptation by Kimley-Horn and Associates, Inc. shall be without liability to Kimley-Horn and Associates, Inc.

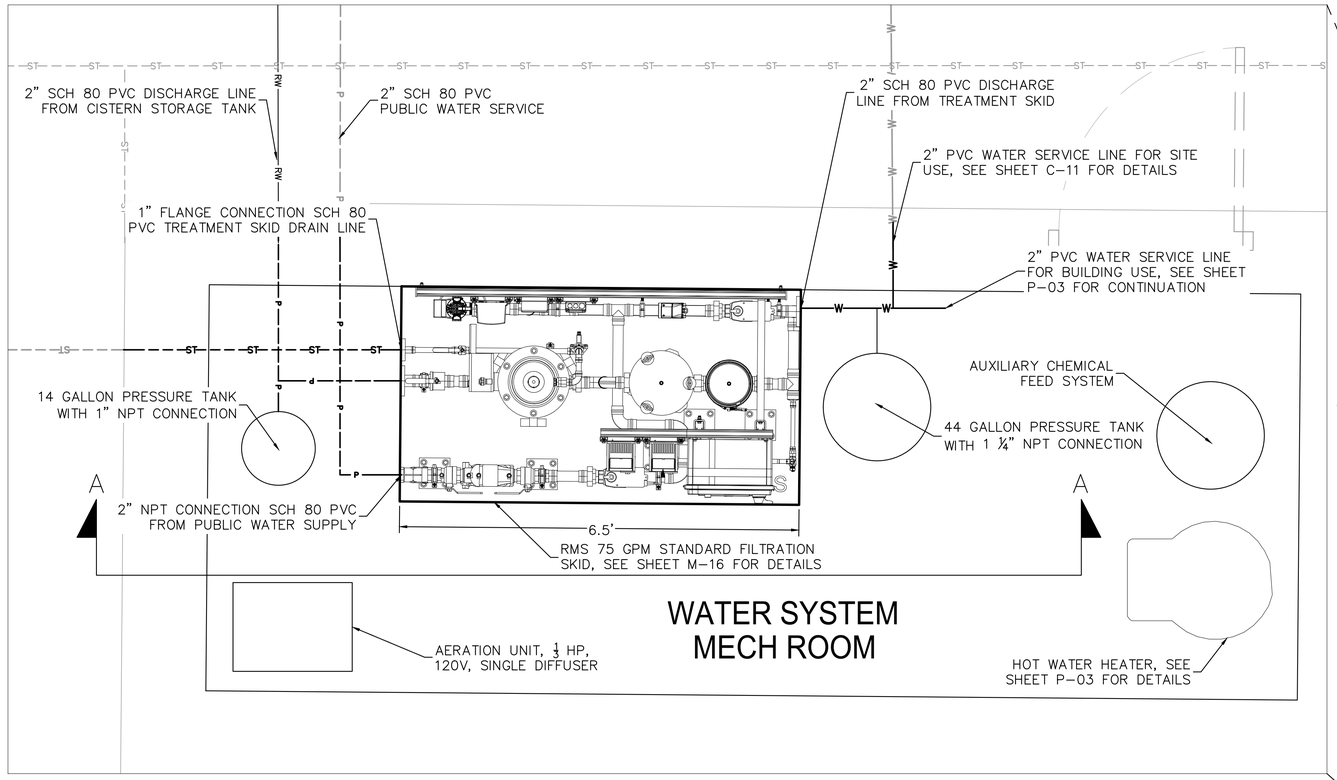

NOTES:

1) CONTRACTOR TO INSTALL ALL NECESSARY PIPE SUPPORTS AND ANCHORS TO WALL AND FLOOR MOUNTED PIPE. ALL SUPPORTS AND ANCHORS TO BE STAINLESS STEEL.
2) TREATMENT SKID AND PRESSURE TANKS TO BE MOUNTED PER MANUFACTURER'S RECOMMENDATIONS.
3) SEE SHEET M-16 FOR STORAGE AND TREATMENT SYSTEM SCHEMATIC AND DETAILS.
4) SEE SHEETS C-11 AND P-03 FOR PIPING SYSTEM CONTINUATION.

NORTH

GRAPHIC SCALE IN FEET
0 10 20 40

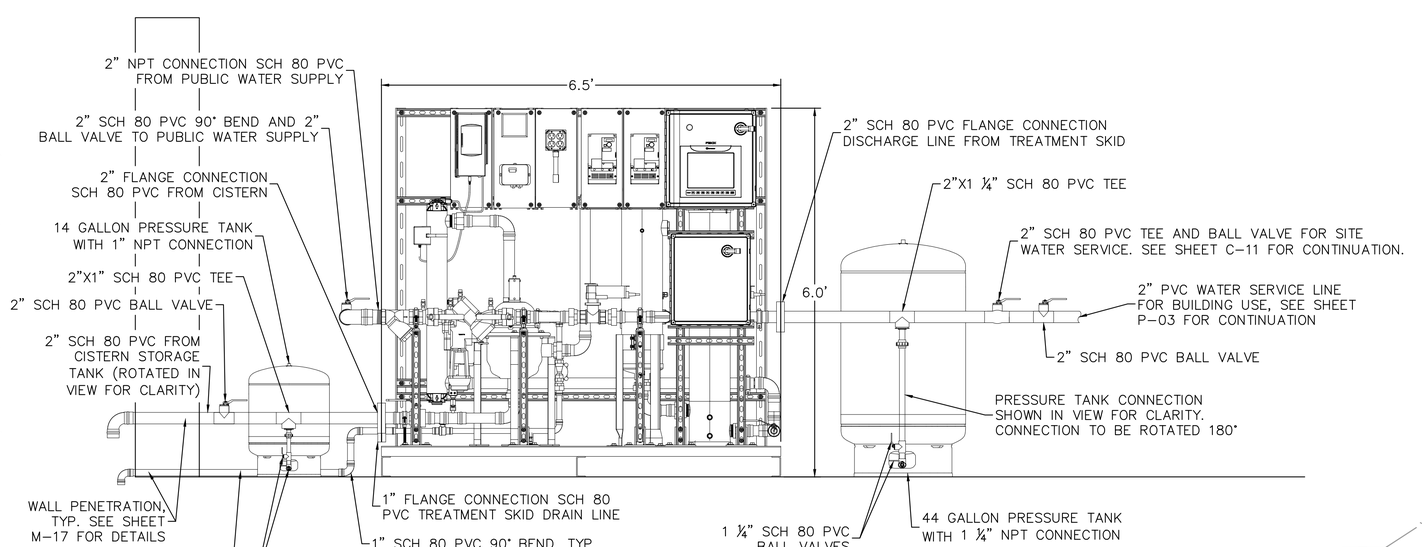

WATER SYSTEM MECH ROOM SECTION A–A

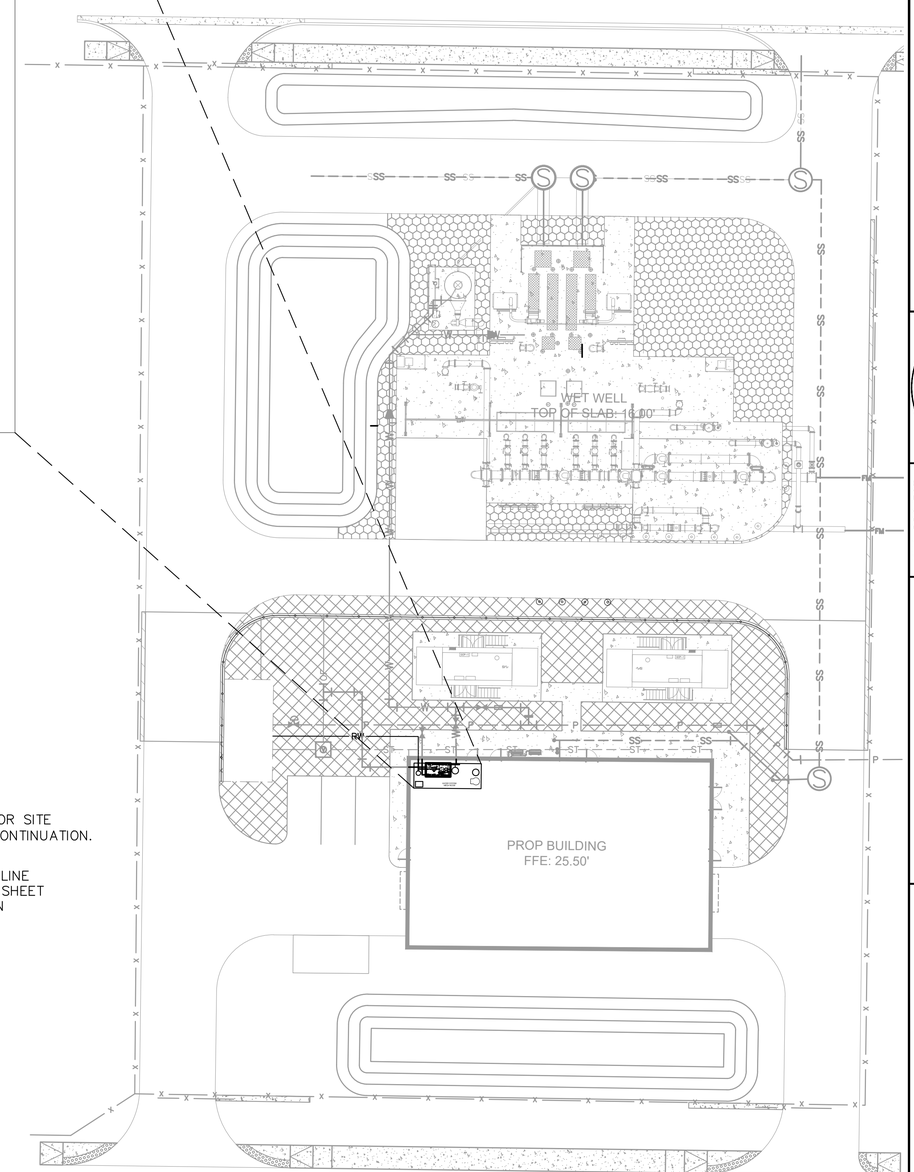

CONSTRUCTION DOCUMENTS

No.	REVISIONS	DATE	BY

Kimley»Horn

PROFESSIONAL ENGINEER
KELLY B. SMITH, P.E.
0-64744-1B
U.S. VIRGIN ISLANDS

KHA PROJECT 045826000
DATE JUNE 2026
SCALE AS SHOWN
DESIGNED BY KBS
DRAWN BY MC
CHECKED BY MTS

WATER SYSTEM MECHANICAL ROOM LAYOUT

LBJ PUMP STATION
PREPARED FOR
VIWMA

SHEET NUMBER
M-15

Plotted By: Chaturvedi, Manas Sheet Set: FEC Layout: M-15 WATER SYSTEM MECHANICAL ROOM LAYOUT June 24, 2026 01:27:37pm K:\JAX_WaterResources\045826000 - VIWMA LBJ Sewershed\CAD\PlanSheets\M-11 WATER SYSTEM MECHANICAL ROOM LAYOUT.dwg
This document, together with the concepts and designs presented herein, as an instrument of service, is intended only for the specific purpose and client for which it was prepared. Reuse of and improper reliance on this document without written authorization and adaptation by Kimley-Horn and Associates, Inc. shall be without liability to Kimley-Horn and Associates, Inc.

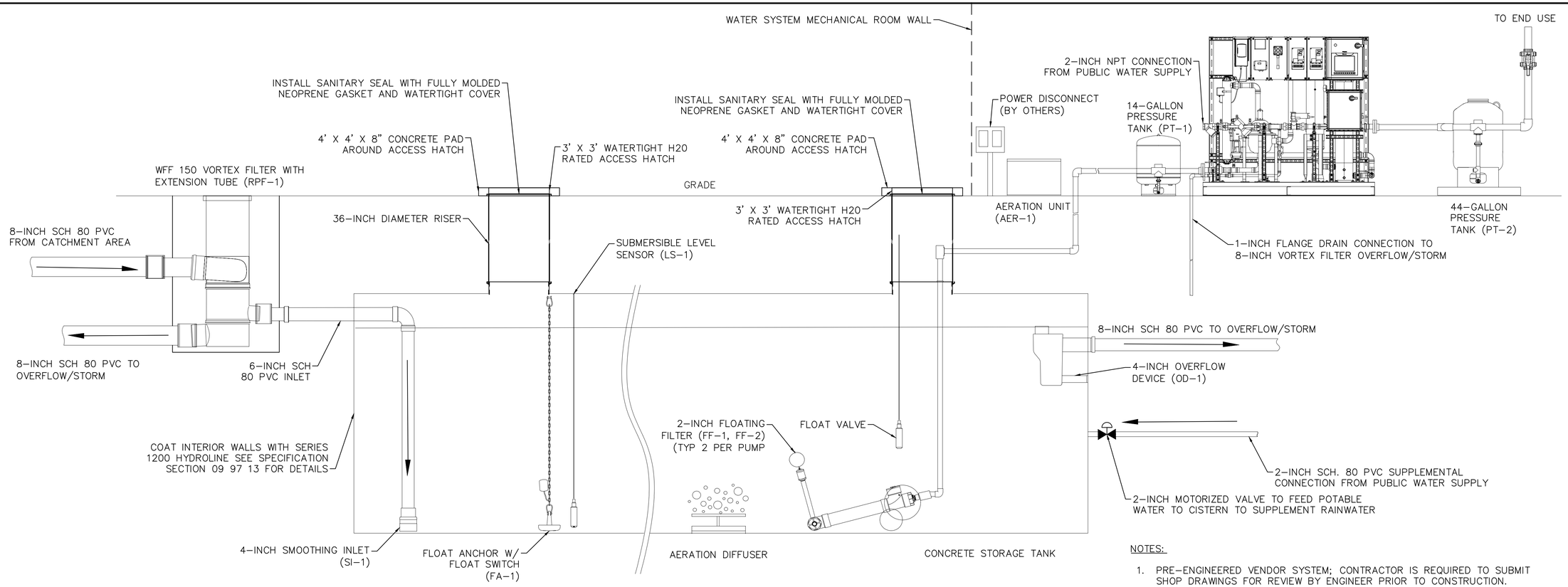

CISTERN STORAGE AND TREATMENT SYSTEM SCHEMATIC
(NOT TO SCALE)

NOTES:

1. PRE-ENGINEERED VENDOR SYSTEM; CONTRACTOR IS REQUIRED TO SUBMIT SHOP DRAWINGS FOR REVIEW BY ENGINEER PRIOR TO CONSTRUCTION.
2. AERATION UNIT PIPING TO BE FIELD ENGINEERED; CONTRACTOR TO SUBMIT PIPING PLAN FOR APPROVAL BY ENGINEER PRIOR TO CONSTRUCTION.
3. SEVERAL COMPONENTS WILL BE FIELD ENGINEERED; CONTRACTOR TO SUBMIT PLAN/SHOP DRAWINGS FOR APPROVAL BY ENGINEER PRIOR TO CONSTRUCTION.

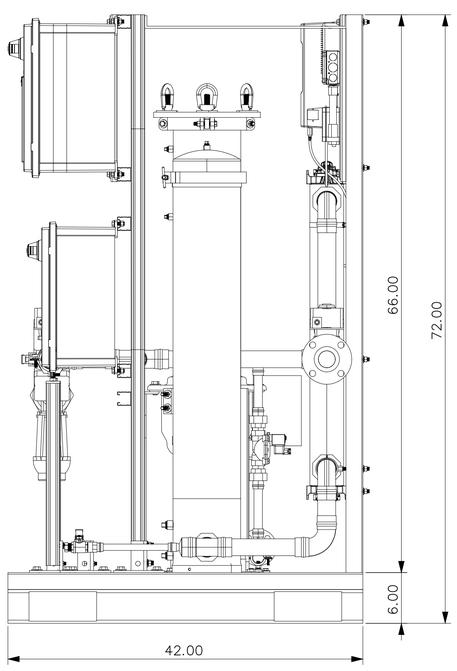

RMS TREATMENT SKID RIGHT VIEW

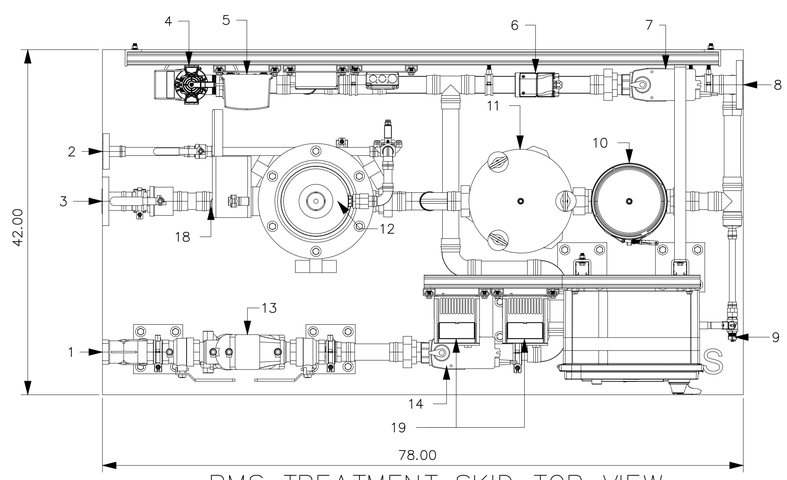

RMS TREATMENT SKID TOP VIEW
(NOT TO SCALE)

1. 2" FPT DOMESTIC INLET.
2. 1" FLANGED DRAIN.
3. 2" FLANGED RW INLET.
4. UV LIGHT.
5. UV CONTROLLER.
6. FLOWMETER.
7. MOTORIZED VALVE.
8. 2" FLANGED OUTLET.
9. .75" DRAIN.
10. CARBON FILTER.
11. SEDIMENT FILTER.
12. BACKWASH FILTER.
13. RPZ.
14. MOTORIZED VALVE.
15. RMS 200 CONTROLLER.
16. SINGLE POINT POWER SOURCE.
17. NOT USED.
18. PRESSURE SENSOR.
19. VFD'S.

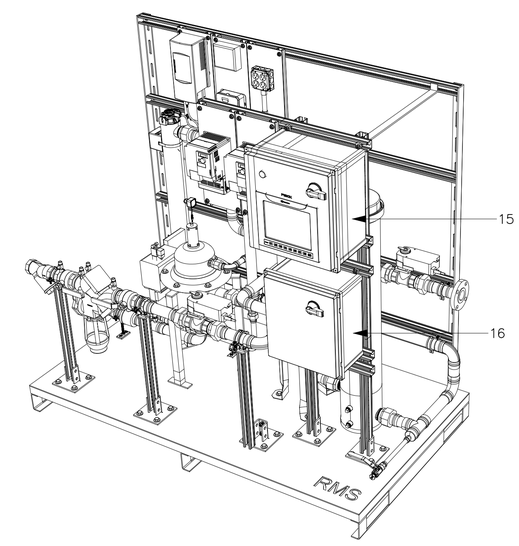

RMS TREATMENT SKID ISO VIEW

CONSTRUCTION DOCUMENTS

No.	REVISIONS	DATE	BY

Kimley»Horn

EDT Sign of Quality

PROFESSIONAL ENGINEER
KELLY B. SMITH, P.E.
0-64744-1B
U.S. VIRGIN ISLANDS

KHA PROJECT 045826000
DATE JUNE 2026
SCALE AS SHOWN
DESIGNED BY KBS
DRAWN BY MC
CHECKED BY MTS

WATER SYSTEM DETAILS

LBJ PUMP STATION
PREPARED FOR
VIWMA

SHEET NUMBER
M-16

Plotted By:Chaturvedi, Manas Sheet Set:FEC Layout:M-16 WATER SYSTEM DETAILS June 24, 2026 01:27:52pm K:\JAX_WaterResources\045826000 - VIWMA LBJ Sewershed\CAD\PlanSheets\M-12 WATER SYSTEM DETAILS.dwg
This document, together with the concepts and designs presented herein, as an instrument of service, is intended only for the specific purpose and client for which it was prepared. Reuse of and improper reliance on this document without written authorization and adaptation by Kimley-Horn and Associates, Inc. shall be without liability to Kimley-Horn and Associates, Inc.

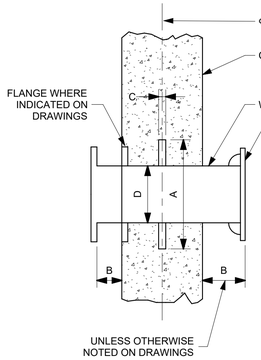

PIPE SIZE D (IN)	DIM A (MIN, IN.)	DIM B (MIN, IN.)	DIM C (MIN, IN.)
4	6.80	6	0.25
6	8.90	8	0.25
8	11.05	9	0.25
10	13.10	9	0.25
12	15.20	9	0.25
14	17.30	9	0.25
16	19.40	9	0.25
18	22.50	9	0.38
20	24.60	9	0.38
24	28.80	12	0.38
30	36.00	12	0.50
36	42.30	12	0.50
42	50.75	12	0.75
48	57.05	12	0.75
54	66.06	15	1.00
60	70.11	15	1.00
64	74.17	15	1.00

D1 / - - WALL PIPE
N.T.S.

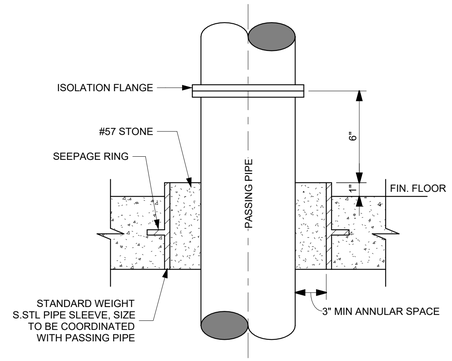

D2 / - - FLOOR PENETRATION (GREATER THAN 3" DIA)
N.T.S.

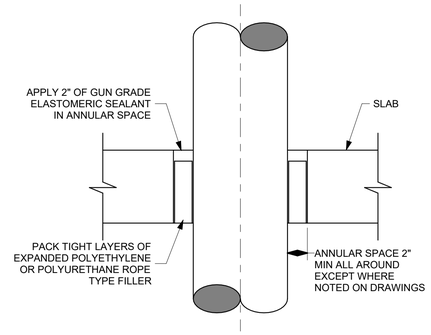

D3 / - - FLOOR PENETRATION (LESS THAN 3" DIA)
N.T.S.

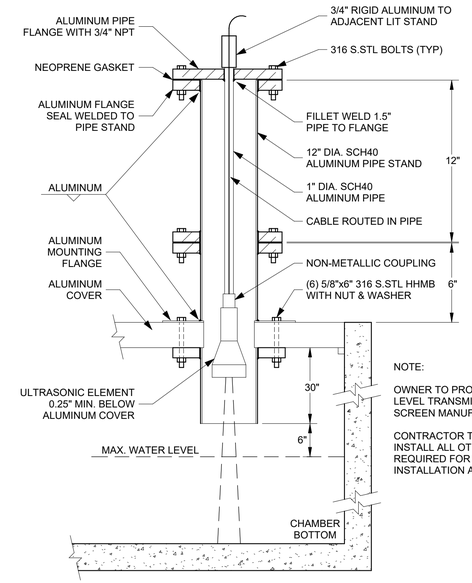

NOTE:

OWNER TO PROVIDE ULTRASONIC LEVEL TRANSMITTER FROM SCREEN MANUFACTURER.

CONTRACTOR TO PROVIDE AND INSTALL ALL OTHER COMPONENTS REQUIRED FOR PROPER INSTALLATION AND OPERATION.

D4 / - - ULTRASONIC LEVEL TRANSMITTER
N.T.S.

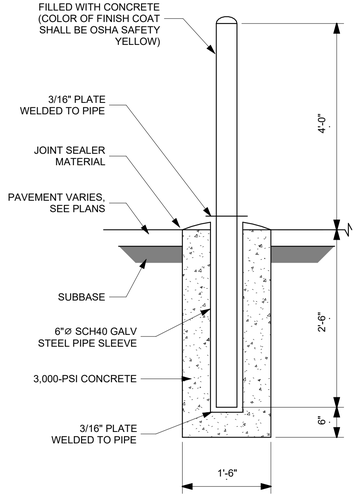

D5 / - - REMOVEABLE BOLLARD DETAILS
N.T.S.

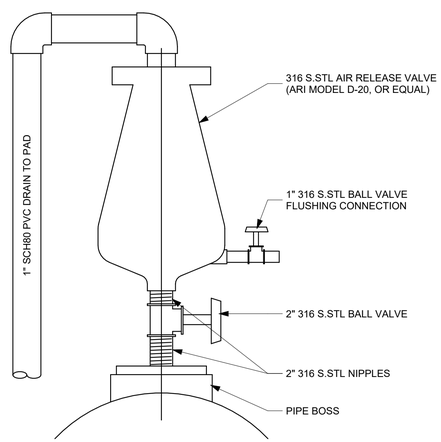

D6 / - - SANITARY SEWER AIR RELEASE VALVE WITH FLUSHING
N.T.S.

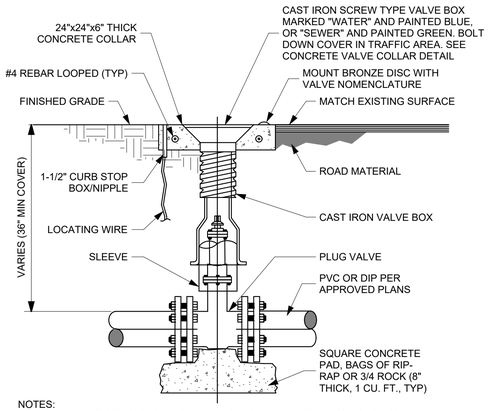

NOTES:
1. WHEN TOP OF OPERATING NUT IS DEEPER THAN 42" A HIGH STRENGTH STEEL EXTENSION WILL BE REQUIRED TO BRING OPERATING NUT 12" BELOW FINISHED GRADE. A STEEL CENTERING PLATE, WELDED TO THE EXTENSION, IS ALSO REQUIRED.
2. COVER SHALL BE PAINTED FEDERAL SAFETY BLUE FOR WATER MAINS AND GREEN FOR SEWER MAINS. BOLT DOWN COVER IN TRAFFIC AREAS.
3. C900 PVC OR DIP RISER PIPE SHALL BE ADDED TO EXTEND THE VALVE BOX.
4. REFLECTIVE PAVEMENT PARKERS (RPM) SHALL BE 6" FROM THE EDGE OF PAVEMENT AS PER DOT INSTALLATION SPECIFICATIONS. WATER RPM'S "BLUE" AND SEWER RPM'S "GREEN."

D7 / - - PLUG VALVE & VALVE BOX
N.T.S.

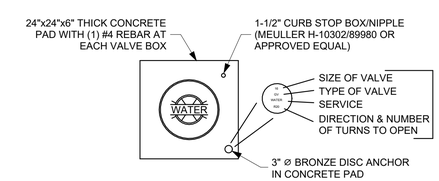

D8 / - - CONCRETE VALVE COLLAR
N.T.S.

CONSTRUCTION DOCUMENTS

No.	REVISIONS	DATE	BY

Kimley»Horn

PROFESSIONAL ENGINEER
KELLY B. SMITH, P.E.
0-64744-1B
U.S. VIRGIN ISLANDS

KHA PROJECT 045826000
DATE JUNE 2026
SCALE: AS SHOWN
DESIGNED BY: KBS
DRAWN BY: RLL
CHECKED BY: MTS

MECHANICAL DETAILS

LBJ SEWERSHED REHABILITATION
PREPARED FOR
VIWMA

SHEET NUMBER
M-17

Autodesk Docs://045826000 St Croix LBJ Pump Station/LBJ Triplex (Submersible at Grade) R2024.rvt
This document, together with the concepts and designs presented herein, as an instrument of service, is intended only for the specific purpose and client for which it was prepared. Reuse of and improper reliance on this document without written authorization and adaptation by Kimley-Horn and Associates, Inc. shall be without liability to Kimley-Horn and Associates, Inc.

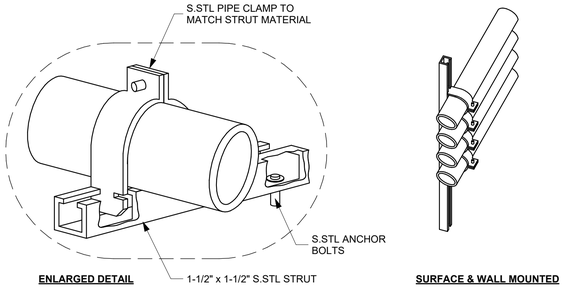

D9 -- UNISTRUT PIPE SUPPORTS
N.T.S.

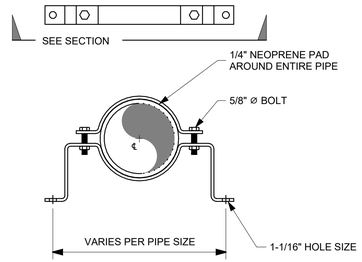

D10 -- WALL PIPE SUPPORT
N.T.S.

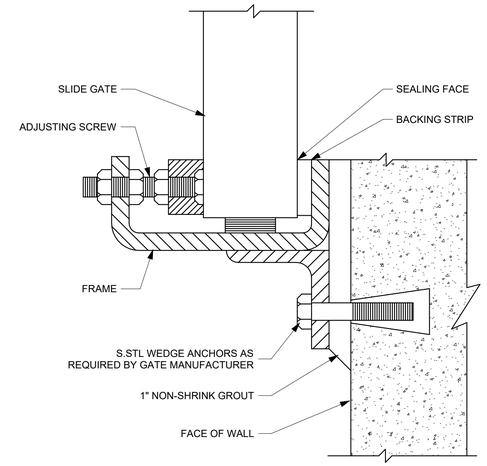

D11 -- WALL MOUNTED GATE SEALING
N.T.S.

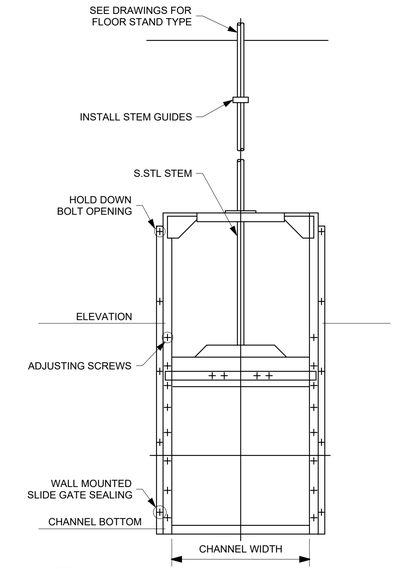

NOTES:
1. GATE TO OPEN TO EXPOSE ENTIRE OPENING
2. REFER TO SPECIFICATIONS FOR GATE SCHEDULE

D12 -- SLIDE GATE - WALL MOUNTED
N.T.S.

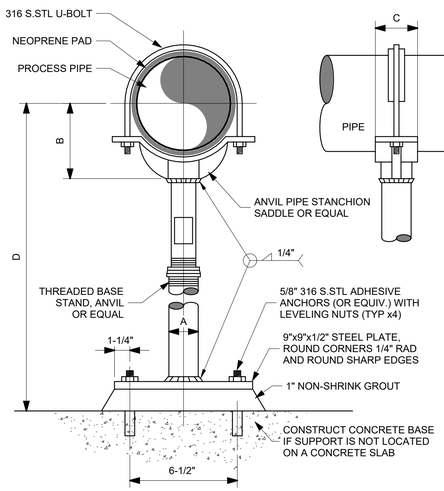

PIPE SIZE	A (NOM)	B	C	D	
				MIN	MAX
4	3	4-3/16	3-5/8	6	60
5	3	4-13/16	3-5/8	6	60
6	3	5-7/16	3-5/8	8	60
8	3	6-15/16	3-5/8	8	60
10	3	8-7/16	3-5/8	10	60
12	3	9-15/16	3-5/8	12	60
14	3	10-1/2	6	6	60
16	3	11-1/2	6	8	60
18	4	13-1/2	6	8	60
20	4	14-1/2	6	10	60
24	4	17-1/2	6	12	60
26	4	18-1/2	6	6	60
30	4	20-5/8	6	8	60
32	4	21-5/8	6	8	60
36	4	23-5/8	6	10	60

* ALL DIMENSIONS IN INCHES

NOTES:
1. HOT-DIP GALVANIZE ENTIRE PIPE SUPPORT AFTER FABRICATION (EXCEPT FOR S.STL FASTENING HARDWARE), OR UNLESS OTHERWISE NOTED IN THE DRAWINGS AND SPECIFICATIONS.
2. SEE PLANS AND SECTIONS FOR PIPE GRADE REQUIREMENT.

D13 -- PIPE SUPPORT - STANCHION SADDLE
N.T.S.

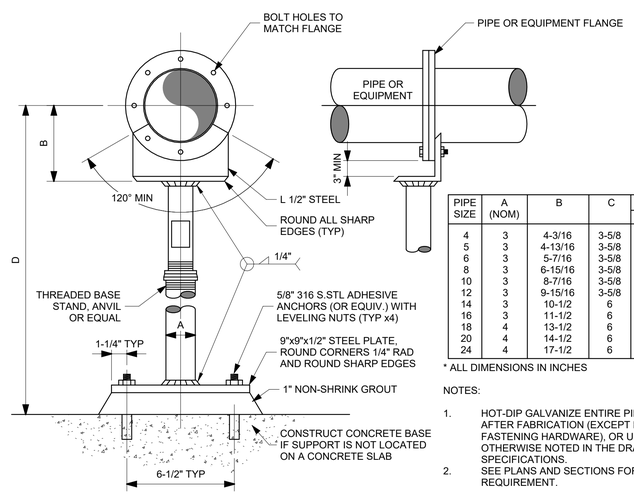

PIPE SIZE	A (NOM)	B	C	D	
				MIN	MAX
4	3	4-3/16	3-5/8	6	60
5	3	4-13/16	3-5/8	6	60
6	3	5-7/16	3-5/8	8	60
8	3	6-15/16	3-5/8	8	60
10	3	8-7/16	3-5/8	10	60
12	3	9-15/16	3-5/8	12	60
14	3	10-1/2	6	6	60
16	3	11-1/2	6	8	60
18	4	13-1/2	6	8	60
20	4	14-1/2	6	10	60
24	4	17-1/2	6	12	60

* ALL DIMENSIONS IN INCHES

NOTES:
1. HOT-DIP GALVANIZE ENTIRE PIPE SUPPORT AFTER FABRICATION (EXCEPT FOR S.STL FASTENING HARDWARE), OR UNLESS OTHERWISE NOTED IN THE DRAWINGS AND SPECIFICATIONS.
2. SEE PLANS AND SECTIONS FOR PIPE GRADE REQUIREMENT.

D14 -- PIPE SUPPORT - STANCHION FLANGE
N.T.S.

CONSTRUCTION DOCUMENTS

No.	REVISIONS	DATE	BY

Kimley»Horn
Sign of Quality

PROFESSIONAL ENGINEER
KELLY B. SMITH, P.E.
0-64744-1B
U.S. VIRGIN ISLANDS

KHA PROJECT 045826000
DATE JUNE 2026
SCALE: AS SHOWN
DESIGNED BY: KBS
DRAWN BY: RLL
CHECKED BY: MTS

MECHANICAL DETAILS

LBJ SEWERSHED REHABILITATION
PREPARED FOR
VIWMA

SHEET NUMBER
M-18

Autodesk Docs://045826000 St Croix LBJ Pump Station/LBJ Triplex (Submersible at Grade) R2024.rvt
This document, together with the concepts and designs presented herein, as an instrument of service, is intended only for the specific purpose and client for which it was prepared. Reuse of and improper reliance on this document without written authorization and adaptation by Kimley-Horn and Associates, Inc. shall be without liability to Kimley-Horn and Associates, Inc.

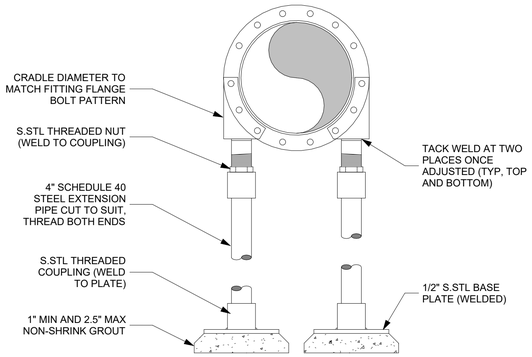

NOTES:

1. ALL MATERIALS AND FASTENERS SHALL BE 304 STAINLESS STEEL.
2. PROVIDE STANDON MODEL S89 OR APPROVED EQUAL.
3. PROVIDE A MINIMUM OF 1" AND MAXIMUM OF 2.5" NON-SHRINK GROUT UNDER SUPPORT PLATE FOR LEVELING. GROUT SHALL BE FORMED AS DETAILED.

PIPE SIZE	FLANGE PLATE	THREADED STUD	BASE PLATE	EXTENSION PIPE
30"	1/2"	2" x 6"	8" x 8" x 1/2"	4" SCH 40
42"	1/2"	2" x 6"	8" x 8" x 1/2"	4" SCH 40
48"	1/2"	2" x 6"	8" x 8" x 1/2"	4" SCH 40

D15 / - -
PIPE SUPPORT - ADJUSTABLE FLANGE (LARGE DIAMETER)
N.T.S.

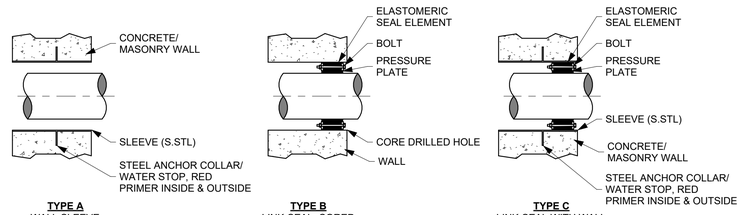

TYPE A
WALL SLEEVE WITH PASSING PIPE

TYPE B
LINK-SEAL, CORED INTO EXISTING WALL

TYPE C
LINK-SEAL WITH WALL SLEEVE CAST-IN-PLACE (SEE MASONRY WALL PENETRATION DETAILS)

NOTES:

1. PENETRATIONS SHALL BE LINK SEAL MODEL S-316 OR EQUAL.
2. WALL SLEEVES SHALL BE SUPPLIED BY THE SAME OR LS-316 MANUACTURER AS THE PENETRATION SEAL.
3. ALL SEAL ELEMENTS SHALL BE EPDM
4. ALL BOLTS & NUTS SHALL BE 316 S.STL
5. COORDINATE WALL PENETRATIOIN DIAMETER WITH PENETRATION SEAL MANUFACTURER AND PIPE O.D.

D16 / - -
LINK SEAL WALL PENETRATION
N.T.S.

CONSTRUCTION DOCUMENTS

No.	REVISIONS	DATE	BY

Kimley»Horn

PROFESSIONAL ENGINEER
KELLY B. SMITH, P.E.
0-64744-1B
U.S. VIRGIN ISLANDS

KHA PROJECT 045826000
DATE JUNE 2026
SCALE: AS SHOWN
DESIGNED BY: KBS
DRAWN BY: RLL
CHECKED BY: MTS

MECHANICAL DETAILS

LBJ SEWERSHED REHABILITATION
PREPARED FOR
VIWMA

SHEET NUMBER
M-19

Autodesk Docs://045826000 St Croix LBJ Pump Station/LBJ Triplex (Submersible at Grade) R2024.rvt
This document, together with the concepts and designs presented herein, as an instrument of service, is intended only for the specific purpose and client for which it was prepared. Reuse of and improper reliance on this document without written authorization and adaptation by Kimley-Horn and Associates, Inc. shall be without liability to Kimley-Horn and Associates, Inc.

NP 3231/735 3~ 480

Patented self cleaning semi-open channel impeller, ideal for pumping in waste water applications. Modular based design with high adaptation grade.

Technical specification

Curves according to: Water, pure Water, pure [100%],39.2 °F,62.428 lb/ft³,1.6889E-5 ft

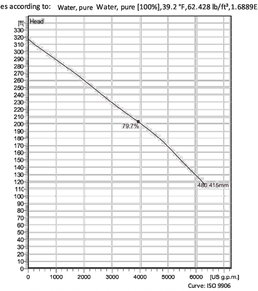

Nominal (mean) data shown. Under- and over-performance from this data should be expected due to standard manufacturing tolerances.
Please consult your local Flygt representative for performance guarantees.

Configuration

Motor number
N0735.000 43-44-4AA-W 250hp

Installation type
P - Semi permanent, Wet

Impeller diameter
415 mm

Discharge diameter
8 inch

Pump information

Impeller diameter
415 mm

Discharge diameter
8 inch

Inlet diameter
250 mm

Maximum operating speed
1785 rpm

Number of blades
3

Max. fluid temperature
40 °C

Material

Impeller
Hard-Iron ™

Project	Xylect-20280405		**Created by**		
Block	0	**Created on**	12/2/2024	**Last update**	12/2/2024

NP 3231/735 3~ 480

Duty Analysis

Curves according to: Water, pure [100%] ; 39.2°F; 62.428lb/ft³; 1.6889E-5ft²/s

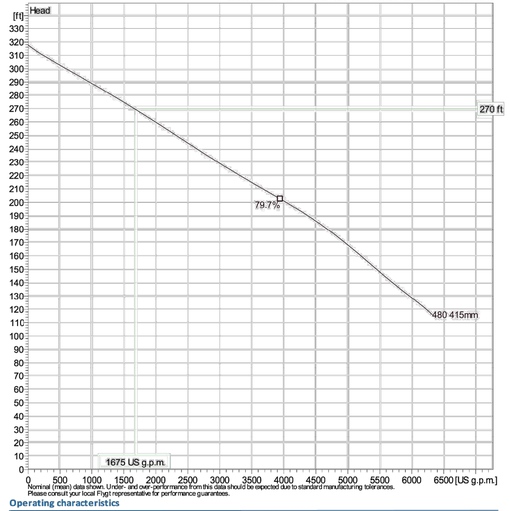

Nominal (mean) data shown. Under- and over-performance from this data should be expected due to standard manufacturing tolerances.
Please consult your local Flygt representative for performance guarantees.

Operating characteristics

Pumps / Systems	Flow	Head	Shaft power	Flow	Head	Shaft power	Hydr.eff.	Spec. Energy	NPSHre
	US g.p.m.	ft	hp	US g.p.m.	ft	hp		kWh/US MG	ft
1	1680	270	188	1680	270	188	60.9 %	1540	15.9

Project			**Created by**		
Block	Xylect-20280405		**Created on**	12/2/2024	**Last update** 12/2/2024

NP 3231/735 3~ 480

Performance curve

Duty point

Flow	Head
1680 US g.p.m.	270 ft

Curves according to: Water, pureWater, pure [100%],39.2 °F,62.428 lb/ft³,1.6889E-5 ft²/s

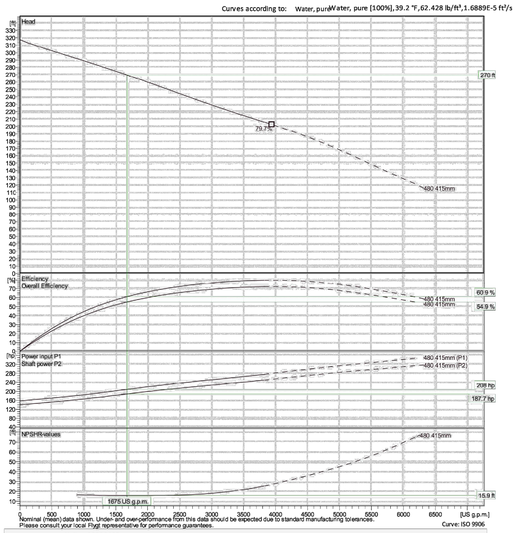

Nominal (mean) data shown. Under- and over-performance from this data should be expected due to standard manufacturing tolerances.
Please consult your local Flygt representative for performance guarantees.

	Xylect-20280405				
	0	**Created on**	12/2/2024	**Last update**	12/2/2024

NP 3231/735 3~ 480

Dimensional drawing

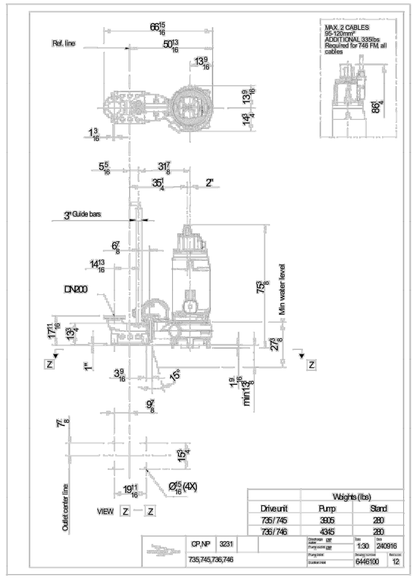

Project	Xylect-20280405		**Created by**		
Block	0	**Created on**	12/2/2024	**Last update**	12/2/2024

SUBMERSIBLE WASTEWATER PUMP DETAILS

SUBMERSIBLE PUMP BASIS OF DESIGN TABLE	
MANUFACTURER/MODEL	FLYGT NP 3231/735
NUMBER OF PUMPS	3 (PER WET WELL)
HORSEPOWER	250
FLOW, AVERAGE	1,675 GPM
HEAD	270-FEET
FLOW, MAXIMUM	6,300 GPM
SHUTOFF HEAD	318-FEET
DISCHARGE DIAMETER	8-INCH

CONSTRUCTION DOCUMENTS

No.	REVISIONS	DATE	BY

Kimley»Horn

EDPT Sign of Quality

PROFESSIONAL ENGINEER
KELLY B. SMITH, P.E.
0-64744-1B
U.S. VIRGIN ISLANDS

KHA PROJECT 045826000
DATE JUNE 2026
SCALE AS SHOWN
DESIGNED BY KBS
DRAWN BY MC
CHECKED BY MTS

SUBMERSIBLE PUMP DETAILS

LBJ PUMP STATION
PREPARED FOR
VIWMA

SHEET NUMBER
M-20

Plotted By:Chaturvedi, Manas Sheet Set:FEC Layout:M-20 SUBMERSIBLE PUMP DETAILS June 24, 2026 01:27:59pm K:\JAX_WaterResources\045826000 - VIWMA LBJ Sewershed\CAD\PlanSheets\M-07 MECHANICAL DETAILS.dwg
This document, together with the concepts and designs presented herein, as an instrument of service, is intended only for the specific purpose and client for which it was prepared. Reuse of and improper reliance on this document without written authorization and adaptation by Kimley-Horn and Associates, Inc. shall be without liability to Kimley-Horn and Associates, Inc.

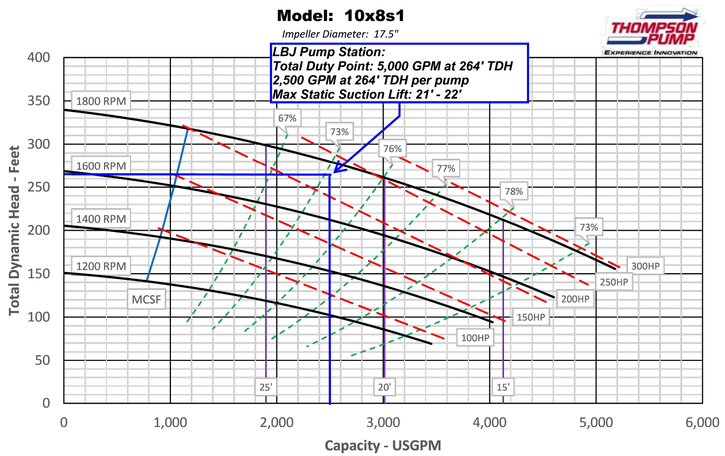

Hydraulic Institute

Test Conditions: Specific Gravity: 1.0 Temperature: 80°F Viscosity: 31.5 SSU Altitude: Sea Level

Tests conducted according to Hydraulic Institute ANSI/HI 14.6 Standard.

Rev: 11/19

DIESEL BYPASS PUMP BASIS OF DESIGN TABLE	
MANUFACTURER/MODEL	THOMPSON 12JSCG
NUMBER OF PUMPS	2
HORSEPOWER	300
FLOW, AVERAGE	2,500 GPM
HEAD	264–FEET
FLOW, MINIMUM	1,200 GPM
HEAD	320–FEET
FLOW, MAXIMUM	5,180 GPM
HEAD	155–FEET
SUCTION LIFT	15–25 FEET
MAX SUCTION LIFT @ DESIGN	21–FEET
DIMENSIONS	13–FEET X 7–FEET
SUCTION DIAMETER	12–INCH
DISCHARGE DIAMETER	12–INCH
DIESEL CAPACITY	500 GALLONS
MAX. FUEL CONSUMPTION	14.5 GAL/HR
MAX. RUNTIME	34 HOURS

FOR REFERENCE ONLY

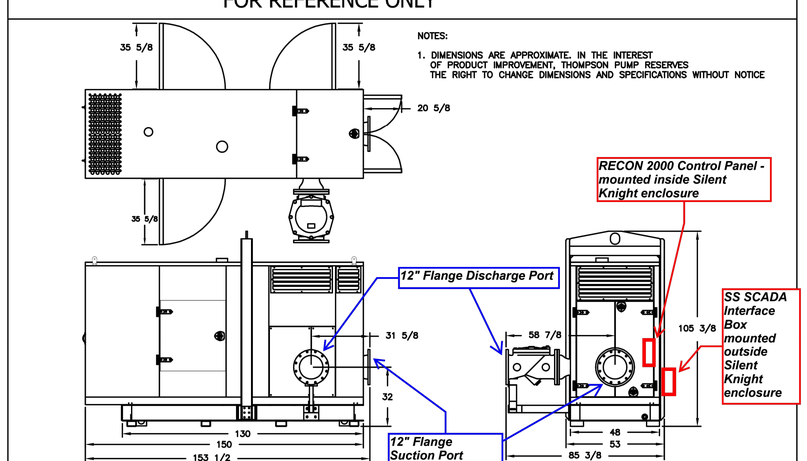

NOTES:

1. DIMENSIONS ARE APPROXIMATE. IN THE INTEREST OF PRODUCT IMPROVEMENT, THOMPSON PUMP RESERVES THE RIGHT TO CHANGE DIMENSIONS AND SPECIFICATIONS WITHOUT NOTICE

DRAWN STIETZEL	DATE 6/27/16	TITLE 12JSCG–DJDS–90H–MC/DC CONCEPTUAL DRAWING	
CHECKED IA	DATE 6/27/16		
APPROVED	DATE		

THOMPSON PUMP — EXPERIENCE INNOVATION

SCALE NONE	DO NOT SCALE DRAWING	
SIZE B	SHEET 1 OF 1	
DRAWING NUMBER C–JSCW08–C75	REV 3	

FOR REFERENCE ONLY

NOTES:

1. LIFT WITH FORKLIFT OR 4–LEG SLING ONLY.
2. DO NOT STACK MORE THAN 2 HIGH (FULL), OR 3 HIGH (EMPTY).

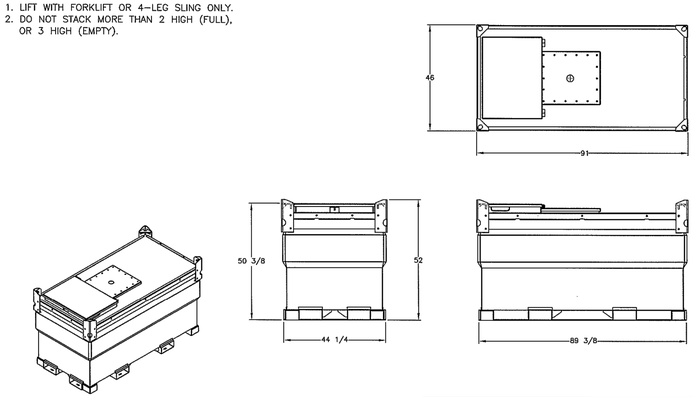

FIND NO	QTY	DWG/PT NO.	NOMENCLATURE
		PARTS LIST (TPM PT. NO. 528–GAL–FT–DW)	

LTR	DESCRIPTION	DATE	BY	CKD	APPRV
REVISIONS					

TITLE 46"X89–3/8" TPM DOUBLE–WALL FUEL CELL		
DRAWN J.BERGLUND	DATE 10/5/16	TOLERANCES UNDIMENSIONED ARE IN INCHES UNLESS OTHERWISE SPECIFIED
CHECKED IA	DATE 9/9/16	XX = +/–.010 XXX = +/–.005 FRACTIONS = +/– 1/32
APPROVED	DATE	MACH'D SURFACE √125 OA

ANGULAR +/– 1° BETWEEN MACHINED SF MACHINED

THOMPSON PUMP — EXPERIENCE INNOVATION

SCALE NONE	DO NOT SCALE DRAWING
SIZE B	SHEET 1 OF 1
DRAWING NUMBER Y121549	REV 1

CONSTRUCTION DOCUMENTS

No.	REVISIONS	DATE	BY

Kimley»Horn

EDT Sign of Quality

PROFESSIONAL ENGINEER — KELLY B. SMITH, P.E. — 0–64744–1B — U.S. VIRGIN ISLANDS

KHA PROJECT 045826000	
DATE JUNE 2026	
SCALE AS SHOWN	
DESIGNED BY KBS	
DRAWN BY MC	
CHECKED BY MTS	

DIESEL BYPASS PUMP DETAILS

LBJ PUMP STATION PREPARED FOR VIWMA

SHEET NUMBER M-21

Plotted By:Chaturvedi, Manas Sheet Set:FEC Layout:M-21 DIESEL BYPASS PUMP DETAILS June 24, 2026 01:28:19pm K:\JAX_WaterResources\045826000 – VIWMA LBJ Sewershed\CAD\PlanSheets\M-08 MECHANICAL DETAILS.dwg
This document, together with the concepts and designs presented herein, as an instrument of service, is intended only for the specific purpose and client for which it was prepared. Reuse of and improper reliance on this document without written authorization and adaptation by Kimley-Horn and Associates, Inc. shall be without liability to Kimley-Horn and Associates, Inc.

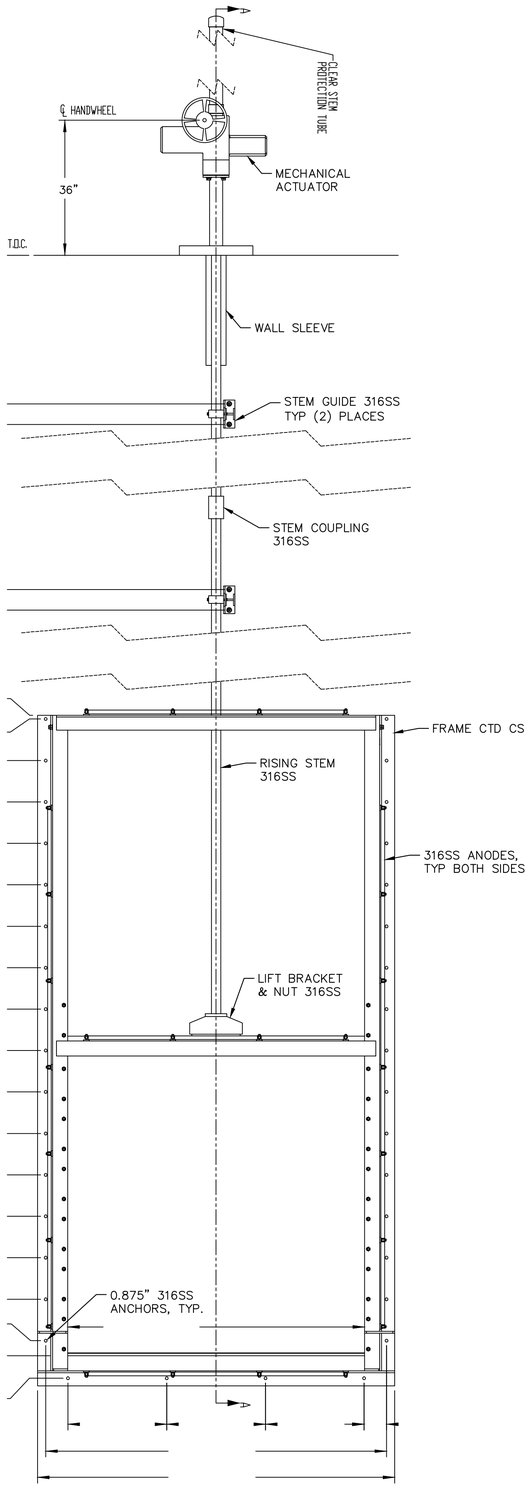

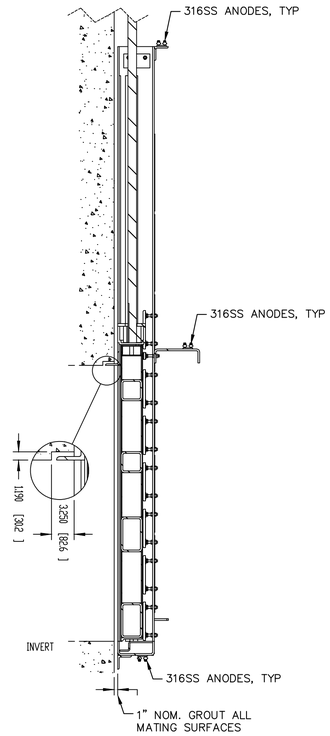

SLIDE GATE SECTION A–A WALL MOUNT DETAIL

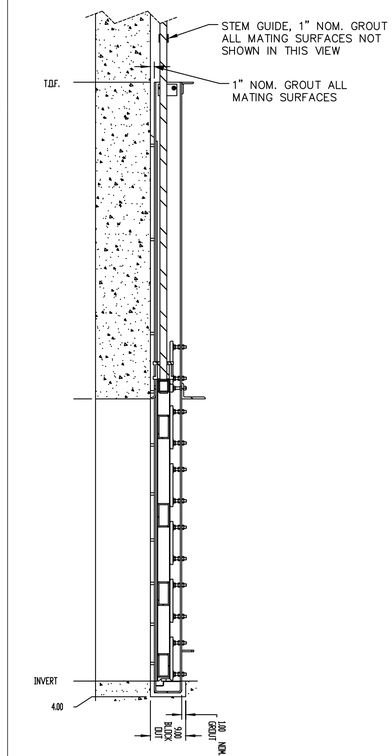

SLIDE GATE SECTION A–A FLOOR MOUNT DETAIL

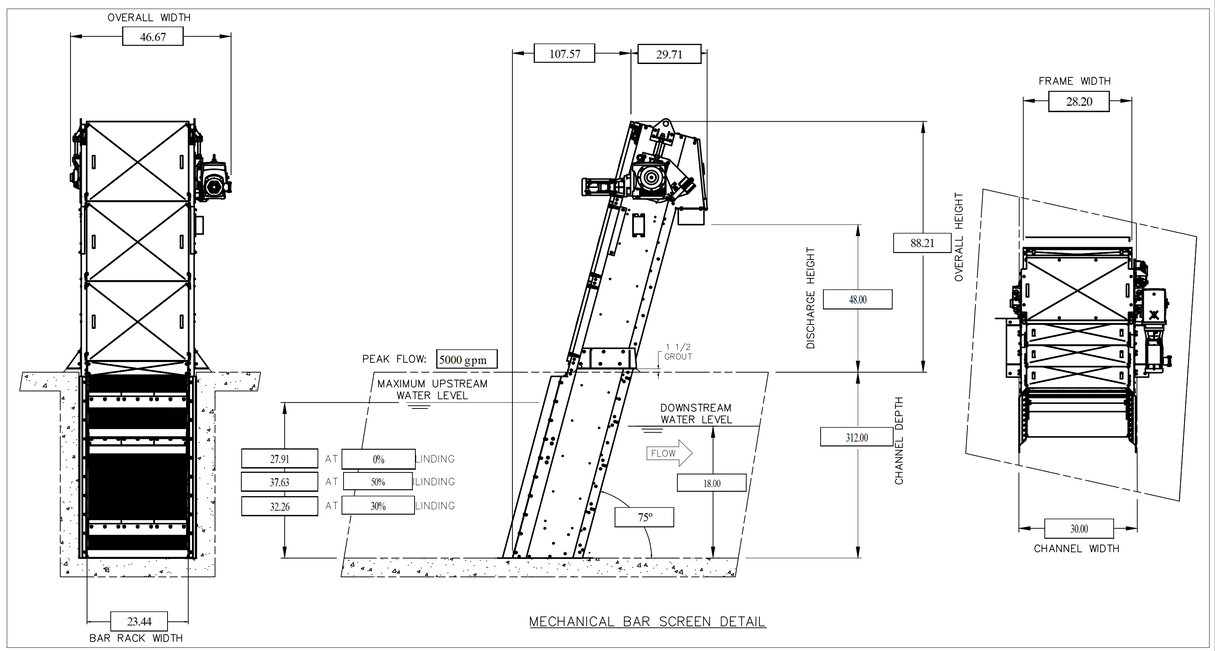

MECHANICAL BAR SCREEN DETAIL

CONSTRUCTION DOCUMENTS

No.	REVISIONS	DATE	BY

Kimley»Horn

EDT Sign of Quality

PROFESSIONAL ENGINEER
KELLY B. SMITH, P.E.
0-64744-1B
U.S. VIRGIN ISLANDS

KHA PROJECT 045826000	
DATE	JUNE 2026
SCALE	AS SHOWN
DESIGNED BY	KBS
DRAWN BY	MC
CHECKED BY	MTS

MECHANICAL EQUIPMENT DETAILS

LBJ PUMP STATION
PREPARED FOR
VIWMA

SHEET NUMBER
M-22

Plotted By:Chaturvedi, Manas Sheet Set:FEC Layout:M-22 MECHANICAL EQUIPMENT DETAILS June 24, 2026 01:28:29pm K:\JAX_WaterResources\045826000 - VIWMA LBJ Sewershed\CAD\PlanSheets\M-15 MECHANICAL EQUIPMENT DETAILS.dwg
This document, together with the concepts and designs presented herein, as an instrument of service, is intended only for the specific purpose and client for which it was prepared. Reuse of and improper reliance on this document without written authorization and adaptation by Kimley-Horn and Associates, Inc. shall be without liability to Kimley-Horn and Associates, Inc.

This document, together with the concepts and designs presented herein, as an instrument of service, is intended only for the specific purpose and client for which it was prepared. Reuse of and improper reliance on this document without written authorization and adaptation by Kimley-Horn and Associates, Inc. shall be without liability to Kimley-Horn and Associates, Inc.

PLAN SYMBOLS

	HOME RUN TO PANELBOARD. NO. OF ARROWS INDICATE NO. OF CIRCUITS, HASH MARKS INDICATE NO. OF #12 AWG. CONDUCTORS. NO HASH MARKS INDICATE 2 #12 CONDUCTORS.
	CONDUIT CONCEALED IN WALL, IN SLAB ABOVE, OR ABOVE CEILING.
	CONDUIT CONCEALED IN OR BELOW FLOOR OR UNDERGROUND.
	CONDUIT RUN EXPOSED. RUN PARALLEL OR PERPENDICULAR TO STRUCTURE OR WALL.
	FLEXIBLE CONDUIT WITH EQUIPMENT CONNECTION.
	CONCRETE ENCASED DUCTBANK.
	EXTERIOR LED LUMINAIRE AND MOUNTING STANDARD.
J	JUNCTION BOX N.E.C. SURFACE MOUNTED UNLESS INDICATED OTHERWISE.
J	JUNCTION BOX PER N.E.C., FLUSH MOUNTED UNLESS INDICATED OTHERWISE.
	FLUSH OR SURFACE MOUNTED LIGHTING PANELBOARD.
	FLUSH OR SURFACE MOUNTED POWER PANELBOARD.
30	DRY TYPE TRANSFORMER. NO. INDICATES KVA RATING.
S P	LIQUID FILLED TYPE TRANSFORMER.
	FLUSH MOUNTED DUPLEX RECEPTACLE WITH USB OUTLET.
	20A, 125V, 3W DUPLEX RECEPTACLE IN FLUSH OUTLET BOX, 18" ABOVE FINISHED FLOOR.
	20A, 125V, 3W DUPLEX GFI RECEPTACLE IN FLUSH OUTLET BOX MOUNTED 18" ABOVE FINISHED FLOOR.
	20A, 125V, 3W DUPLEX RECEPTACLE, SURFACE MOUNTED.
WP	SURFACE MOUNTED GROUND FAULT DUPLEX WEATHERPROOF RECEPTACLE WITH COVER RATED NEMA 4 WHILE IN USE 20A, 125V, 3W – MOUNTED 18" ABOVE FINISHED FLOOR.
WP	FLUSH MOUNTED GROUND FAULT DUPLEX WEATHERPROOF RECEPTACLE WITH WP COVER RATED NEMA 4 WHILE IN USE MOUNTED 18" ABOVE FINISHED FLOOR.
S	SINGLE POLE SWITCH WITH PILOT LIGHT IN FLUSH OUTLET BOX, 48" ABOVE FINISHED FLOOR, UNLESS OTHERWISE NOTED (TYPICAL). *SUBSCRIPT "M" DENOTES OCCUPANCY SENSOR SWITCH WITH ON/OFF OVERRIDE.
S	SINGLE POLE SWITCH, WITH PILOT LIGHT SURFACE MOUNTED.
S_3	THREE-WAY SWITCH IN FLUSH OUTLET BOX.
S_4	FOUR-WAY SWITCH IN FLUSH OUTLET BOX.
	NON-FUSIBLE DISCONNECT SWITCH, 30A,3P UNLESS OTHERWISE INDICATED.
	NON-FUSIBLE DISCONNECT SWITCH, 30A,3P UNLESS OTHERWISE INDICATED, WITH REMOTE CONTROL STATION AS REQUIRED BY ELEMENTARY DIAGRAMS OR SPECS.
75	ELECTRIC A.C. MOTOR, NO. INDICATES HORSEPOWER.
P	POWER MANHOLE, SEE DETAIL.
C	CONTROL PULLBOX, SEE DETAIL.
VFD	VARIABLE FREQUENCY DRIVE.
T	THERMOSTAT.

PLAN SYMBOLS (CONTINUED)

	ELECTRIC HEATER.
AE	ANALYZING ELEMENT.
AIT	ANALYZING INDICATING TRANSMITTER.
TW	GROUND TEST WELL
	GROUND ROD
O/R	OFF/REMOTE
FS	FLOW SWITCH
LE	LEVEL ELEMENT
LIT	LEVEL INDICATING TRANSMITTER
TS	TEMPERATURE SWITCH
SF	SEAL FAIL
PS	PRESSURE SWITCH
FE	FLOW ELEMENT
FIT	FLOW INDICATING TRANSMITTER
TC	TERMINATION CABINET WITH COPPER LUGS IN NEMA 4X 316 SS ENCLOSURE
SH	SPACE HEATER
SV	SOLENOID VALVE
M	MOTORIZED VALVE
LLS	LIQUID LEVEL SWITCH
DPS	DIFFERENTIAL PRESSURE SWITCH
LCP	LOCAL CONTROL PANEL
PT	PRESSURE TRANSMITTER
N/A	NON AUTOMATIC
PSH	HIGH PRESSURE SWITCH
PSL	LOW PRESSURE SWITCH
XS	TORQUE SWITCH
LS	LIMIT SWITCH
PIT	PRESSURE INDICATING TRANSMITTER
PT	LEVEL PRESSURE TRANSDUCER

SINGLE LINE DIAGRAM SYMBOLS

	COMBINATION MOTOR STARTER
ST	SHUNT TRIP
	FUSE
	CAPACITOR
	MOLDED CASE CIRCUIT BREAKER
	TYPICAL SELECTOR SWITCH AND CONTROL. SEE ELEMENTARY DIAGRAMS FOR EXACT TYPE.
75	ELECTRIC A.C. MOTOR, NO. INDICATES HORSEPOWER.
	SERVICE OR EQUIPMENT GROUND.
	NON-FUSIBLE DISCONNECT SWITCH, 30A,3P UNLESS OTHERWISE INDICATED.
	NON-FUSIBLE DISCONNECT SWITCH, 30A,3P UNLESS OTHERWISE INDICATED, WITH REMOTE CONTROL STATION AS REQUIRED BY ELEMENTARY DIAGRAMS OR SPECS.
	120/208V PANELBOARD
	480V PANELBOARD.
	CURRENT TRANSFORMERS
	POTENTIAL TRANSFORMERS.
SH	SPACE HEATER
TS	TEMPERATURE
	CROUSE HINDS EYSR FITTING. FILLED WITH CHICO CEMENT
	CROUSE HINDS EYS FITTING. FILLED WITH CHICO CEMENT
AF	ARC FLASH
EPO	EMERGENCY POWER OFF
K	KEY INTERLOCK
LCP	LOCAL CONTROL PANEL
TC	TERMINATION CABINET. NEMA 4X 316 SS UNLESS OTHERWISE NOTED
JB	JUNCTION BOX. NEMA 4X 316 SS UNLESS OTHERWISE NOTED
	FVNR STARTER SYMBOL
	FVR STARTER SYMBOL
TT	TEMPERATURE TRANSMITTER

CONTROL DIAGRAM SYMBOLS

	NORMALLY OPEN CONTACT
	NORMALLY CLOSED CONTACT
	LIMIT SWITCH, NORMALLY OPEN
	LIMIT SWITCH, NORMALLY CLOSED
	PRESSURE SWITCH, NORMALLY OPEN
	PRESSURE SWITCH, NORMALLY CLOSED
	FLOAT SWITCH, NORMALLY OPEN
	FLOAT SWITCH, NORMALLY CLOSED
	FLOW SWITCH, NORMALLY OPEN
	FLOW SWITCH, NORMALLY CLOSED
	TEMPERATURE SWITCH, NORMALLY OPEN
	TEMPERATURE SWITCH, NORMALLY CLOSED
	NORMALLY OPEN, TIMED TO CLOSE CONTACT
	NORMALLY CLOSED, TIMED TO OPEN CONTACT
	NORMALLY CLOSED, TIMED TO CLOSE CONTACT
	NORMALLY OPEN, TIMED TO OPEN CONTACT
AR	ALARM RELAY
AT	ALARM TIMER
CR	CONTROL RELAY
M	MOTOR STARTER
MC	MOTOR CALL
TR	TIMING RELAY
A	ALARM INDICATING LIGHT
R	RUN INDICATING LIGHT
	MOMENTARY CONTACT PUSHBUTTON
	MOMENTARY BREAK PUSHBUTTON OR RESET
K	KEYED SWITCH
	MAINTAINED CONTACT ON-OFF SWITCH
	START/STOP(S/S) CONTROL SWITCH MAINTAINED CONTACT
	THREE POSITION MAINTAINED CONTACT SELECTOR SWITCH
	FUSE
	MOLDED CASE CIRCUIT BREAKER
	CONTROL POWER TRANSFORMER
	REMOTE TERMINAL BLOCK POINT

ABBREVIATIONS

A	AMPERES
AIC	AMPS INTERRUPTING CURRENT
ATS	AUTOMATIC TRANSFER SWITCH
BUCP	BACKUP CONTROL PANEL
BKR	BREAKER
BLDG	BUILDING
CPT	CONTROL POWER TRANSFORMER
CU	COPPER
CT	CURRENT TRANSFORMER
DH	DATA HIGHWAY
DISC	DISCONNECT
DO	DISSOLVED OXYGEN
EAP	EYEWASH ALARM PANEL
EB	ELECTRICAL BUILDING
EDP	EMERGENCY DISTRIBUTION PANEL
EF	EXHAUST FAN
EQ	EQUALIZATION
ETM	ELAPSED TIME METER
EXH	EXHAUST
EXIST	EXISTING
FPP	FIBER PATCH PANEL
FVNR	FULL VOLTAGE NON-REVERSING
FVR	FULL VOLTAGE REVERSING
GCP	GENERATOR CONTROL PANEL
GEN	GENERATOR
GFR	GROUND FAULT RECEPTACLE
GFI	GROUND FAULT INTERRUPTER
GIP	GENERATOR INTERFACE PANEL
GND	GROUND
GSCP	GRIT SYSTEM CONTROL PANEL
HMI	HUMAN MACHINE INTERFACE
HP	HORSEPOWER
IPS	INFLUENT PUMP STATION
KVA	KILO VOLT-AMPERES
KW	KILOWATT
LCP	LOCAL CONTROL PANEL
LP	LOOP
LSCP	LIFT STATION CONTROL PANEL
LTG	LIGHTING
MAX	MAXIMUM
MCB	MAIN CIRCUIT BREAKER
MCC	MOTOR CONTROL CENTER
MSC	MANUFACTURER SUPPLIED CABLE
MIN	MINIMUM
MLO	MAIN LUGS ONLY
MPZ	MINI POWER ZONE
MTD	MOUNTED
MTS	MANUAL TRANSFER SWITCH
NEC	NATIONAL ELECTRICAL CODE
N	NEUTRAL
NIP	NETWORK INTERFACE PANEL
NTS	NOT TO SCALE
OCP	ODOR CONTROL PANEL
OF	OUTPUT FILTER
OH	OVERHEAD
P	POLE
PCP	PROCESS CONTROL PANEL
PM	PHASE MONITOR
PMP	PRESSURE MONITORING PANEL
PVC	POLYVINYL CHLORIDE
RAS	RETURN ACTIVATED SLUDGE
RECPT	RECEPTACLE
RCP	REMOTE CONTROL PANEL
RWF-75	75 GPM RAINWATER FILTRATION SKID
RIO	REMOTE I/O PANEL
RTO	RETURN TO OWNER
SH	SHIELDED
SIP	SECURITY INTERFACE PANEL
SLD	SINGLE LINE DIAGRAM
SNR	SERVER NETWORK RACK
SPD	SURGE PROTECTION DEVICE
SS	STAINLESS STEEL
SSS	SOLID STATE STARTER
STR	STARTER
SW	SWITCH
TC	TERMINATION CABINET
TYP	TYPICAL
TBR	TO BE REMOVED
V	VOLT
VFD	VARIABLE FREQUENCY DRIVE
W	WATT
WP	WEATHERPROOF
WRF	WATER RECLAMATION FACILITY
w/	WITH
XFMR	TRANSFORMER
ø	PHASE

NOTES

1. ALL WORK SHALL BE DONE IN ACCORDANCE WITH THE 2020 FLORIDA BUILDING CODE, THE 2020 NATIONAL ELECTRICAL CODE, 2020 NFPA 820, AND ALL LOCAL RULES.
2. THE PLANS REFLECT SYSTEM VOLTAGE DROPS AS PER F.B.C. ENERGY CONSERVATION 2020, SIXTH C405.6.3 FEEDER CONDUCTORS ARE SIZED FOR A MAXIMUM VOLTAGE DROP OF 2 PERCENT AT DESIGN LOAD. BRANCH CIRCUIT CONDUCTORS ARE SIZED FOR A MAXIMUM VOLTAGE DROP OF 3 PERCENT AT DESIGN LOAD.
3. ELECTRICAL CONTRACTOR SHALL SUPPLY AND INSTALL ALL NEW ELECTRICAL WORK INDICATED.
4. ELECTRICAL CONTRACTOR SHALL VISIT JOB SITE AND FAMILIARIZE HIMSELF WITH ALL CONDITIONS AFFECTING ELECTRICAL INSTALLATION AND MAKE PROVISIONS AS TO THE COST THEREOF. EXISTING CONDITIONS OF ELECTRICAL EQUIPMENT, LIGHT FIXTURES, ETC... THAT ARE PART OF THE FINAL SYSTEM SHALL BE VERIFIED BY THE CONTRACTOR PRIOR TO SUBMITTING HIS BID.
5. MINIMUM WIRE SIZE SHALL BE #12 A.W.G. EXCLUDING CONTROL WIRING, UNLESS OTHERWISE NOTED.
6. IT IS NOT THE INTENT OF THESE PLANS TO SHOW EVERY MINOR DETAIL OF CONSTRUCTION. THE CONTRACTOR IS EXPECTED TO FURNISH AND INSTALL ALL ITEMS FOR A COMPLETE ELECTRICAL SYSTEM AND PROVIDE ALL REQUIREMENTS NECESSARY FOR THE EQUIPMENT TO BE PLACED IN PROPER WORKING ORDER.
7. ELECTRICAL SYSTEM SHALL BE COMPLETE AND EFFECTIVELY GROUNDED AS REQUIRED BY THE N.E.C. 2020 EDITION OR LOCAL CODES. ALL CONDUITS SHALL HAVE A BOND WIRE SIZED PER TABLE 250-122 OF THE 2020 NATIONAL ELECTRICAL CODE.
8. ALL MATERIALS SHALL BE NEW AND BEAR UNDERWRITERS' LABELS WHERE APPLICABLE.
9. ALL WORK SHALL BE PERFORMED BY A LICENSED ELECTRICAL CONTRACTOR IN A FIRST CLASS WORKMANLIKE MANNER. THE COMPLETED SYSTEM SHALL BE FULLY OPERATIVE AND ACCEPTED BY ENGINEER/OWNER.
10. CONTRACTOR SHALL GUARANTEE ALL MATERIALS AND WORKMANSHIP FREE FROM DEFECTS FOR A PERIOD OF NOT LESS THAN TWO YEARS FROM DATE OF ACCEPTANCE.
11. CORRECTION OF ANY DEFECTS SHALL BE COMPLETED WITHOUT ADDITIONAL CHARGE AND SHALL INCLUDE REPLACEMENT OR REPAIR OF ANY OTHER PHASE OF THE INSTALLATION WHICH MAY HAVE BEEN DAMAGED.
12. CONTRACTOR SHALL BE RESPONSIBLE FOR ALL CUTTING AND PATCHING REQUIRED OF HIS WORK.
13. ELECTRICAL CONTRACTOR SHALL LABEL ALL PANELS W/ TYPED WRITTEN DIRECTORIES (NEW & EXISTING).
14. ALL ELECTRICAL WIRING SHALL BE THE RESPONSIBILITY OF THE ELECTRICAL CONTRACTOR.
15. DO NOT SCALE THE ELECTRICAL DRAWINGS. REFER TO THE MECHANICAL DRAWINGS & THE APPROVED MANUFACTURER'S SHOP DRAWINGS FOR THE EXACT LOCATION OF ALL EQUIPMENT.
16. NON-SHADED TEXT DENOTES NEW EQUIPMENT, STRUCTURES AND WORK. *SHADED AND SLANTED* TEXT DENOTES EXISTING EQUIPMENT OR STRUCTURES.
17. ALL CONTROL PANELS SHALL BE UL LISTED AND SHALL COMPLY WITH ARTICLE 409 OF THE NEC.
18. ALL EMPTY CONDUITS SHALL BE INSTALLED WITH PULLSTRING.

CONSTRUCTION DOCUMENTS

10620 GRIFFIN ROAD, SUITE 202
COOPER CITY, FLORIDA 33328
PHONE: (954) 448-7930
C.O.A. NO. 6783
Stephen E. Bailey, P.E.
Florida P.E. No. 42461

No.	REVISIONS	DATE	BY

Kimley»Horn
EDT Sign of Quality

PROFESSIONAL ENGINEER
STEPHEN E. BAILEY
2122-E
U.S. VIRGIN ISLANDS

KHA PROJECT 045826000	
DATE	JUNE 2026
SCALE	AS SHOWN
DESIGNED BY	JPL
DRAWN BY	FAD
CHECKED BY	SEB

ELECTRICAL NOTES, SYMBOLS & ABBREVIATIONS

LBJ PUMP STATION
PREPARED FOR
VIWMA

SHEET NUMBER
E-01

X:\Active Projects\Kimley Horn\Virgin Islands\06_ 100% Redesign\Dwgs\E-01 NOTES.dwg, 6/29/2026 4:03:44 PM, mthompson

This document, together with the concepts and designs presented herein, as an instrument of service, is intended only for the specific purpose and client for which it was prepared. Reuse of and improper reliance on this document without written authorization and adaptation by Kimley-Horn and Associates, Inc. shall be without liability to Kimley-Horn and Associates, Inc.

X:\Active Projects\Kimley Horn\Virgin Islands\05_100% Redesign\Dwgs\E-02 ELEC SITE PLAN.dwg, 6/29/2026 3:59:14 PM, mthompson

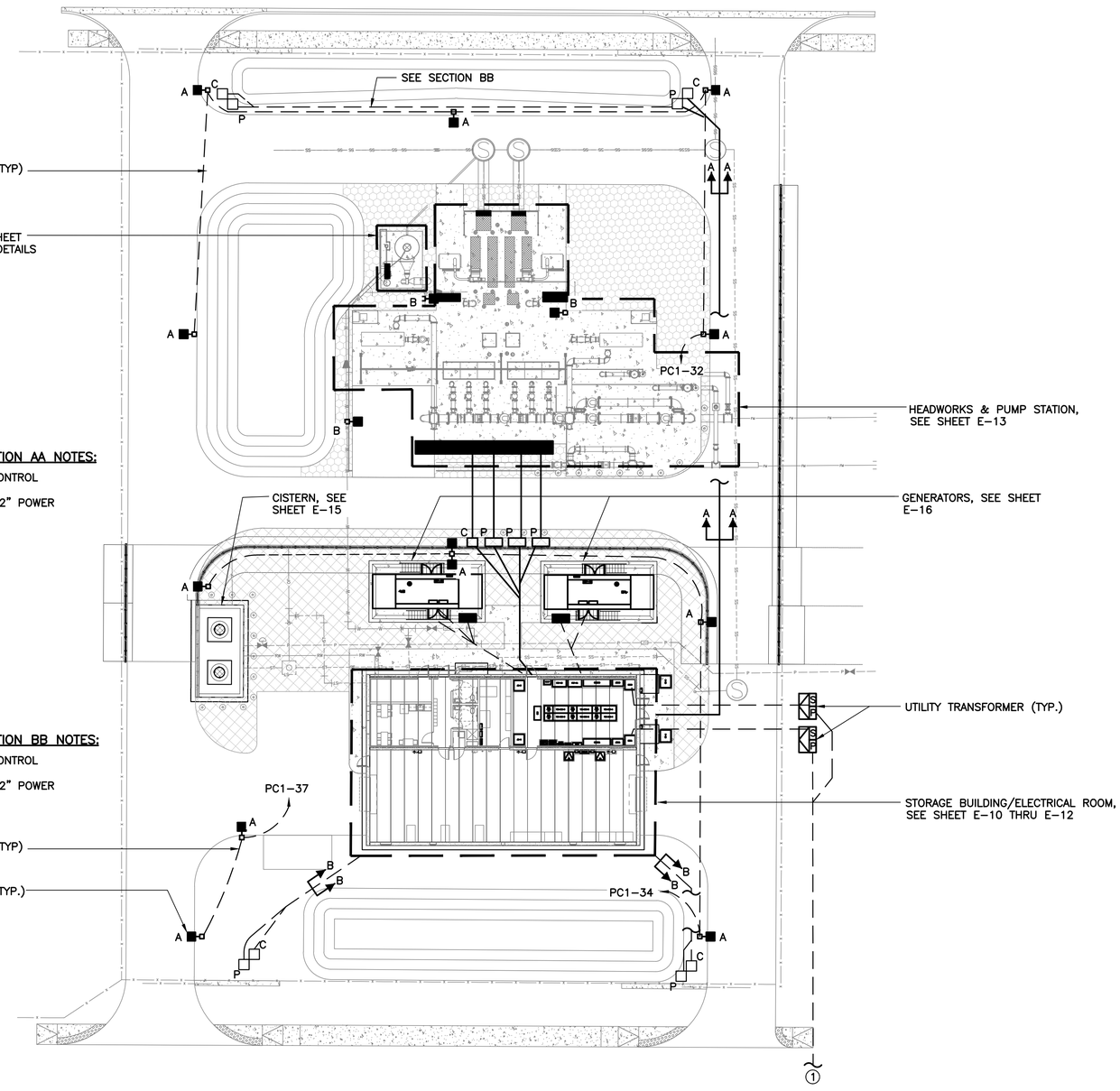

ELECTRICAL SITE PLAN

GRAPHIC SCALE IN FEET
0 10 20 40

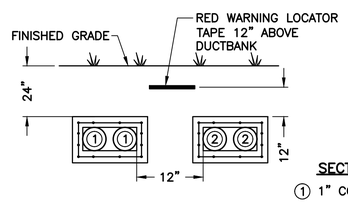

DUCTBANK SECTION AA
N.T.S.

SECTION AA NOTES:

1. 1" CONTROL
2. 1 1/2" POWER

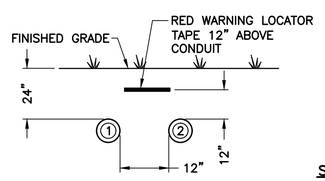

CONDUIT SECTION BB
N.T.S.

SECTION BB NOTES:

1. 1" CONTROL
2. 1 1/2" POWER

NOTES:

1. TO 13KV UTILITY SERVICE POINT. (TYP,2)
2. DESIGN OF ELECTRICAL DUCTBANKS AND CONDUIT SECTIONS SHALL BE RESPONSIBILITY OF CONTRACTOR PER SPEC SECTION 26 05 00, 1.14, IN ADDITION TO SECTIONS PROVIDED ON THIS SHEET, REFER TO SINGLE LINES, CONTROL RISER DIAGRAMS AND PANEL SCHEDULES FOR CONDUIT/WIRE REQUIREMENTS. CONDUITS WITH 480V POWER CIRCUITS SHALL BE LOCATED TO OUTSIDE ON DUCTBANK/CONDUIT SECTION. EMPTY CONDUITS SHALL BE LOCATED AT TOP OF CONDUIT/DUCTBANK SECTION.

CONSTRUCTION DOCUMENTS

10620 GRIFFIN ROAD, SUITE 202
COOPER CITY, FLORIDA 33328
PHONE: (954) 448-7930
C.O.A. NO. 6783
Stephen E. Bailey, P.E.
Florida P.E. No. 42461

No.	REVISIONS	DATE	BY

Kimley»Horn

PROFESSIONAL ENGINEER
STEPHEN E. BAILEY
2122-E
U.S. VIRGIN ISLANDS

KHA PROJECT 045826000
DATE JUNE 2026
SCALE AS SHOWN
DESIGNED BY JPL
DRAWN BY FAD
CHECKED BY SEB

ELECTRICAL SITE PLAN

LBJ PUMP STATION PREPARED FOR VIWMA

SHEET NUMBER
E-02

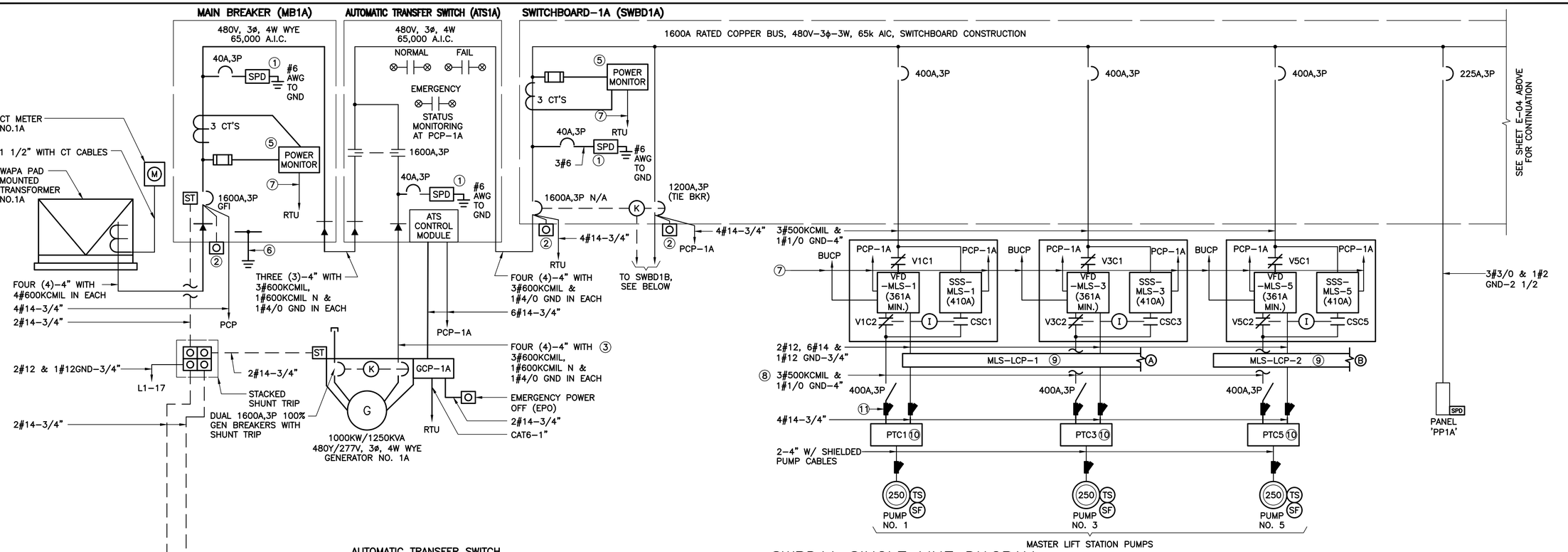

SWBD1A SINGLE LINE DIAGRAM

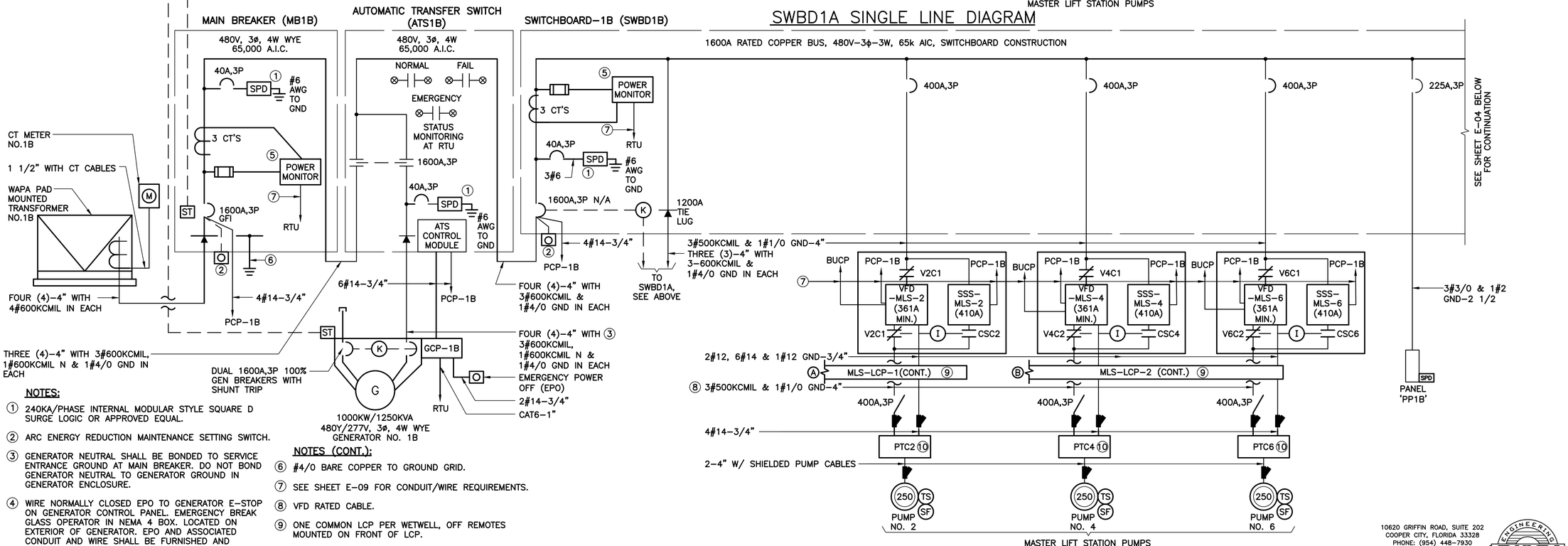

SWBD1B SINGLE LINE DIAGRAM

NOTES:

1. 240KA/PHASE INTERNAL MODULAR STYLE SQUARE D SURGE LOGIC OR APPROVED EQUAL.
2. ARC ENERGY REDUCTION MAINTENANCE SETTING SWITCH.
3. GENERATOR NEUTRAL SHALL BE BONDED TO SERVICE ENTRANCE GROUND AT MAIN BREAKER. DO NOT BOND GENERATOR NEUTRAL TO GENERATOR GROUND IN GENERATOR ENCLOSURE.
4. WIRE NORMALLY CLOSED EPO TO GENERATOR E–STOP ON GENERATOR CONTROL PANEL. EMERGENCY BREAK GLASS OPERATOR IN NEMA 4 BOX. LOCATED ON EXTERIOR OF GENERATOR. EPO AND ASSOCIATED CONDUIT AND WIRE SHALL BE FURNISHED AND INSTALLED BY GENERATOR SUPPLIER.
5. POWER MONITOR WITH ETHERNET/IP COMMUNICATIONS CARD, SQUARE D PM5500 SERIES.

NOTES (CONT.):

6. #4/0 BARE COPPER TO GROUND GRID.
7. SEE SHEET E–09 FOR CONDUIT/WIRE REQUIREMENTS.
8. VFD RATED CABLE.
9. ONE COMMON LCP PER WETWELL, OFF REMOTES MOUNTED ON FRONT OF LCP.
10. NEMA 4X 316 SS.
11. CROUSE HINDS EYS FITTING WITH CHICO CEMENT. (TYP.)

CONSTRUCTION DOCUMENTS

10620 GRIFFIN ROAD, SUITE 202
COOPER CITY, FLORIDA 33328
PHONE: (954) 448–7930
C.O.A. NO. 6783
Stephen E. Bailey, P.E.
Florida P.E. No. 42461

No.	REVISIONS	DATE	BY

Kimley»Horn

PROFESSIONAL ENGINEER
STEPHEN E. BAILEY
2122–E
U.S. VIRGIN ISLANDS

KHA PROJECT 045826000	
DATE	JUNE 2026
SCALE	AS SHOWN
DESIGNED BY	JPL
DRAWN BY	FAD
CHECKED BY	SEB

SWBD1A & SWBD1B SINGLE LINE DIAGRAM

LBJ PUMP STATION
PREPARED FOR
VIWMA

SHEET NUMBER
E-03

This document, together with the concepts and designs presented herein, as an instrument of service, is intended only for the specific purpose and client for which it was prepared. Reuse of and improper reliance on this document without written authorization and adaptation by Kimley-Horn and Associates, Inc. shall be without liability to Kimley-Horn and Associates, Inc.

X:\Active Projects\Kimley Horn\Virgin Islands\06_ 100% Redesign\Dwgs\E-03 SWBD1A & SWBD1B SLD-1.dwg, 6/29/2026 4:04:45 PM, mthompson

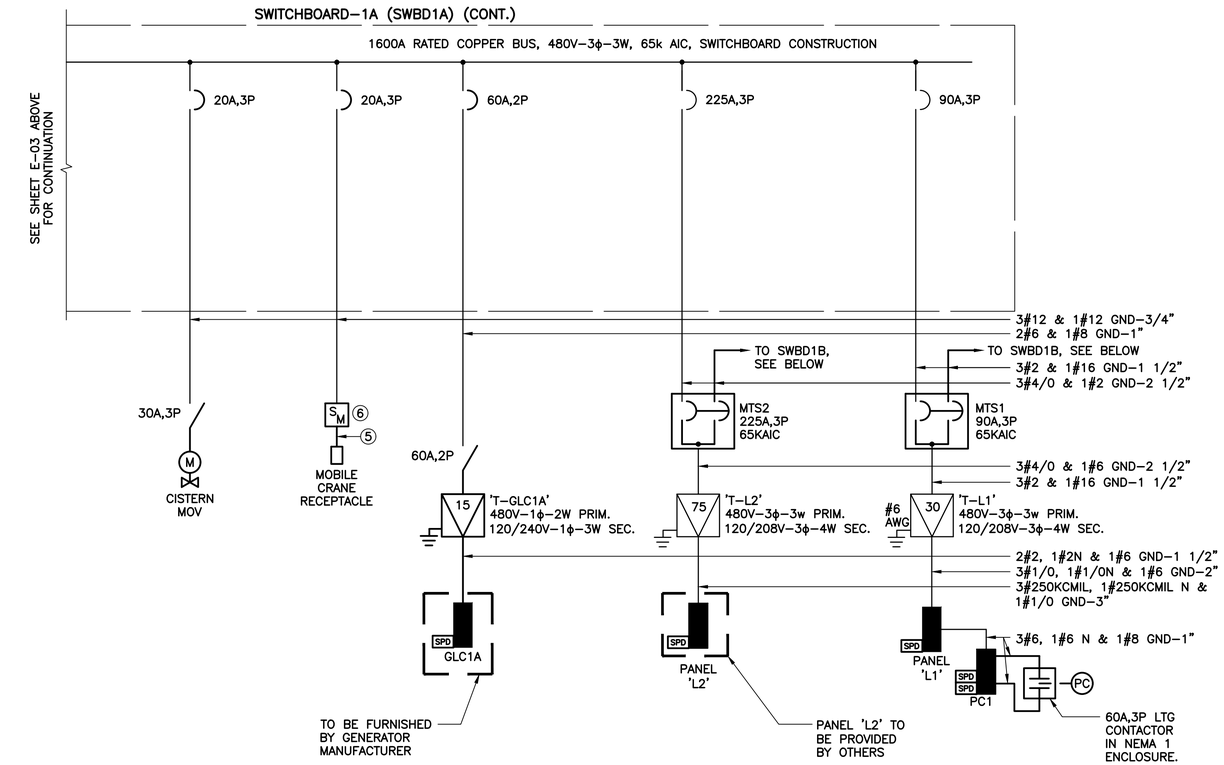

SWBD1A SINGLE LINE DIAGRAM (CONT.)

NOTES:

1. CROUSE HINDS EYS FITTING WITH CHICO CEMENT. (TYP.)
2. VFD RATED CABLE.
3. ONE COMMON LCP PER WETWELL, OFF REMOTES MOUNTED ON FRONT OF LCP.
4. SEE SHEET E–09 FOR CONDUIT/WIRE REQUIREMENTS.
5. 3#12 & 1#12 GND–3/4".
6. 30A,3P MANUAL MOTOR RATED SWITCH.
7. NEMA 4X 316 SS.
8. 2#6 & 1#8 GND–1".

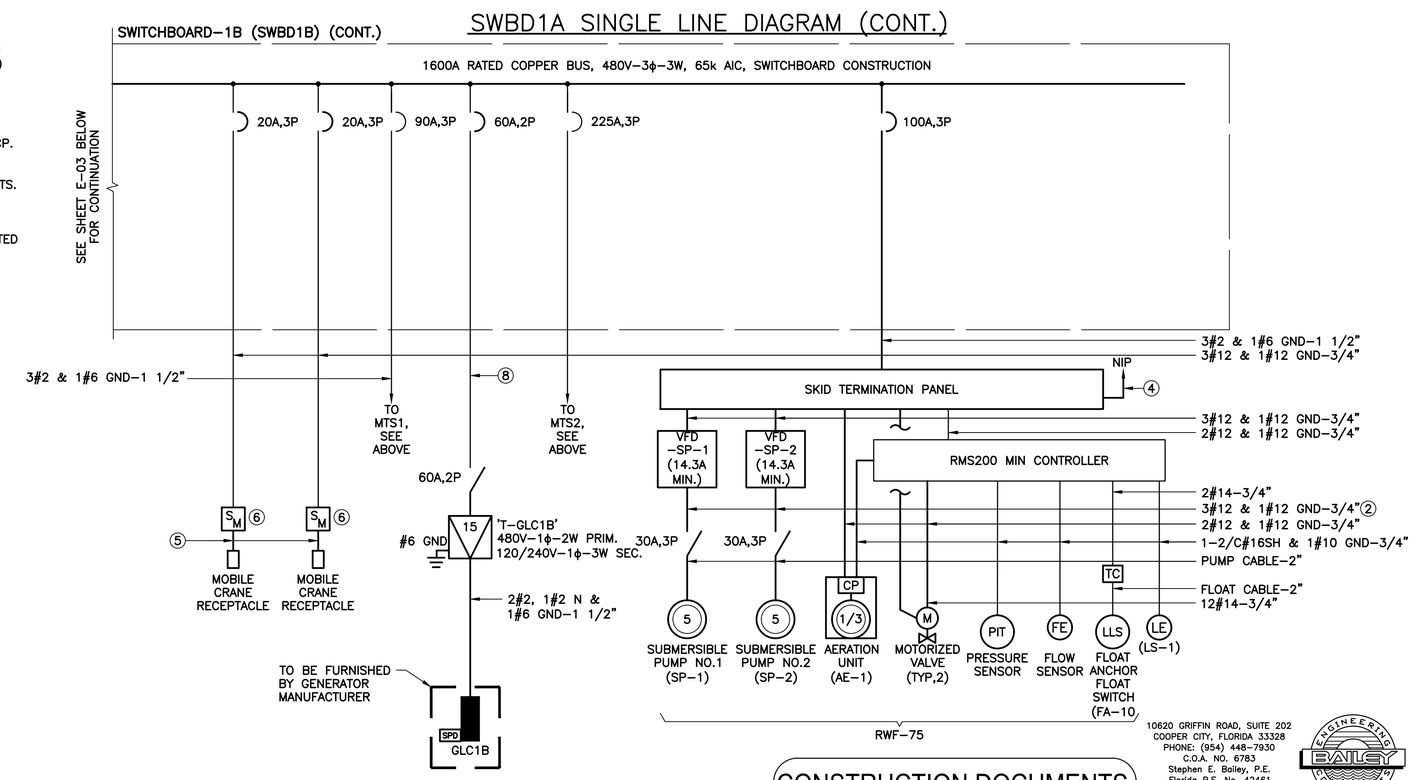

SWBD1B SINGLE LINE DIAGRAM (CONT.)

CONSTRUCTION DOCUMENTS

10620 GRIFFIN ROAD, SUITE 202
COOPER CITY, FLORIDA 33328
PHONE: (954) 448–7930
C.O.A. NO. 6783
Stephen E. Bailey, P.E.
Florida P.E. No. 42461

No.	REVISIONS	DATE	BY

Kimley»Horn

PROFESSIONAL ENGINEER STEPHEN E. BAILEY 2122–E U.S. VIRGIN ISLANDS

KHA PROJECT 045826000	
DATE	JUNE 2026
SCALE	AS SHOWN
DESIGNED BY	JPL
DRAWN BY	FAD
CHECKED BY	SEB

SWBD1A & SWBD1B SINGLE LINE DIAGRAM (CONT.)

LBJ PUMP STATION
PREPARED FOR
VIWMA

SHEET NUMBER
E-04

This document, together with the concepts and designs presented herein, as an instrument of service, is intended only for the specific purpose and client for which it was prepared. Reuse of and improper reliance on this document without written authorization and adaptation by Kimley-Horn and Associates, Inc. shall be without liability to Kimley-Horn and Associates, Inc.

X:\Active Projects\Kimley Horn\Virgin Islands\06_100% Redesign\Dwgs\E-04 SWBD1A & SWBD1B SLD-2.dwg, 6/29/2026 4:05:32 PM, mthompson

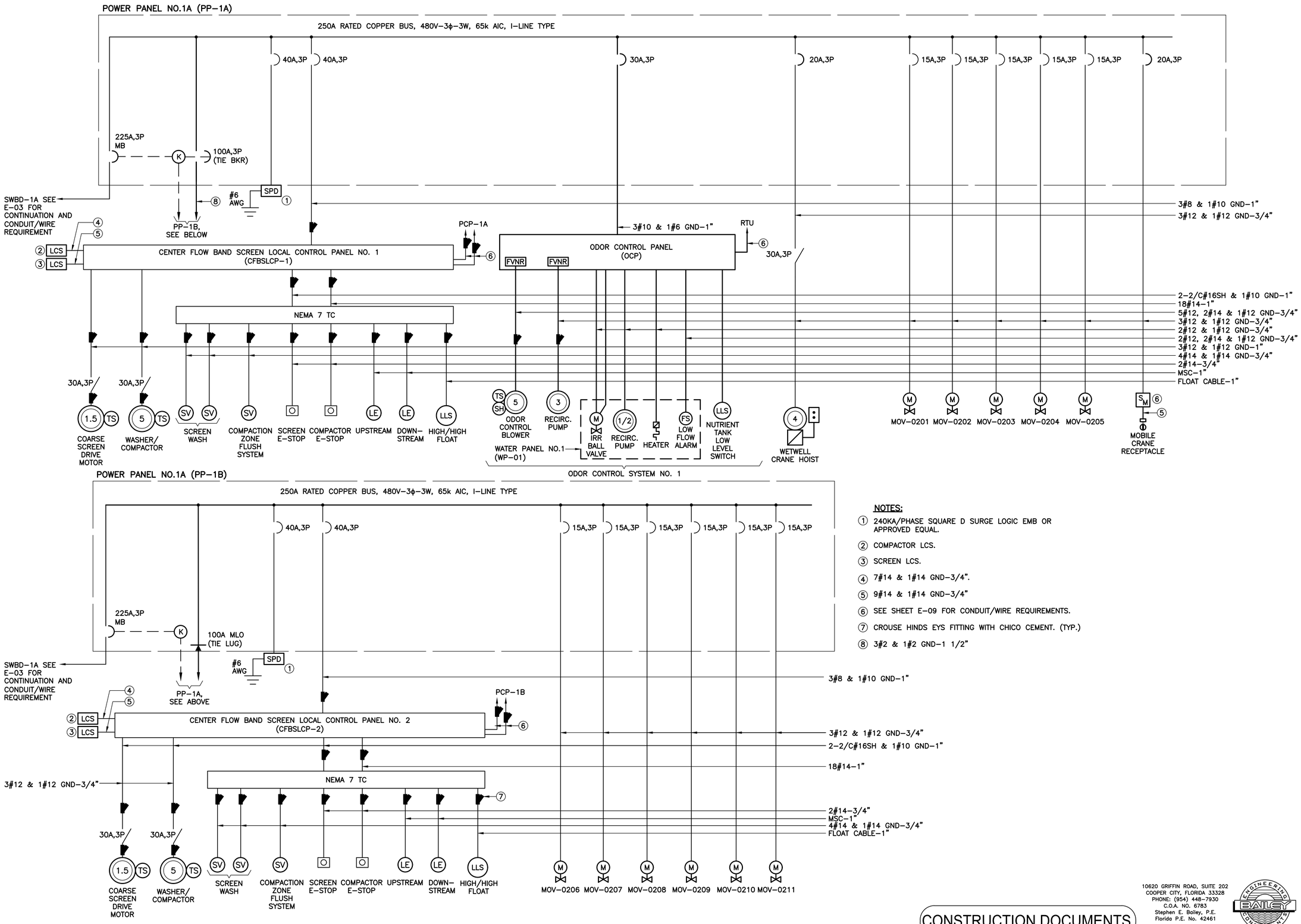

NOTES:

1. 240KA/PHASE SQUARE D SURGE LOGIC EMB OR APPROVED EQUAL.
2. COMPACTOR LCS.
3. SCREEN LCS.
4. 7#14 & 1#14 GND-3/4".
5. 9#14 & 1#14 GND-3/4"
6. SEE SHEET E-09 FOR CONDUIT/WIRE REQUIREMENTS.
7. CROUSE HINDS EYS FITTING WITH CHICO CEMENT. (TYP.)
8. 3#2 & 1#2 GND-1 1/2"

CONSTRUCTION DOCUMENTS

10620 GRIFFIN ROAD, SUITE 202
COOPER CITY, FLORIDA 33328
PHONE: (954) 448-7930
C.O.A. NO. 6783
Stephen E. Bailey, P.E.
Florida P.E. No. 42461

No.	REVISIONS	DATE	BY

Kimley»Horn

PROFESSIONAL ENGINEER
STEPHEN E. BAILEY
2122-E
U.S. VIRGIN ISLANDS

KHA PROJECT	045826000
DATE	JUNE 2026
SCALE	AS SHOWN
DESIGNED BY	JPL
DRAWN BY	FAD
CHECKED BY	SEB

SWBD1A & SWBD1B SINGLE LINE DIAGRAM

LBJ PUMP STATION
PREPARED FOR
VIWMA

SHEET NUMBER
E-05

This document, together with the concepts and designs presented herein, as an instrument of service, is intended only for the specific purpose and client for which it was prepared. Reuse of and improper reliance on this document without written authorization and adaptation by Kimley-Horn and Associates, Inc. shall be without liability to Kimley-Horn and Associates, Inc.

X:\Active Projects\Kimley Horn\Virgin Islands\06_ 100% Redesign\Dwgs\E-05 PP1A & PP1B SLD-1.dwg, 6/29/2026 3:59:23 PM, mthompson

PP1A LOAD TABULATION

SERVICE VOLTAGE: 480V–3ø–3W

DESCRIPTION	CONNECTED LOAD	AMPACITY	OPERATING LOAD	AMPACITY
'CFBSLCP–1'				
①SCREEN DRIVE MOTOR	1 @ 1.5 HP	= 3.00 AMPS	1 @ 1.5 HP	
WASHER/COMPACTOR	1 @ 5 HP	= 7.60 AMPS	1 @ 5 HP	= 7.60 AMPS
'OCP–1'				
①ODOR CONTROL BLOWER	1 @ 5 HP	= 7.60 AMPS	1 @ 5 HP	= 52.00 AMPS
RECIRCULATION PUMP	1 @ 3 HP	= 4.80 AMPS	1 @ 3 HP	= 7.60 AMPS
CRANE HOIST	1 @ 4 HP	= 7.80 AMPS	1 @ 4 HP	= 7.80 AMPS
MOTORIZED VALVES	5 @ 1/2 HP	= 5.50 AMPS	5 @ 1/2 HP	= 7.80 AMPS
	CONNECTED LOAD	= 36.30 AMPS	OPERATING LOAD	= 82.80 AMPS

NOTES:

① AMPACITIES PER TABLE 430–250 OF THE NATIONAL ELECTRICAL CODE.

PP1B LOAD TABULATION

SERVICE VOLTAGE: 480V–3ø–3W

DESCRIPTION	CONNECTED LOAD	AMPACITY	OPERATING LOAD	AMPACITY
'CFBSLCP–2'				
①SCREEN DRIVE MOTOR	1 @ 1.5 HP	= 3.00 AMPS	1 @ 1.5 HP	= 3.00 AMPS
①WASHER/COMPACTOR	1 @ 5 HP	= 7.60 AMPS	1 @ 5 HP	= 7.60 AMPS
MOTORIZED VALVES	6 @ 1/2 HP	= 6.60 AMPS	6 @ 1/2 HP	= 6.60 AMPS
	CONNECTED LOAD	= 17.20 AMPS	OPERATING LOAD	= 17.20 AMPS

NOTES:

① AMPACITIES PER TABLE 430–250 OF THE NATIONAL ELECTRICAL CODE.

SWBD1A LOAD TABULATION

SERVICE VOLTAGE: 480V–3ø–3W

DESCRIPTION	CONNECTED LOAD	AMPACITY	OPERATING LOAD	AMPACITY
①MASTER LIFT STATION PUMPS	3 @ 250 HP EA	= 906.00 AMPS	2 @ 250 HP EA	= 604.00 AMPS
'CFBSLCP–1'				
①SCREEN DRIVE MOTOR	1 @ 1.5 HP	= 3.00 AMPS	1 @ 1.5 HP	
WASHER/COMPACTOR	1 @ 5 HP	= 7.60 AMPS	1 @ 5 HP	= 7.60 AMPS
'OCP–1'				
①ODOR CONTROL BLOWER	1 @ 5 HP	= 7.60 AMPS	1 @ 5 HP	= 52.00 AMPS
AHU–1A	–	= 10.00 AMPS		
ACCU–1A	–	= 20.00 AMPS		
XFMR 'T–L1'	1 @ 30 KVA	= 36.08 AMPS	1 @ 30 KVA	= 36.08 AMPS
XFMR 'T–L2'	1 @ 75 KVA	= 90.21 AMPS	1 @ 75 KVA	= 90.21 AMPS
XFMR 'T–GLC1A'	1 @ 15 KVA	= 31.25 AMPS	1 @ 15 KVA	= 31.25 AMPS
CRANE HOIST	1 @ 4 HP	= 7.80 AMPS	1 @ 4 HP	= 7.80 AMPS
MOBILE CRANE	1 @ 4 HP	= 7.80 AMPS	1 @ 4 HP	= 7.80 AMPS
'CISTERN TREATMENT SKID'				
PANEL 'PP1A'	–	= 36.30 AMPS	–	= 82.80 AMPS
	CONNECTED LOAD	= 1168.44 AMPS	OPERATING LOAD	= 927.14 AMPS

②SERVICE ENTRANCE = 1168.44 AMPS + 0.25(302.00) = 1243.94 AMPS

②DEMAND LOAD @ 85% = 1057.35 AMPS

NOTES:

① AMPACITIES PER TABLE 430–250 OF THE NATIONAL ELECTRICAL CODE.

② SERVICE ENTRANCE MINIMUM SIZE AS PER ARTICLE 230 OF THE NATIONAL ELECTRICAL CODE.

SWBD1B LOAD TABULATION

SERVICE VOLTAGE: 480V–3ø–3W

DESCRIPTION	CONNECTED LOAD	AMPACITY	OPERATING LOAD	AMPACITY
①MASTER LIFT STATION PUMPS	3 @ 250 HP EA	= 906.00 AMPS	2 @ 250 HP EA	= 604.00 AMPS
'CFBSLCP–2'				
①SCREEN DRIVE MOTOR	1 @ 1.5 HP	= 3.00 AMPS	1 @ 1.5 HP	= 3.00 AMPS
①WASHER/COMPACTOR	1 @ 5 HP	= 7.60 AMPS	1 @ 5 HP	= 7.60 AMPS
AHU–1B	–	= 10.00 AMPS		
ACCU–1B	–	= 20.00 AMPS		
XFMR 'T–GLC1B'	1 @ 15 KVA	= 31.25 AMPS	1 @ 15 KVA	= 31.25 AMPS
MOBILE CRANE	1 @ 4 HP	= 7.80 AMPS	1 @ 4 HP	= 7.80 AMPS
SUBMERSIBLE PUMP	2 @ 5 HP EA	= 15.20 AMPS	1 @ 5 HP	= 7.60 AMPS
AERATION UNIT	1 @ 1/3 HP	= 3.80 AMPS	1 @ 1/3 HP	= 3.80 AMPS
PANEL 'PP1B'	–	= 17.20 AMPS	–	= 17.20 AMPS
	CONNECTED LOAD	= 1021.85 AMPS	OPERATING LOAD	= 682.20 AMPS

②SERVICE ENTRANCE = 1021.85 AMPS + 0.25(302.00) = 1098.55 AMPS

②DEMAND LOAD @ 85% = 932.75 AMPS

NOTES:

① AMPACITIES PER TABLE 430–250 OF THE NATIONAL ELECTRICAL CODE.

② SERVICE ENTRANCE MINIMUM SIZE AS PER ARTICLE 230 OF THE NATIONAL ELECTRICAL CODE.

GENERATOR NO. 1A FUEL TANK SIZING

FUEL CONSUMPTION	HOURS	REQUIRED
56.4 GPH (75% LOAD)	①② 72 HRS X 133%	= 5400.86 GAL.
	MINIMUM TANK SIZE	= 6000.00 GAL.

NOTES:

① AS PER NFPA 110 TABLE 4.1 (a). MINIMUM TIME, IN HOURS, FOR WHICH THE EMERGENCY POWER SYSTEM IS DESIGNED TO OPERATE AT ITS RATED LOAD WITHOUT BEING REGULATED.

② AS PER NFPA 110 5.5.3 – THE MAIN FUEL RESERVOIR SHALL HAVE A MINIMUM CAPACITY OF AT LEAST 133% OF THAT SPECIFIED IN TABLE 4.1 (a).

GENERATOR NO. 1B FUEL TANK SIZING

FUEL CONSUMPTION	HOURS	REQUIRED
56.40 GPH (75% LOAD)	①② 72 HRS X 133%	= 5400.86 GAL.
	MINIMUM TANK SIZE	= 6000.00 GAL.

NOTES:

① AS PER NFPA 110 TABLE 4.1 (a). MINIMUM TIME, IN HOURS, FOR WHICH THE EMERGENCY POWER SYSTEM IS DESIGNED TO OPERATE AT ITS RATED LOAD WITHOUT BEING REGULATED.

② AS PER NFPA 110 5.5.3 – THE MAIN FUEL RESERVOIR SHALL HAVE A MINIMUM CAPACITY OF AT LEAST 133% OF THAT SPECIFIED IN TABLE 4.1 (a).

CONSTRUCTION DOCUMENTS

10620 GRIFFIN ROAD, SUITE 202
COOPER CITY, FLORIDA 33328
PHONE: (954) 448–7930
C.O.A. NO. 6783
Stephen E. Bailey, P.E.
Florida P.E. No. 42461

No.	REVISIONS	DATE	BY

Kimley»Horn

PROFESSIONAL ENGINEER
STEPHEN E. BAILEY
2122–E
U.S. VIRGIN ISLANDS

KHA PROJECT 045826000
DATE JUNE 2026
SCALE AS SHOWN
DESIGNED BY JPL
DRAWN BY FAD
CHECKED BY SEB

LOAD TABULATIONS

LBJ PUMP STATION
PREPARED FOR
VIWMA

SHEET NUMBER
E-06

This document, together with the concepts and designs presented herein, as an instrument of service, is intended only for the specific purpose and client for which it was prepared. Reuse of and improper reliance on this document without written authorization and adaptation by Kimley-Horn and Associates, Inc. shall be without liability to Kimley-Horn and Associates, Inc.

X:\Active Projects\Kimley Horn\Virgin Islands\06_100% Redesign\Dwgs\E-06 LOAD TABS.dwg, 6/29/2026 3:59:23 PM, mthompson

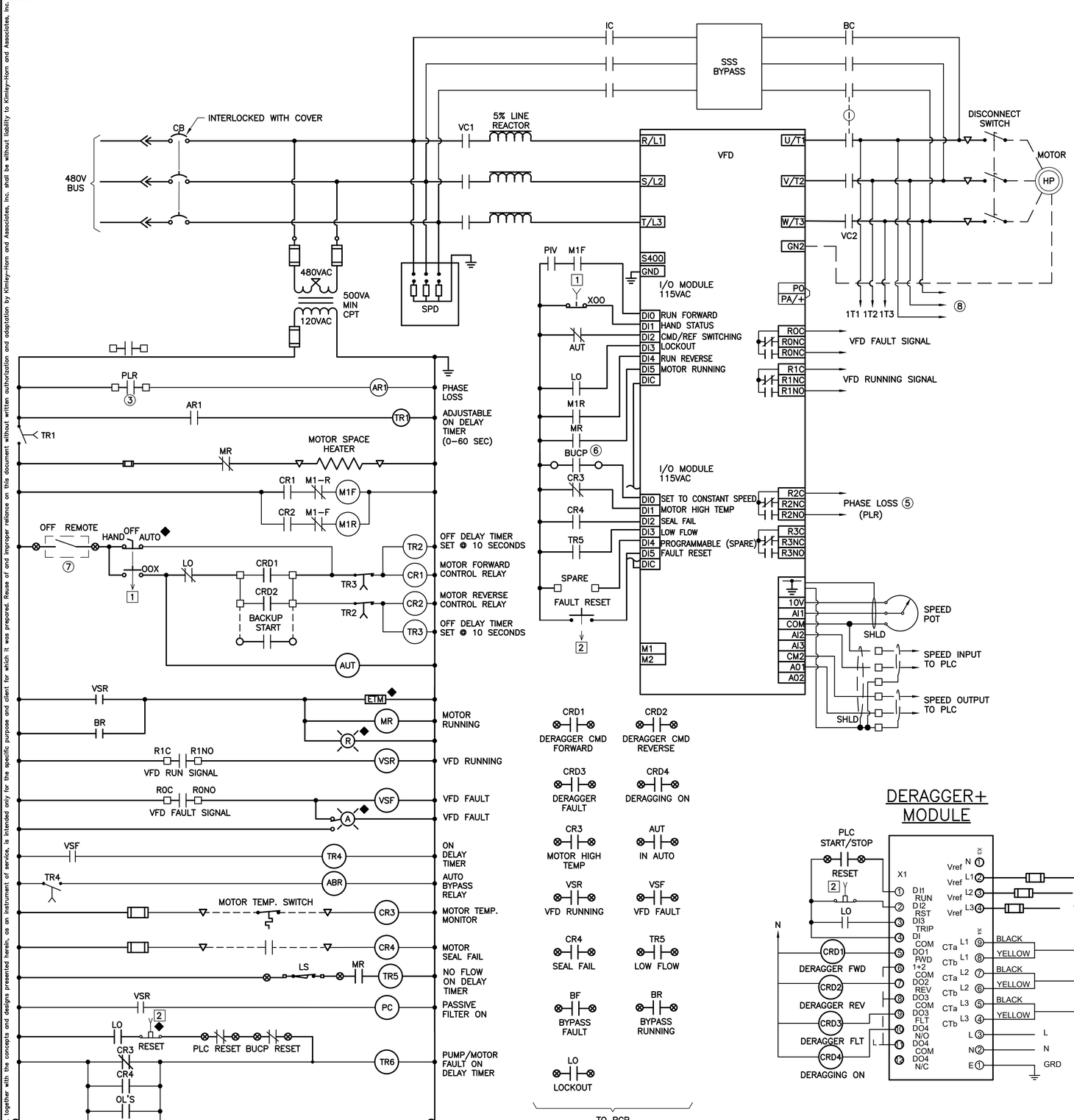

MASTER LIFT STATION VFD ELEMENTARY DIAGRAM (TYP.)

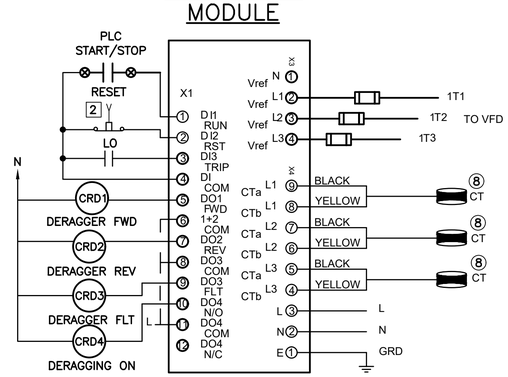

DERAGGER+ MODULE

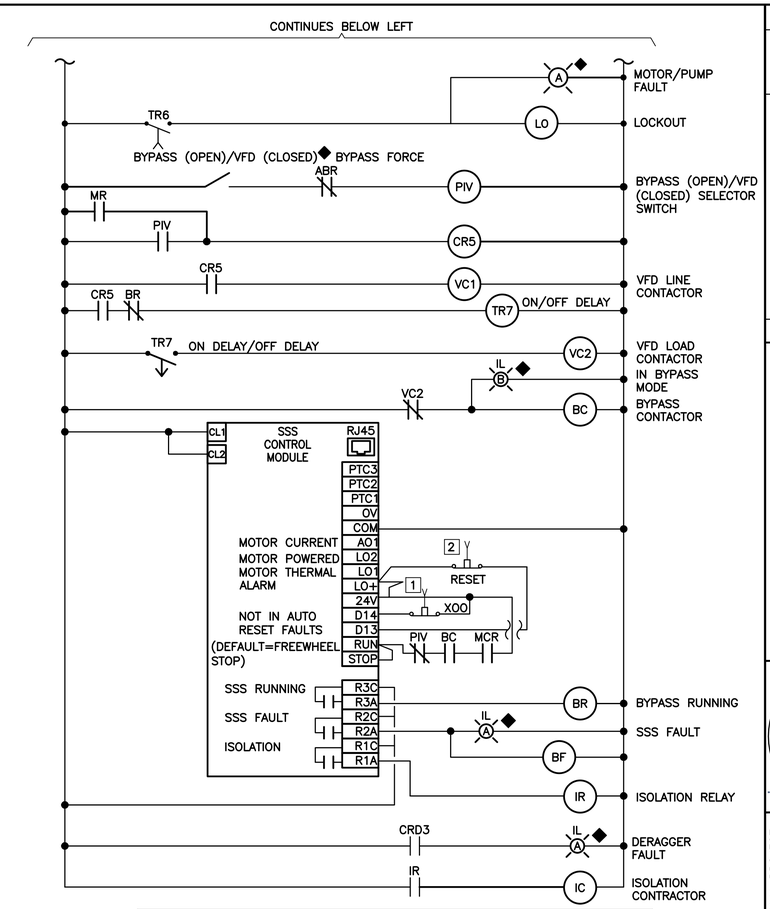

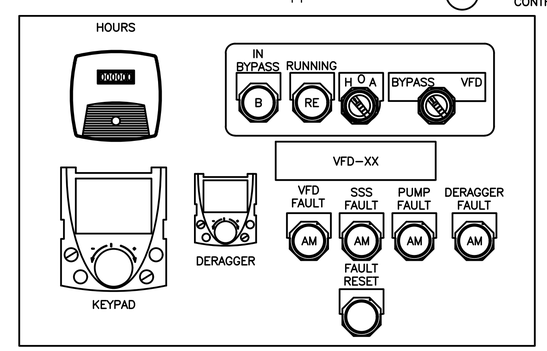

FRONT VIEW

NOTES:

1. ◆MOUNTED ON FRONT PANEL.
2. KEY TO TERMINALS:
   - ⊗ FIELD CONNECTION
   - □ VFD
   - ▽ MOTOR
   - ○ BACKUP CP
3. CONTACT SHOWN IN DE-ENERGIZED/ FAULT STATE.
4. TEMP. INTERLOCK CLOSES WHEN POWER IS APPLIED.
5. PHASE LOSS IS INTERNAL TO THE VFD.
6. PRESET SPEED OVERRIDE WHEN IN BACKUP MODE.
7. INSTALL OFF/REMOTE SWITCH (TYPICAL OF 3) ON FRONT OF EACH MASTER LIFT STATION LOCAL CONTROL PANEL
8. TO DERAGGER CURRENT TRANSFORMER (CT)

CONSTRUCTION DOCUMENTS

10620 GRIFFIN ROAD, SUITE 202
COOPER CITY, FLORIDA 33328
PHONE: (954) 448-7930
C.O.A. NO. 6783
Stephen E. Bailey, P.E.
Florida P.E. No. 42461

No.	REVISIONS	DATE	BY

Kimley»Horn

PROFESSIONAL ENGINEER STEPHEN E. BAILEY 2122-E U.S. VIRGIN ISLANDS

KHA PROJECT	045826000
DATE	JUNE 2026
SCALE	AS SHOWN
DESIGNED BY	JPL
DRAWN BY	FAD
CHECKED BY	SEB

PUMP STATION VFD ELEMENTARY DIAGRAM

LBJ PUMP STATION PREPARED FOR VIWMA

SHEET NUMBER E-07

This document, together with the concepts and designs presented herein, as an instrument of service, is intended only for the specific purpose and client for which it was prepared. Reuse of and improper reliance on this document without written authorization and adaptation by Kimley-Horn and Associates, Inc. shall be without liability to Kimley-Horn and Associates, Inc.

X:\Active Projects\Kimley Horn\Virgin Islands\06_ 100% Redesign\Dwgs\E-07 PS VFD ELEM DIA.dwg, 6/29/2026 3:59:27 PM, mthompson

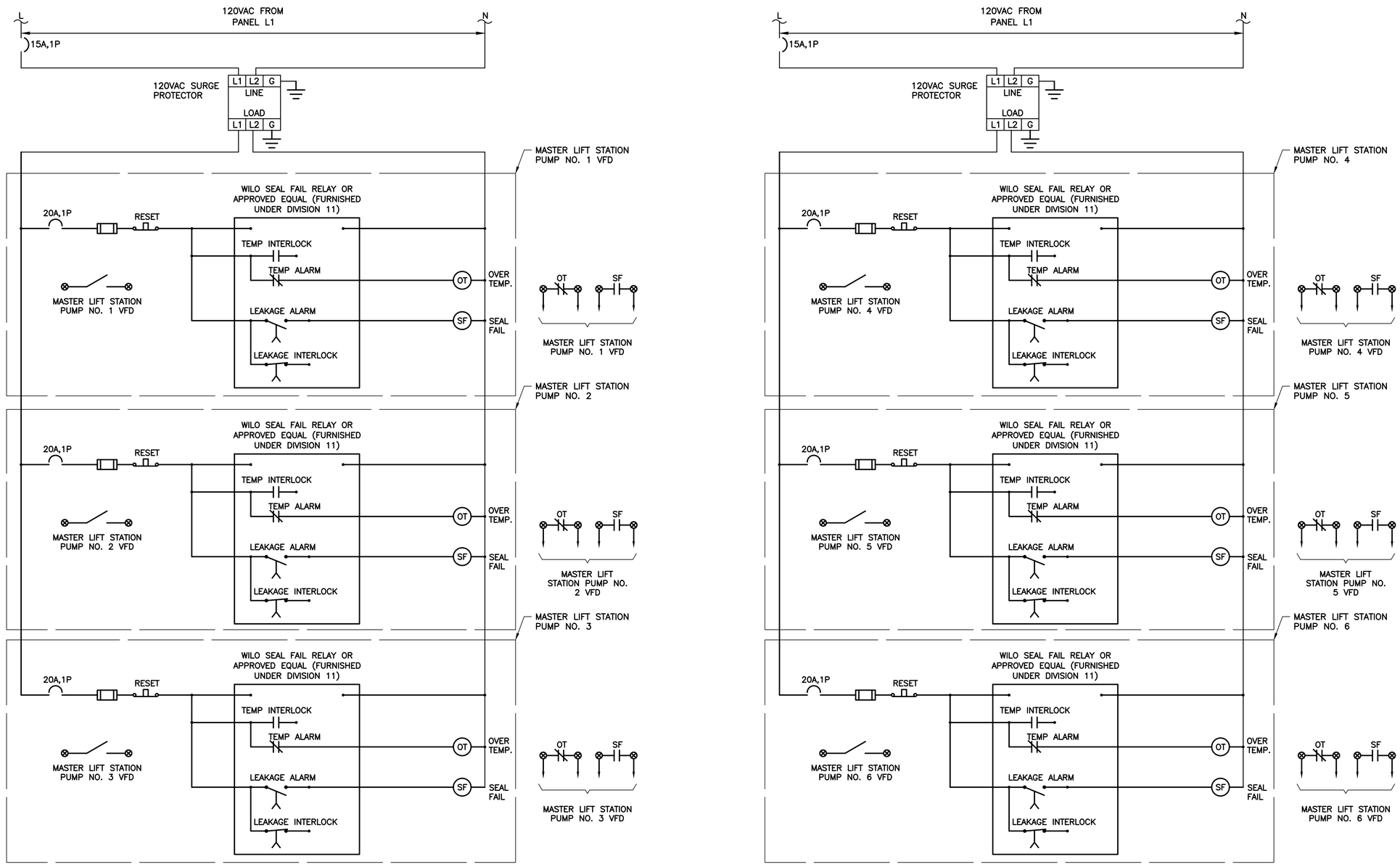

NOTES:

1. TWO (2) LCPS TO BE PROVIDED. ONE FOR BNR TRAIN 3 LCP AND ONE FOR TRAIN 4 LCP.

MASTER LIFT STATION LOCAL CONTROL PANEL ELEMENTARY DIAGRAM (TYPICAL OF 2 LCPS)

CONSTRUCTION DOCUMENTS

10620 GRIFFIN ROAD, SUITE 202
COOPER CITY, FLORIDA 33328
PHONE: (954) 448-7930
C.O.A. NO. 6783
Stephen E. Bailey, P.E.
Florida P.E. No. 42461

No.	REVISIONS	DATE	BY

Kimley»Horn

PROFESSIONAL ENGINEER
STEPHEN E. BAILEY
2122-E
U.S. VIRGIN ISLANDS

KHA PROJECT 045826000	
DATE	JUNE 2026
SCALE	AS SHOWN
DESIGNED BY	JPL
DRAWN BY	FAD
CHECKED BY	SEB

MASTER LIFT STATION LOCAL COUNTER PANEL ELEMENTARY DIAGRAM

LBJ PUMP STATION
PREPARED FOR
VIWMA

SHEET NUMBER
E-08

This document, together with the concepts and designs presented herein, as an instrument of service, is intended only for the specific purpose and client for which it was prepared. Reuse of and improper reliance on this document without written authorization and adaptation by Kimley-Horn and Associates, Inc. shall be without liability to Kimley-Horn and Associates, Inc.

X:\Active Projects\Kimley Horn\Virgin Islands\06_100% Redesign\Dwgs\E-08 MLS LCP ELEM DIA.dwg, 6/29/2026 3:59:30 PM, mthompson

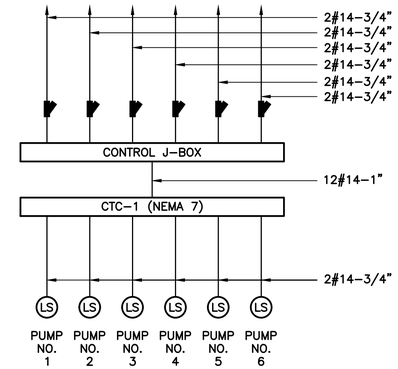

CTC-1 RISER DIAGRAM

NOTES:

1. SEE PANEL SCHEDULES & PLAN VIEWS FOR CIRCUIT DESIGNATIONS
2. 6#14-3/4"

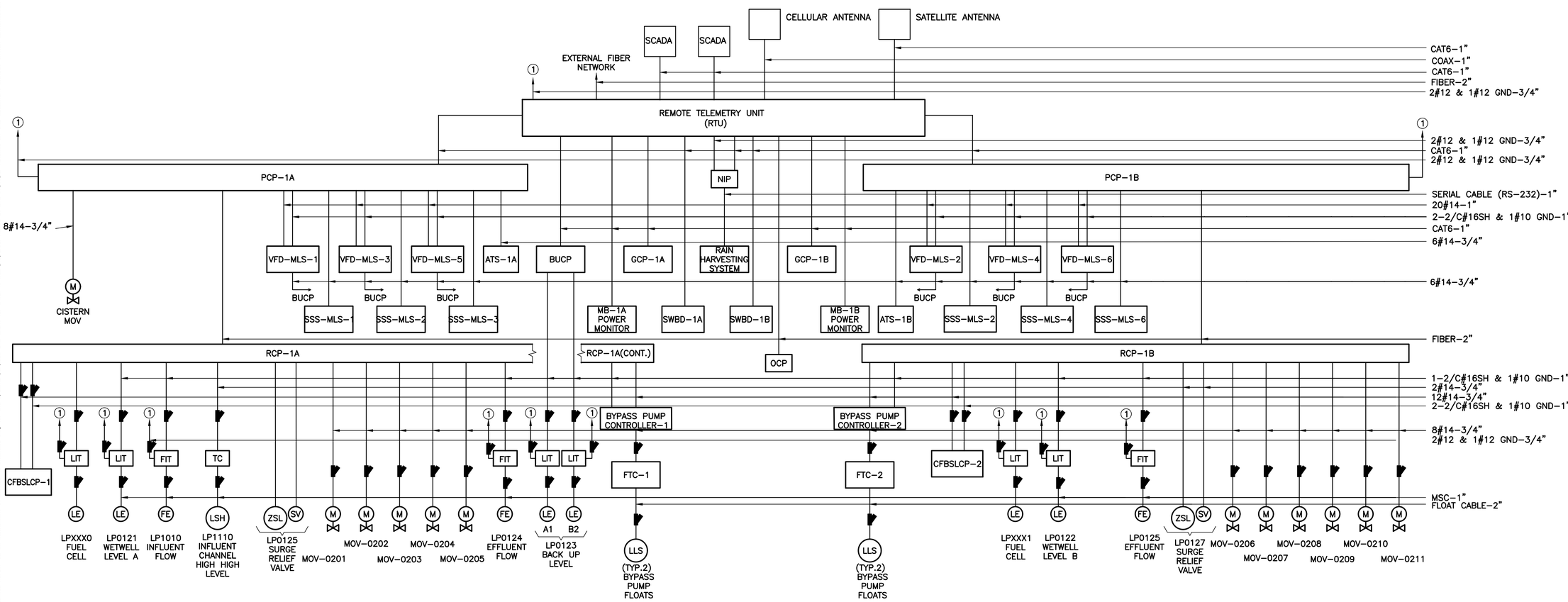

CONTROL RISER DIAGRAM

No.	REVISIONS	DATE	BY

Kimley»Horn

Sign of Quality

PROFESSIONAL ENGINEER
STEPHEN E. BAILEY
2122-E
U.S. VIRGIN ISLANDS

KHA PROJECT 045826000	
DATE	JUNE 2026
SCALE	AS SHOWN
DESIGNED BY	JPL
DRAWN BY	FAD
CHECKED BY	SEB

NETWORK & CONTROL RISER DIAGRAMS

LBJ PUMP STATION
PREPARED FOR
VIWMA

SHEET NUMBER
E-09

CONSTRUCTION DOCUMENTS

10620 GRIFFIN ROAD, SUITE 202
COOPER CITY, FLORIDA 33328
PHONE: (954) 448-7930
C.O.A. NO. 6783
Stephen E. Bailey, P.E.
Florida P.E. No. 42461

ENGINEERING BAILEY CONSULTANTS

This document, together with the concepts and designs presented herein, as an instrument of service, is intended only for the specific purpose and client for which it was prepared. Reuse of and improper reliance on this document without written authorization and adaptation by Kimley-Horn and Associates, Inc. shall be without liability to Kimley-Horn and Associates, Inc.

X:\Active Projects\Kimley Horn\Virgin Islands\06_ 100% Redesign\Dwgs\E-09 NTWK & CTRL RISER DIAG.dwg, 6/29/2026 3:39:33 PM, mthompson

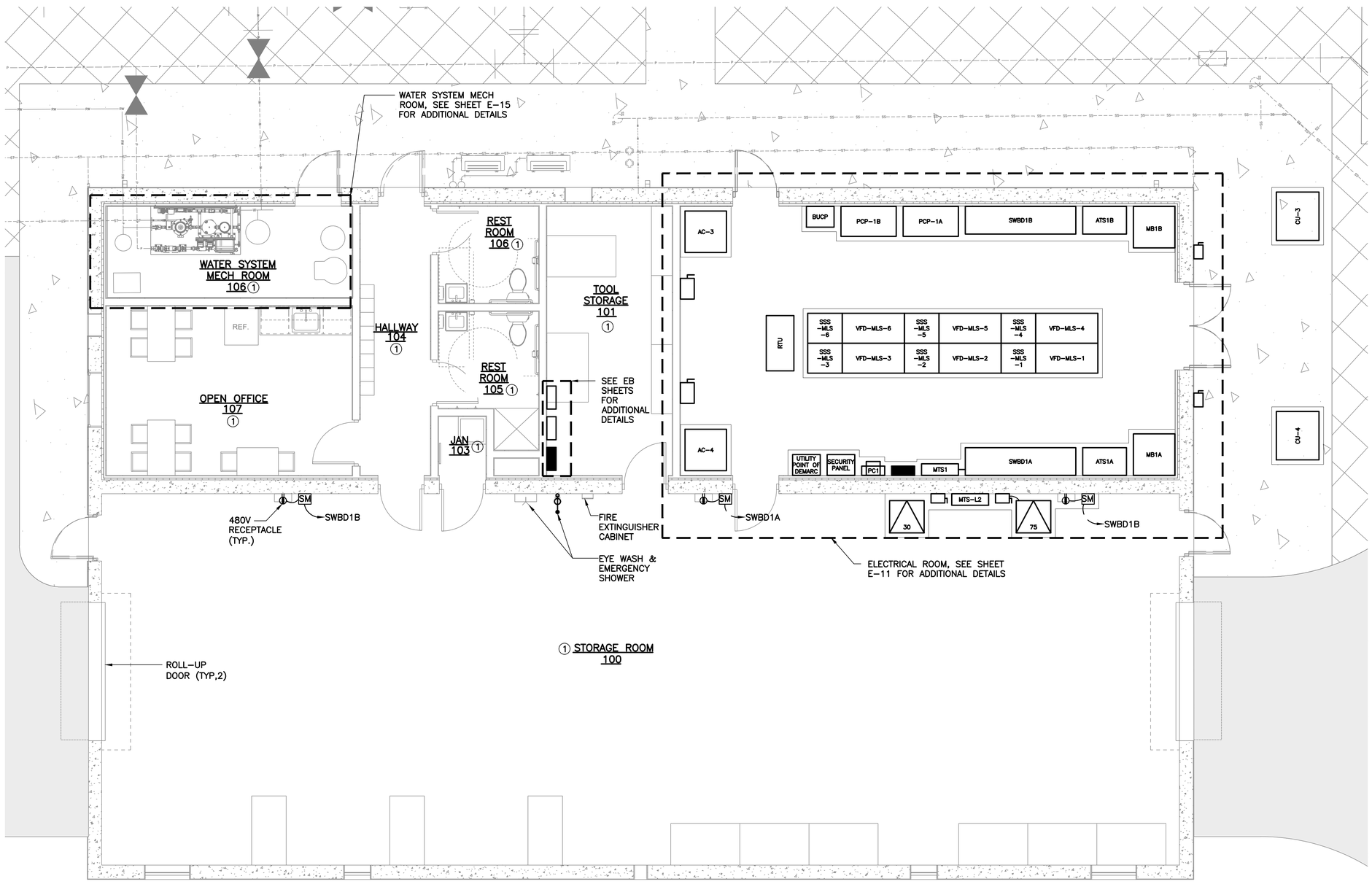

NOTE:

① BUILDING ELECTRICAL DESIGN PROVIDED BY OTHERS.

② BUILDING LIGHTING DESIGN PROVIDED BY OTHERS.

OPERATIONS BUILDING ELECTRICAL PLAN

GRAPHIC SCALE IN INCHES
0 2 4 8
0 1/2" 1" 2"

CONSTRUCTION DOCUMENTS

10620 GRIFFIN ROAD, SUITE 202
COOPER CITY, FLORIDA 33328
PHONE: (954) 448-7930
C.O.A. NO. 6783
Stephen E. Bailey, P.E.
Florida P.E. No. 42461

No.	REVISIONS	DATE	BY

Kimley»Horn
Sign of Quality

PROFESSIONAL ENGINEER
STEPHEN E. BAILEY
2122-E
U.S. VIRGIN ISLANDS

KHA PROJECT	045826000
DATE	JUNE 2026
SCALE	AS SHOWN
DESIGNED BY	JPL
DRAWN BY	FAD
CHECKED BY	SEB

OPERATIONS BUILDING ELECTRICAL PLAN

LBJ PUMP STATION
PREPARED FOR
VIWMA

SHEET NUMBER
E-10

This document, together with the concepts and designs presented herein, as an instrument of service, is intended only for the specific purpose and client for which it was prepared. Reuse of and improper reliance on this document without written authorization and adaptation by Kimley-Horn and Associates, Inc. shall be without liability to Kimley-Horn and Associates, Inc.

X:\Active Projects\Kimley Horn\Virgin Islands\06_100% Redesign\Dwgs\E-10 OPS BLDG ELEC PLAN.dwg, 6/29/2026 4:00:05 PM, mthompson

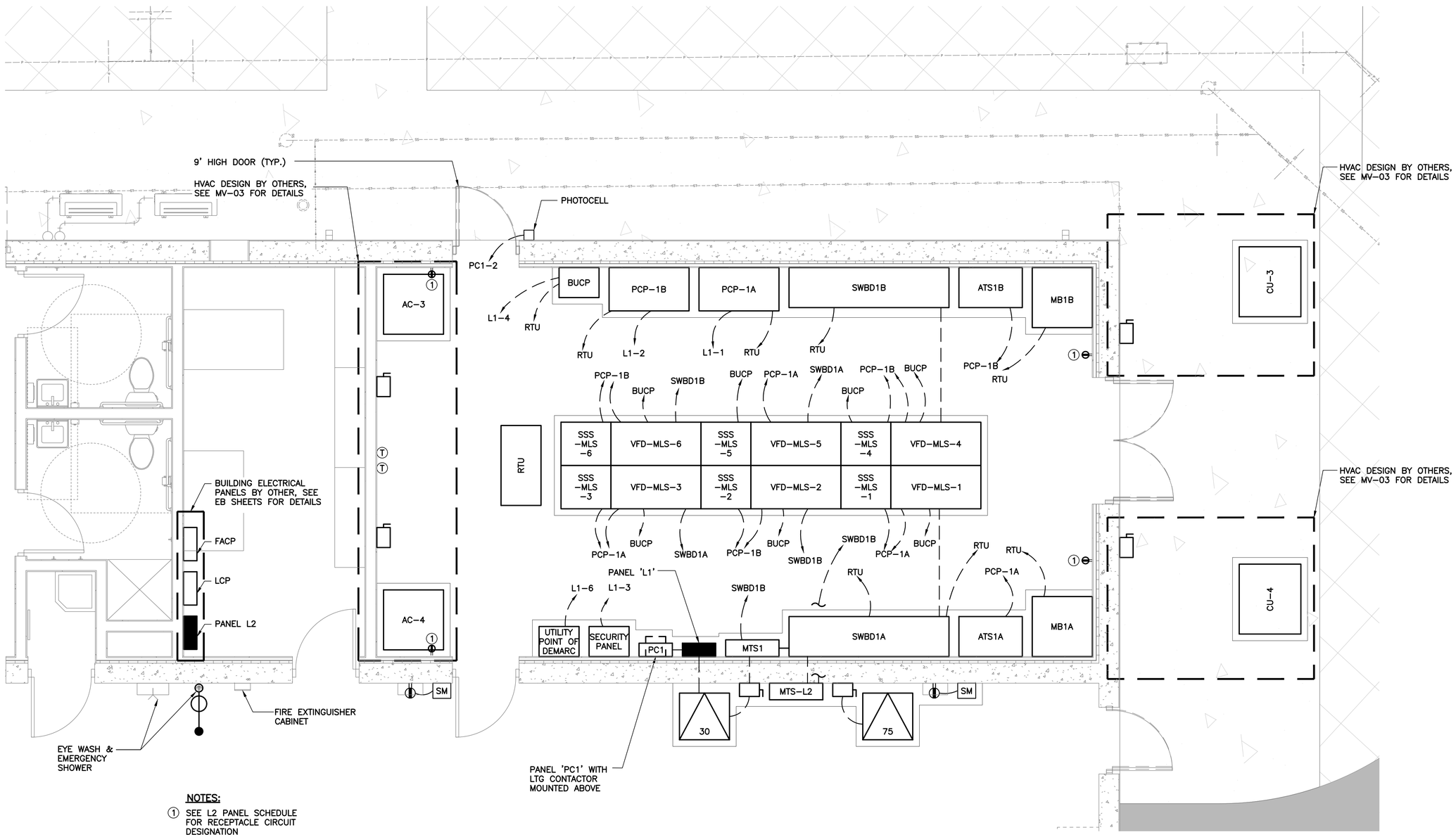

NOTES:

1. SEE L2 PANEL SCHEDULE FOR RECEPTACLE CIRCUIT DESIGNATION

ENLARGED ELECTRICAL ROOM POWER PLAN

SCALE: 3/8"=1'-0"

12" 0 1 2 4'

CONSTRUCTION DOCUMENTS

10620 GRIFFIN ROAD, SUITE 202
COOPER CITY, FLORIDA 33328
PHONE: (954) 448-7930
C.O.A. NO. 6783
Stephen E. Bailey, P.E.
Florida P.E. No. 42461

No.	REVISIONS	DATE	BY

Kimley»Horn

PROFESSIONAL ENGINEER
STEPHEN E. BAILEY
2122-E
U.S. VIRGIN ISLANDS

KHA PROJECT 045826000	
DATE	JUNE 2026
SCALE	AS SHOWN
DESIGNED BY	JPL
DRAWN BY	FAD
CHECKED BY	SEB

ENLARGED ELECTRICAL ROOM POWER PLAN

LBJ PUMP STATION
PREPARED FOR
VIWMA

SHEET NUMBER
E-11

This document, together with the concepts and designs presented herein, as an instrument of service, is intended only for the specific purpose and client for which it was prepared. Reuse of and improper reliance on this document without written authorization and adaptation by Kimley-Horn and Associates, Inc. shall be without liability to Kimley-Horn and Associates, Inc.

X:\Active Projects\Kimley Horn\Virgin Islands\06_100% Redesign\Dwgs\E-11 ELEC RM PWR.dwg 6/29/2026 4:00:11 PM, mthompson

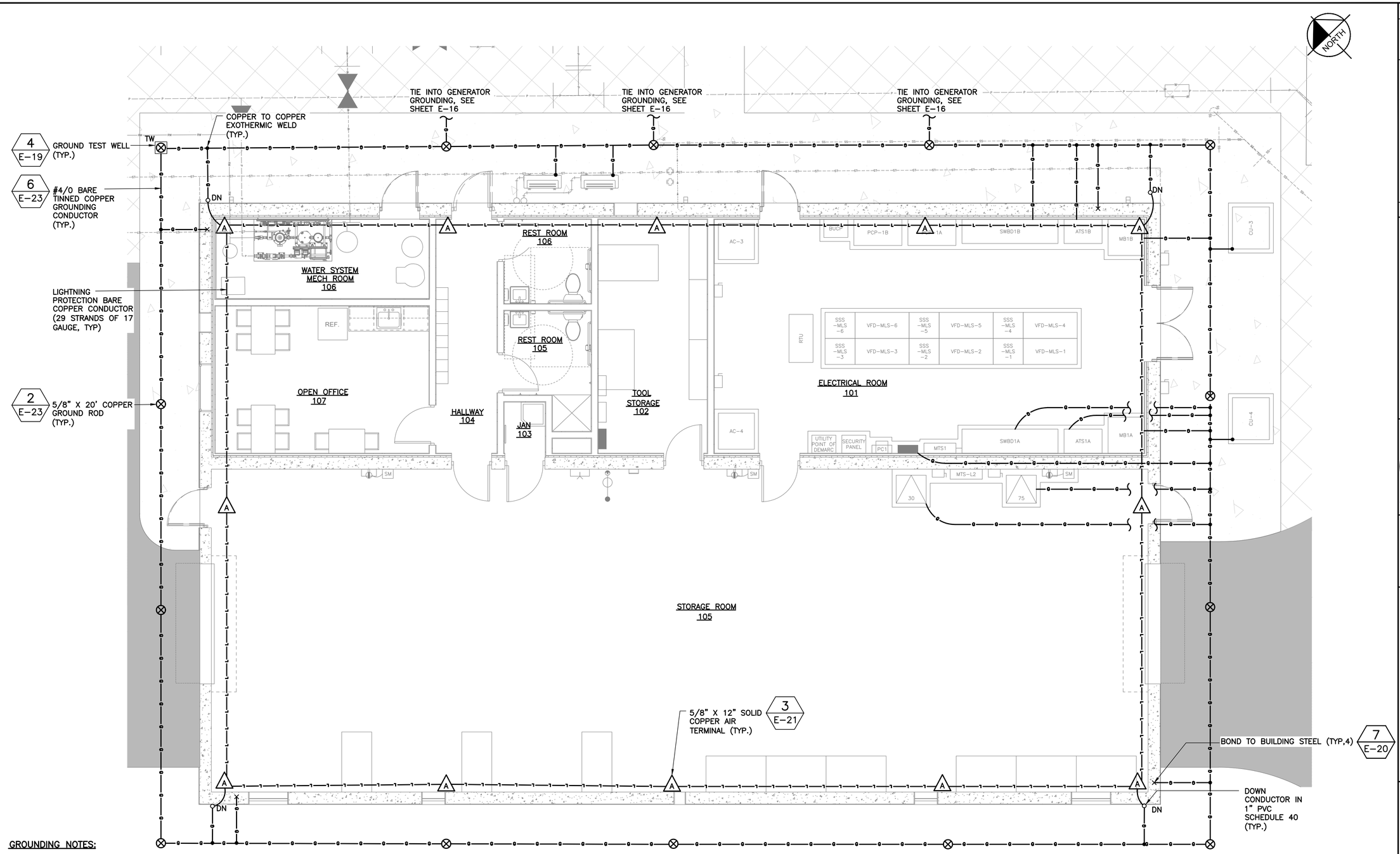

OPERATIONS BUILDING GROUNDING & LIGHTING PROTECTION PLAN

GRAPHIC SCALE IN INCHES
0 2 4 8
0 1/2" 1" 2"

GROUNDING NOTES:

(A) ALL CONNECTIONS TO BE EXOTHERMIC PROCESS.

(B) COORDINATE GROUND ROD LOCATIONS WITH YARD PIPING AND CONDUIT LAYOUT.

(C) ALL COMPONENTS USED IN INSTALLATION SHALL COMPLY WITH SPECIFICATION SECTION 16450.

(D) COUNTERPOISE GROUND SYSTEM CONDUCTORS AND GROUND RODS SHALL MAINTAIN A BURIED DEPTH OF 30 INCHES FROM THE TOP TO FINISHED GRADE.

(E) FINAL CONNECTIONS OF GROUND SYSTEM TO BE COORDINATED IN THE FIELD WITH THE ENGINEER.

(F) A BI-METAL CABLE CONNECTOR SHALL BE USED FOR ALL CONNECTIONS BETWEEN DISSIMILAR METALS.

(G) HANDRAILS, WALKWAYS, EQUIPMENT RACKS, LIGHTING FIXTURE POLES AND PIPE SUPPORTS SHALL BE BONDED TO THE GROUNDING SYSTEM.

CONSTRUCTION DOCUMENTS

10620 GRIFFIN ROAD, SUITE 202
COOPER CITY, FLORIDA 33328
PHONE: (954) 448-7930
C.O.A. NO. 6783
Stephen E. Bailey, P.E.
Florida P.E. No. 42461

No.	REVISIONS	DATE	BY

Kimley»Horn
Sign of Quality

PROFESSIONAL ENGINEER
STEPHEN E. BAILEY
2122-E
U.S. VIRGIN ISLANDS

KHA PROJECT 045826000
DATE JUNE 2026
SCALE AS SHOWN
DESIGNED BY JPL
DRAWN BY FAD
CHECKED BY SEB

OPERATIONS BUILDING GROUNDING & LIGHTING PROTECTION PLAN

LBJ PUMP STATION
PREPARED FOR
VIWMA

SHEET NUMBER
E-12

This document, together with the concepts and designs presented herein, as an instrument of service, is intended only for the specific purpose and client for which it was prepared. Reuse of and improper reliance on this document without written authorization and adaptation by Kimley-Horn and Associates, Inc. shall be without liability to Kimley-Horn and Associates, Inc.

X:\Active Projects\Kimley Horn\Virgin Islands\06_100% Redesign\Dwgs\E-12 OPS BLDG GND PLAN.dwg, 6/29/2026 4:00:20 PM, mthompson

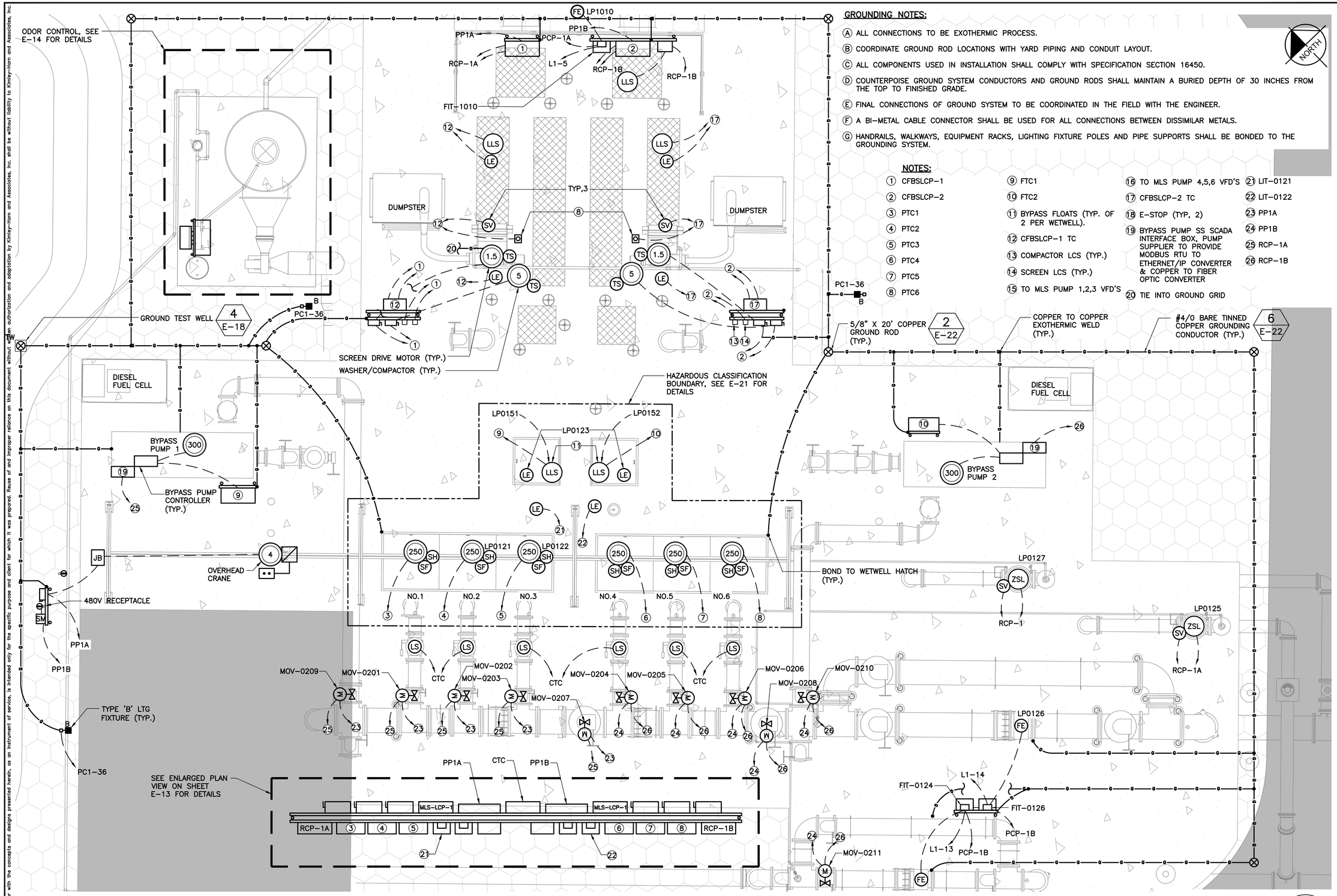

GROUNDING NOTES:

Ⓐ ALL CONNECTIONS TO BE EXOTHERMIC PROCESS.

Ⓑ COORDINATE GROUND ROD LOCATIONS WITH YARD PIPING AND CONDUIT LAYOUT.

Ⓒ ALL COMPONENTS USED IN INSTALLATION SHALL COMPLY WITH SPECIFICATION SECTION 16450.

Ⓓ COUNTERPOISE GROUND SYSTEM CONDUCTORS AND GROUND RODS SHALL MAINTAIN A BURIED DEPTH OF 30 INCHES FROM THE TOP TO FINISHED GRADE.

Ⓔ FINAL CONNECTIONS OF GROUND SYSTEM TO BE COORDINATED IN THE FIELD WITH THE ENGINEER.

Ⓕ A BI-METAL CABLE CONNECTOR SHALL BE USED FOR ALL CONNECTIONS BETWEEN DISSIMILAR METALS.

Ⓖ HANDRAILS, WALKWAYS, EQUIPMENT RACKS, LIGHTING FIXTURE POLES AND PIPE SUPPORTS SHALL BE BONDED TO THE GROUNDING SYSTEM.

NOTES:

1. CFBSLCP-1
2. CFBSLCP-2
3. PTC1
4. PTC2
5. PTC3
6. PTC4
7. PTC5
8. PTC6
9. FTC1
10. FTC2
11. BYPASS FLOATS (TYP. OF 2 PER WETWELL).
12. CFBSLCP-1 TC
13. COMPACTOR LCS (TYP.)
14. SCREEN LCS (TYP.)
15. TO MLS PUMP 1,2,3 VFD'S
16. TO MLS PUMP 4,5,6 VFD'S
17. CFBSLCP-2 TC
18. E-STOP (TYP, 2)
19. BYPASS PUMP SS SCADA INTERFACE BOX, PUMP SUPPLIER TO PROVIDE MODBUS RTU TO ETHERNET/IP CONVERTER & COPPER TO FIBER OPTIC CONVERTER
20. TIE INTO GROUND GRID
21. LIT-0121
22. LIT-0122
23. PP1A
24. PP1B
25. RCP-1A
26. RCP-1B

HEADWORKS & PUMP STATION ELECTRICAL PLAN

GRAPHIC SCALE IN INCHES
0 2 4 8
0 1/2" 1" 2"

CONSTRUCTION DOCUMENTS

10620 GRIFFIN ROAD, SUITE 202
COOPER CITY, FLORIDA 33328
PHONE: (954) 448-7930
C.O.A. NO. 6783
Stephen E. Bailey, P.E.
Florida P.E. No. 42461

No.	REVISIONS	DATE	BY

Kimley»Horn

EDPT Sign of Quality

PROFESSIONAL ENGINEER
STEPHEN E. BAILEY
2122-E
U.S. VIRGIN ISLANDS

KHA PROJECT 045826000	
DATE	JUNE 2026
SCALE	AS SHOWN
DESIGNED BY	JPL
DRAWN BY	FAD
CHECKED BY	SEB

HEADWORKS & PUMP STATION ELECTRICAL PLAN

LBJ PUMP STATION
PREPARED FOR
VIWMA

SHEET NUMBER
E-13

This document, together with the concepts and designs presented herein, as an instrument of service, is intended only for the specific purpose and client for which it was prepared. Reuse of and improper reliance on this document without written authorization and adaptation by Kimley-Horn and Associates, Inc. shall be without liability to Kimley-Horn and Associates, Inc.

X:\Active Projects\Kimley Horn\Virgin Islands\06_100% Redesign\Dwgs\E-13 HDWKS PS ELEC PLAN.dwg, 6/29/2026 4:00:24 PM, mthompson

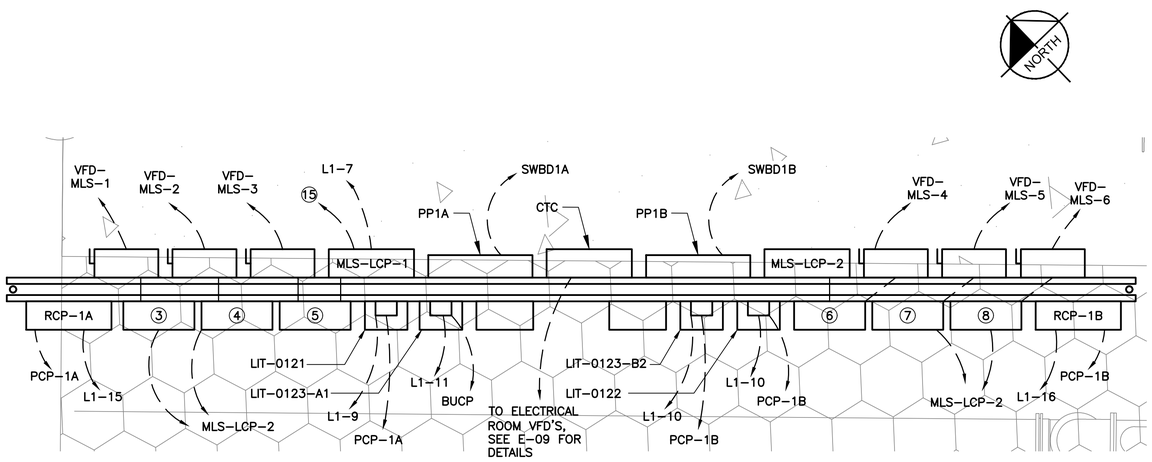

ENLARGED PLAN VIEW

SCALE: 3/8"=1'-0"

12" 0 1 2 4'

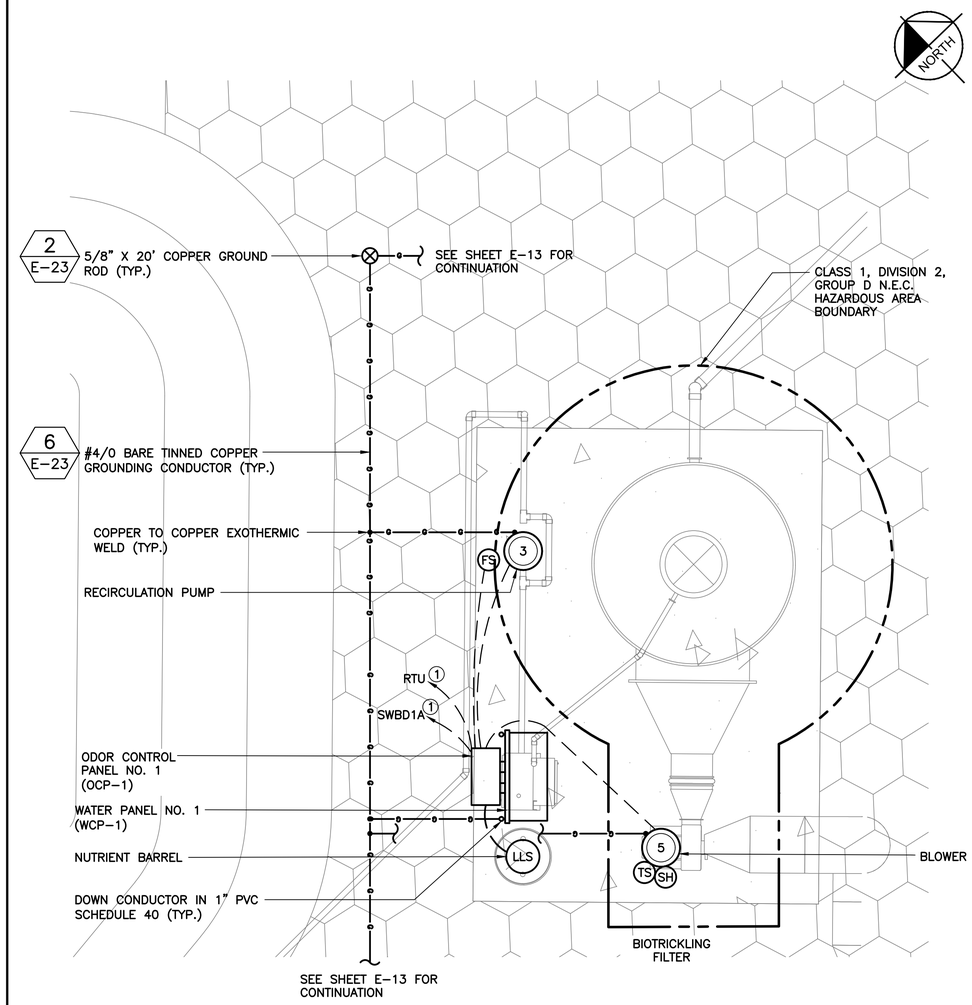

ODOR CONTROL UNIT NO.1 ELECTRICAL PLAN

SCALE: 3/8"=1'-0"

12" 0 1 2 4'

NOTES:

1. SEE SHEET E-02 FOR CONTINATION.

GROUNDING NOTES:

A. ALL CONNECTIONS TO BE EXOTHERMIC PROCESS.

B. COORDINATE GROUND ROD LOCATIONS WITH YARD PIPING AND CONDUIT LAYOUT.

C. ALL COMPONENTS USED IN INSTALLATION SHALL COMPLY WITH SPECIFICATION SECTION 16450.

D. COUNTERPOISE GROUND SYSTEM CONDUCTORS AND GROUND RODS SHALL MAINTAIN A BURIED DEPTH OF 30 INCHES FROM THE TOP TO FINISHED GRADE.

E. FINAL CONNECTIONS OF GROUND SYSTEM TO BE COORDINATED IN THE FIELD WITH THE ENGINEER.

F. A BI-METAL CABLE CONNECTOR SHALL BE USED FOR ALL CONNECTIONS BETWEEN DISSIMILAR METALS.

G. HANDRAILS, WALKWAYS, EQUIPMENT RACKS, LIGHTING FIXTURE POLES AND PIPE SUPPORTS SHALL BE BONDED TO THE GROUNDING SYSTEM.

CONSTRUCTION DOCUMENTS

10620 GRIFFIN ROAD, SUITE 202
COOPER CITY, FLORIDA 33328
PHONE: (954) 448-7930
C.O.A. NO. 6783
Stephen E. Bailey, P.E.
Florida P.E. No. 42461

No.	REVISIONS	DATE	BY

Kimley»Horn

PROFESSIONAL ENGINEER
STEPHEN E. BAILEY
2122-E
VIRGIN ISLANDS

KHA PROJECT 045826000	
DATE	JUNE 2026
SCALE	AS SHOWN
DESIGNED BY	JPL
DRAWN BY	FAD
CHECKED BY	SEB

ODOR CONTROL & CISTERN WATER TREATMENT ROOM ELECTRICAL PLAN

LBJ PUMP STATION
PREPARED FOR
VIWMA

SHEET NUMBER
E-14

This document, together with the concepts and designs presented herein, as an instrument of service, is intended only for the specific purpose and client for which it was prepared. Reuse of and improper reliance on this document without written authorization and adaptation by Kimley-Horn and Associates, Inc. shall be without liability to Kimley-Horn and Associates, Inc.

X:\Active Projects\Kimley Horn\Virgin Islands\06_100% Redesign\Dwgs\E-14 ODOR CNTRL & CISTERN PUMP RM ELEC PLAN.dwg, 6/29/2026 4:00:28 PM, mthompson

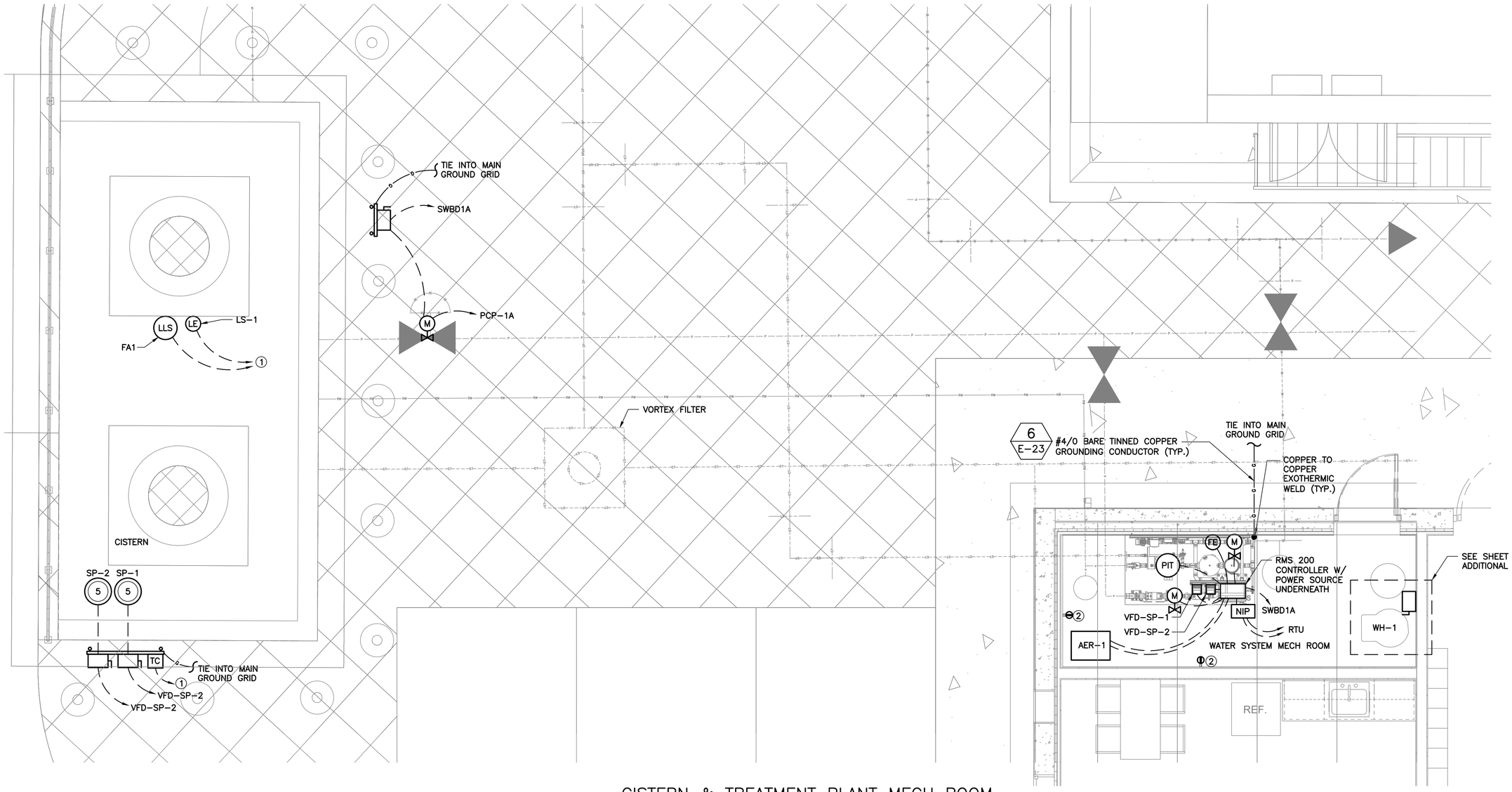

CISTERN & TREATMENT PLANT MECH ROOM

SCALE: 3/8"=1'-0"

12" 0 1 2 4'

NOTES:

1. RMS 200 CONTROLLER.
2. SEE L2 PANEL SCHEDULE FOR RECEPTACLE CIRCUIT DESIGNATION.

CONSTRUCTION DOCUMENTS

10620 GRIFFIN ROAD, SUITE 202
COOPER CITY, FLORIDA 33328
PHONE: (954) 448-7930
C.O.A. NO. 6783
Stephen E. Bailey, P.E.
Florida P.E. No. 42461

No.	REVISIONS	DATE	BY

Kimley»Horn

Sign of Quality

PROFESSIONAL ENGINEER
STEPHEN E. BAILEY
2122-E
VIRGIN ISLANDS

KHA PROJECT 045826000
DATE JUNE 2026
SCALE AS SHOWN
DESIGNED BY JPL
DRAWN BY FAD
CHECKED BY SEB

CISTERN & TREATMENT PLANT AND MECH ROOM

LBJ PUMP STATION
PREPARED FOR
VIWMA

SHEET NUMBER
E-15

This document, together with the concepts and designs presented herein, as an instrument of service, is intended only for the specific purpose and client for which it was prepared. Reuse of and improper reliance on this document without written authorization and adaptation by Kimley-Horn and Associates, Inc. shall be without liability to Kimley-Horn and Associates, Inc.

X:\Active Projects\Kimley Horn\Virgin Islands\06_100% Redesign\Dwgs\E-15 CISTERN & TREATMENT PLANT MECH ROOM.dwg, 6/29/2026 4:00:59 PM, mthompson

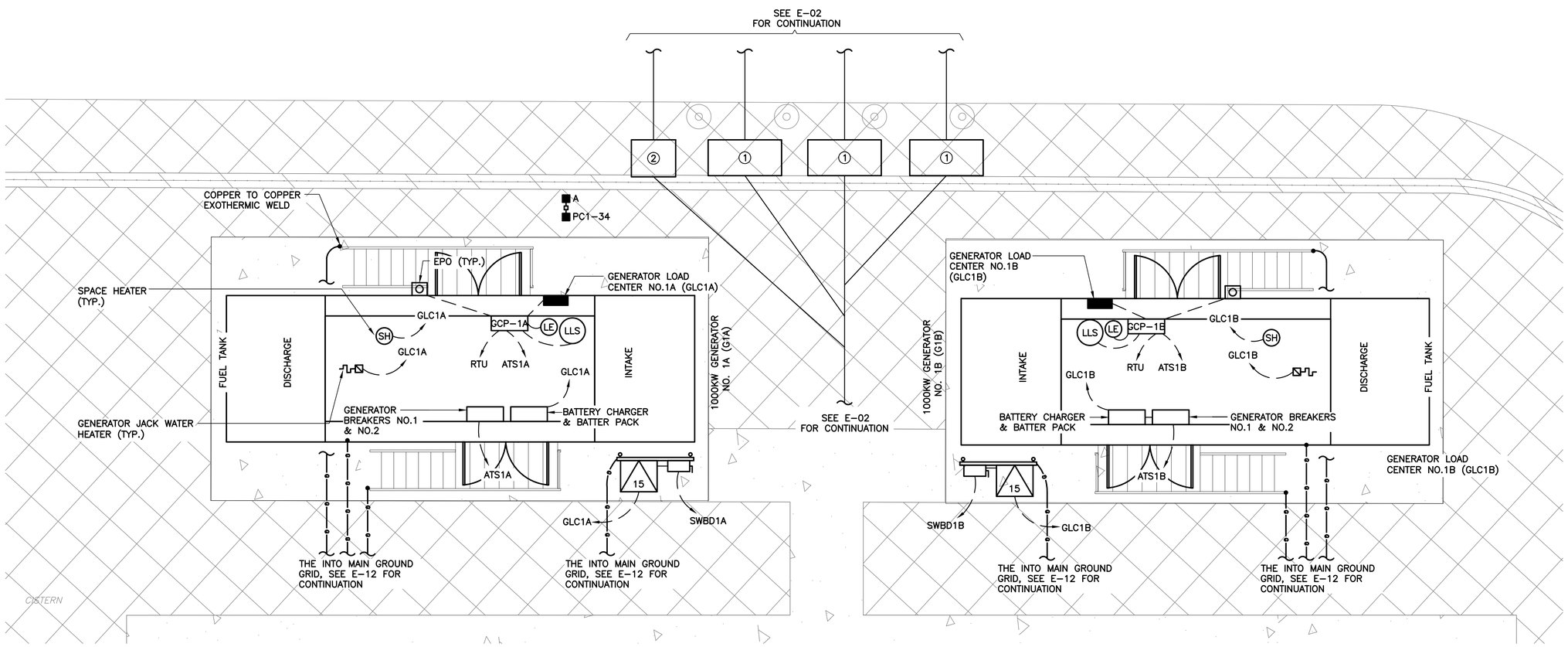

NOTES:

1. POWER J-BOX (NEMA 4X SS) (36"W X 36"H X 12"D MIN, SIZE PER NEC)
2. CONTROL J-BOX (NEMA 4X SS) (24"W X 24"H X 12"D MIN SIZE PER NEC)

GENERATORS NO.1A & 1B ELECTRICAL PLAN

SCALE: 1/4"=1'-0"

1 0 1 2 3 7'

CONSTRUCTION DOCUMENTS

10620 GRIFFIN ROAD, SUITE 202
COOPER CITY, FLORIDA 33328
PHONE: (954) 448-7930
C.O.A. NO. 6783
Stephen E. Bailey, P.E.
Florida P.E. No. 42461

No.	REVISIONS	DATE	BY

Kimley»Horn

PROFESSIONAL ENGINEER
STEPHEN E. BAILEY
2122-E
VIRGIN ISLANDS

KHA PROJECT	045826000
DATE	JUNE 2026
SCALE	AS SHOWN
DESIGNED BY	JPL
DRAWN BY	FAD
CHECKED BY	SEB

GENERATORS NO.1A & 1B ELECTRICAL PLAN

LBJ PUMP STATION
PREPARED FOR
VIWMA

SHEET NUMBER
E-16

This document, together with the concepts and designs presented herein, as an instrument of service, is intended only for the specific purpose and client for which it was prepared. Reuse of and improper reliance on this document without written authorization and adaptation by Kimley-Horn and Associates, Inc. shall be without liability to Kimley-Horn and Associates, Inc.

X:\Active Projects\Kimley Horn\Virgin Islands\06_100% Redesign\Dwgs\E-16 GEN ELEC PLAN.dwg, 6/29/2026 4:07:08 PM, mthompson

PANEL: L1 | **BUS:** 225 AMP | **VOLT:** 120/208V,3ø,4W
LOCATION: ELECTRICAL ROOM | **MAINS:** 125A,3P | **REMARKS:** PROVIDE SPD
MOUNTING: SURFACE | **POLES:** 54 | **A.I.C. SYMM:** 10,000

AMPS	POLE	WIRE	GND.	COND.	LOAD SERVED	BUS KVA A	BUS KVA B	BUS KVA C	BUS A B C		BUS KVA A	BUS KVA B	BUS KVA C	LOAD SERVED	WIRE	GND.	COND.	POLE	AMPS
20	1	12	12	3/4"	PCP–1A	0.30			1	2	0.30			PCP–1B	12	12	3/4"	1	20
20	1	12	12	3/4"	RTU		0.30		3	4		0.50		BUCP	12	12	3/4"	1	20
20	1	12	12	3/4"	FIT LP1010			0.10	5	6			1.00	UTILITY POINT OF DEMARC (SCADA)	12	12	3/4"	1	20
20	1	12	12	3/4"	MLS–LCP–1	1.00			7	8	1.00			MLS–LCP–2	12	12	3/4"	1	20
20	1	12	12	3/4"	LIT LP0121		0.10		9	10		0.10		LIT LP0122	12	12	3/4"	1	20
20	1	12	12	3/4"	LIT LP0123–A1			0.10	11	12			0.10	LIT–0123–B2	12	12	3/4"	1	20
20	1	12	12	3/4"	FIT LP0124	0.10			13	14	0.10			FIT LP0126	12	12	3/4"	1	20
20	1	12	12	3/4"	RCP–1A		0.30		15	16		0.30		RCP–1B	12	12	3/4"	1	20
20	1	12	12	3/4"	SHUNT TRIP			0.10	17	18			0.10	LIT LPXXX1	12	12	3/4"	1	20
20	1	12	12	3/4"	LIT LPXXX0	–			19	20	–			SPARE	–	–	–	1	20
20	1	–	–	–	SPARE		–		21	22		–		SPARE	–	–	–	1	20
20	1	–	–	–	SPARE			–	23	24			–	SPARE	–	–	–	1	20
20	1	–	–	–	SPARE	–			25	26	–			SPARE	–	–	–	1	20
20	1	–	–	–	SPARE		–		27	28		–		SPARE	–	–	–	1	20
20	1	–	–	–	SPARE			–	29	30			–	SPARE	–	–	–	1	20
20	1	–	–	–	SPARE	–			31	32	–			SPARE	–	–	–	1	20
20	1	–	–	–	SPARE		–		33	34		–		SPARE	–	–	–	1	20
20	1	–	–	–	SPARE			–	35	36			–	SPARE	–	–	–	1	20
20	1	–	–	–	SPARE	–			37	38	–			SPARE	–	–	–	1	20
–	–	–	–	–	SPACE		–		39	40		–		SPACE	–	–	–	–	–
–	–	–	–	–	SPACE			–	41	42			–	SPACE	–	–	–	–	–
–	–	–	–	–	SPACE	–			43	44	–			SPACE	–	–	–	–	–
–	–	–	–	–	SPACE		–		45	46		–		SPACE	–	–	–	–	–
–	–	–	–	–	SPACE			–	47	48			–	SPACE	–	–	–	–	–
60	3	6	8	1"	PC1	–			49	50	0.10			SPD	6	8	–	3	40
–	–	–	–	–	–		–		51	52		0.10		–	–	–	–	–	–
–	–	–	–	–	–			–	53	54			0.10	–	–	–	–	–	–
TOTAL (PHASE):						1.50	0.70	0.30			1.50	1.00	1.30	**NOTES:**					
TOTAL KVA:									6.30					–					
TOTAL AMPS:									17.49										
TOTAL DEMAND AMPS:									17.49										

SCHNEIDER ELECTRIC SURGELOGIC EMB SERIES OR APPROVED EQUAL → SPD

PANEL: PC1 | **BUS:** 100 AMP RATED | **VOLT:** 120/208V,3ø,4W
LOCATION: ELECTRICAL ROOM | **MAINS:** 60A,3P MB (2 TOTAL) | **REMARKS:** PROVIDE SPD
MOUNTING: SURFACE | **POLES:** 48 | **A.I.C. SYMM:** 10,000

AMPS	POLE	WIRE	GND.	COND.	LOAD SERVED	BUS KVA A	BUS KVA B	BUS KVA C	BUS A B C		BUS KVA A	BUS KVA B	BUS KVA C	LOAD SERVED	WIRE	GND.	COND.	POLE	AMPS
					PC2A									PC2A					
50	3	–	–	–	MB	–			1	2	0.10			PHOTOCELL	12	12	3/4"	1	20
–	–	–	–	–	–		–		3	4		0.90		N. SITE POLE RECEPT	12	12	3/4"	1	20
–	–	–	–	–	–			–	5	6			1.08	S. SITE POLE RECEPT	12	12	3/4"	1	20
–	–	–	–	–	SPARE	–			7	8	0.54			MLS POLE RECEPT	12	12	3/4"	1	20
–	–	–	–	–	SPARE		–		9	10		–		SPARE	–	–	–	1	20
–	–	–	–	–	SPARE			–	11	12			–	SPARE	–	–	–	1	20
–	–	–	–	–	SPARE	–			13	14	–			SPARE	–	–	–	1	20
–	–	–	–	–	SPACE		–		15	16		–		SPACE	–	–	–	1	20
–	–	–	–	–	SPACE			–	17	18			–	SPACE	–	–	–	1	20
–	–	–	–	–	SPACE	–			19	20	–			SPACE	–	–	–	1	20
–	–	–	–	–	SPACE		–		21	22		–		SPACE	–	–	–	–	–
–	–	–	–	–	SPACE			–	23	24			–	SPARE	–	–	–	–	–
–	–	–	–	–	SPACE	–			25	26	0.10			SPD	10	10	–	3	30
–	–	–	–	–	SPACE		–		27	28		0.10		–	–	–	–	–	–
–	–	–	–	–	SPACE			–	29	30			0.10	–	–	–	–	–	–
					PC2B									PC2B					
50	1	–	–	–	MB	–			31	32	0.35			N. SITE LTG POLE	12	12	3/4"	1	20
–	–	–	–	–	–		–		33	34		0.42		S. SITE LTG POLE	12	12	3/4"	1	20
–	–	–	–	–	–			–	35	36			0.21	MLS LTG POLE	12	12	3/4"	1	20
20	1	12	12	3/4"	S. SITE LTG POLE	0.30			37	38	–			SPARE	–	–	–	1	20
20	1	–	–	–	SPARE		–		39	40		–		SPARE	–	–	–	1	20
–	–	–	–	–	SPACE			–	41	42			–	SPACE	–	–	–	–	–
–	–	–	–	–	SPACE	–			43	44	0.10			SPD	10	10	–	3	30
–	–	–	–	–	SPACE		–		45	46		0.10		–	–	–	–	–	–
–	–	–	–	–	SPACE			–	47	48			0.10	–	–	–	–	–	–
TOTAL (PHASE):						0.30	–	–			1.18	1.52	1.49	**NOTES:**					
TOTAL KVA:									4.49										
TOTAL AMPS:									12.46										
TOTAL DEMAND AMPS/(KVA):									12.46										

SPD ← SCHNEIDER ELECTRIC SURGELOGIC EMB SERIES OR APPROVED EQUAL → SPD

CONSTRUCTION DOCUMENTS

10620 GRIFFIN ROAD, SUITE 202
COOPER CITY, FLORIDA 33328
PHONE: (954) 448–7930
C.O.A. NO. 6783
Stephen E. Bailey, P.E.
Florida P.E. No. 42461

No.	REVISIONS	DATE	BY

Kimley»Horn

PROFESSIONAL ENGINEER
STEPHEN E. BAILEY
2122–E
U.S. VIRGIN ISLANDS

KHA PROJECT 045826000
DATE JUNE 2026
SCALE AS SHOWN
DESIGNED BY JPL
DRAWN BY FAD
CHECKED BY SEB

PANEL SCHEDULES

LBJ PUMP STATION
PREPARED FOR
VIWMA

SHEET NUMBER
E-17

This document, together with the concepts and designs presented herein, as an instrument of service, is intended only for the specific purpose and client for which it was prepared. Reuse of and improper reliance on this document without written authorization and adaptation by Kimley-Horn and Associates, Inc. shall be without liability to Kimley-Horn and Associates, Inc.

X:\Active Projects\Kimley-Horn\Virgin Islands\06_100% Redesign\Dwgs\E-17 PNL SCHED.dwg, 6/29/2026 4:01:12 PM, mthompson

This document, together with the concepts and designs presented herein, as an instrument of service, is intended only for the specific purpose and client for which it was prepared. Reuse of and improper reliance on this document without written authorization and adaptation by Kimley-Horn and Associates, Inc. shall be without liability to Kimley-Horn and Associates, Inc.

NOTES:

1. POLE MTD. LED LIGHTING FIXTURE. W.P., BUGTIGHT, GASKETED DIE CAST WITH DARK BRONZE POWDER COAT FINISH, INTEGRAL PHOTOCELL, 166W MULTI-TAP INTEGRAL BALLAST WITH 40 LEDS, 1300MA DRIVE CURRENT 3000K COLOR TEMPERATURE.FORWARD P7 OPTICS 18377 LUMENS MANUFACTURED BY LITHONIA LIGHTING, D-SERIES SIZE 0, NO EQUAL. TYPE I SHORT DISTRIBUTION.
2. ROUND TAPERED ALUMINUM POLE. ALLOY 6063-T6 HAPCO RTA SERIES. CONTRACTOR TO PROVIDE STRUCTURAL POLE AND FOOTING DETAILED DRAWINGS INCLUDING WIND LOAD CALCULATIONS SIGNED AND SEALED BY A STATE OF FLORIDA STRUCTURAL ENGINEER. CALCULATIONS SHALL BE IN ACCORDANCE WITH THE FLORIDA BUILDING CODE.
3. DETAIL IS NOT INTENDED AS AN INSTALLATION DETAIL, CONTRACTOR TO CONFIRM INSTALLATION REQUIREMENTS BASED ON STRUCTURAL CALCULATIONS, SEE NOTE ABOVE.

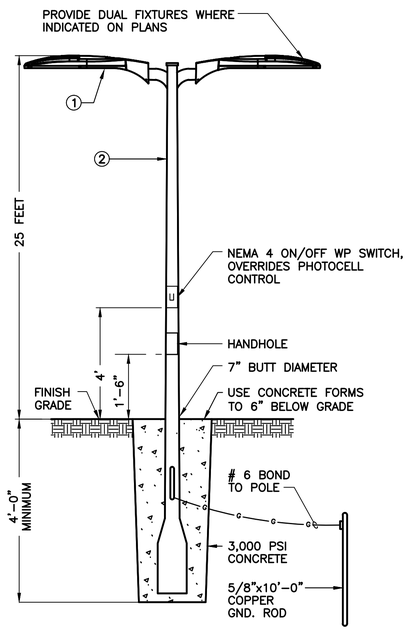

1 TYP. POLE MOUNTED TYPE 'A' FIXTURE DETAIL

N.T.S.

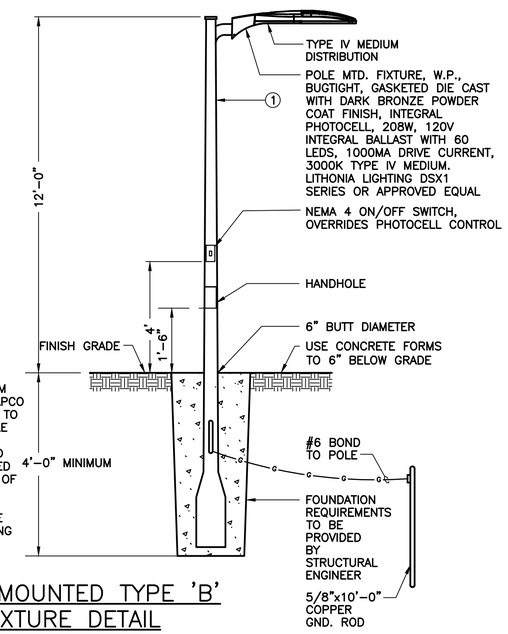

NOTES:

1. ROUND TAPERED ALUMINUM POLE. ALLOY 6063-T6 HAPCO RTA SERIES. CONTRACTOR TO PROVIDE STRUCTURAL POLE AND FOOTING DETAILED DRAWINGS INCLUDING WIND LOAD CALCULATIONS SIGNED AND SEALED BY A STATE OF FLORIDA STRUCTURAL ENGINEER. CALCULATIONS SHALL BE IN ACCORDANCE WITH THE FLORIDA BUILDING CODE.

2 TYP. POLE MOUNTED TYPE 'B' FIXTURE DETAIL

N.T.S.

CONSTRUCTION DOCUMENTS

10620 GRIFFIN ROAD, SUITE 202
COOPER CITY, FLORIDA 33328
PHONE: (954) 448-7930
C.O.A. NO. 6783
Stephen E. Bailey, P.E.
Florida P.E. No. 42461

No.	REVISIONS	DATE	BY

Kimley»Horn

PROFESSIONAL ENGINEER
STEPHEN E. BAILEY
2122-E
U.S. VIRGIN ISLANDS

KHA PROJECT 045826000	
DATE	JUNE 2026
SCALE	AS SHOWN
DESIGNED BY	JPL
DRAWN BY	FAD
CHECKED BY	SEB

LIGHTING FIXTURE SCHEDULE & DETAILS

LBJ PUMP STATION
PREPARED FOR
VIWMA

SHEET NUMBER
E-18

X:\Active Projects\Kimley Horn\Virgin Islands\06_100% Redesign\Dwgs\E-18 LTG SCHED & DTLS.dwg 6/29/2026 4:01:14 PM mthompson

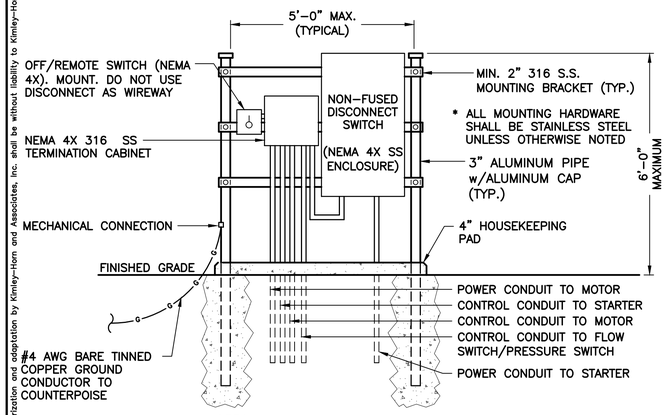

NOTES:

1. RACK STRUCTURE TO BE CERTIFIED PER THE FLORIDA BUILDING CODE. CONTRACTOR SHALL SUBMIT SIGNED AND SEALED WIND LOAD CALCULATIONS FROM A STRUCTURAL ENGINEER LICENSED IN THE STATE OF FLORIDA.

1 TYP. DISCONNECT/HOA EQUIPMENT RACK DETAIL

N.T.S.

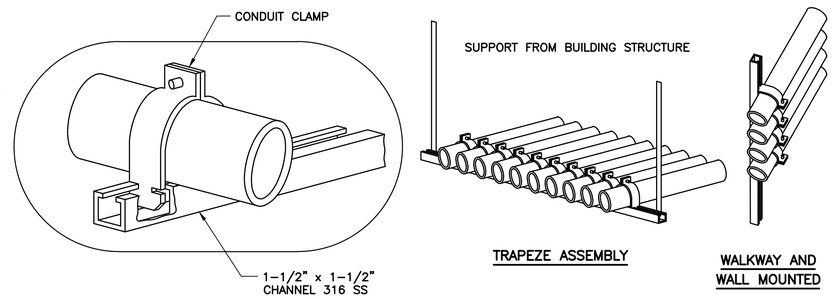

2 TYP. CONDUIT PIPE STRAP MOUNTING DETAILS

N.T.S.

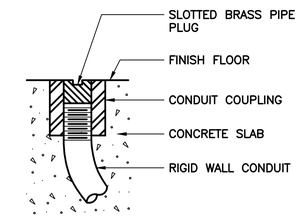

3 TYP. DETAIL OF CONDUIT TERMINATION STUB OUT

N.T.S.

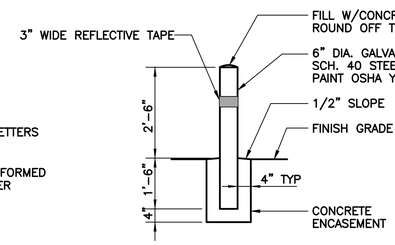

6 TYP. BOLLARD POST DETAIL

N.T.S.

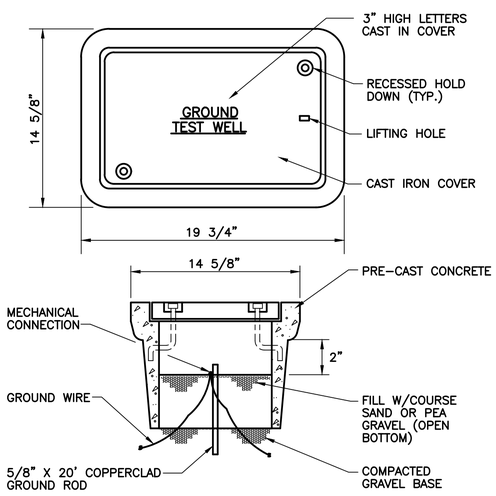

4 TYP. GROUND TEST WELL

N.T.S.

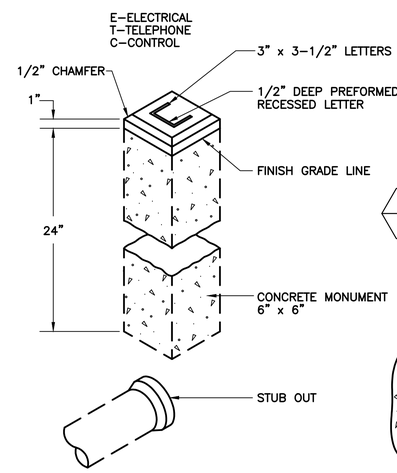

5 TYP. CONDUIT STUB MONUMENT DETAILS

N.T.S.

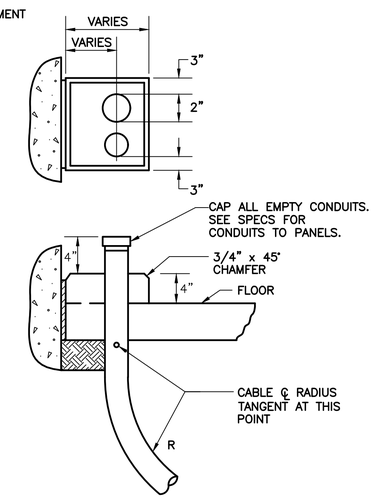

7 TYP. TYPICAL CONDUIT THRU SLAB

N.T.S.

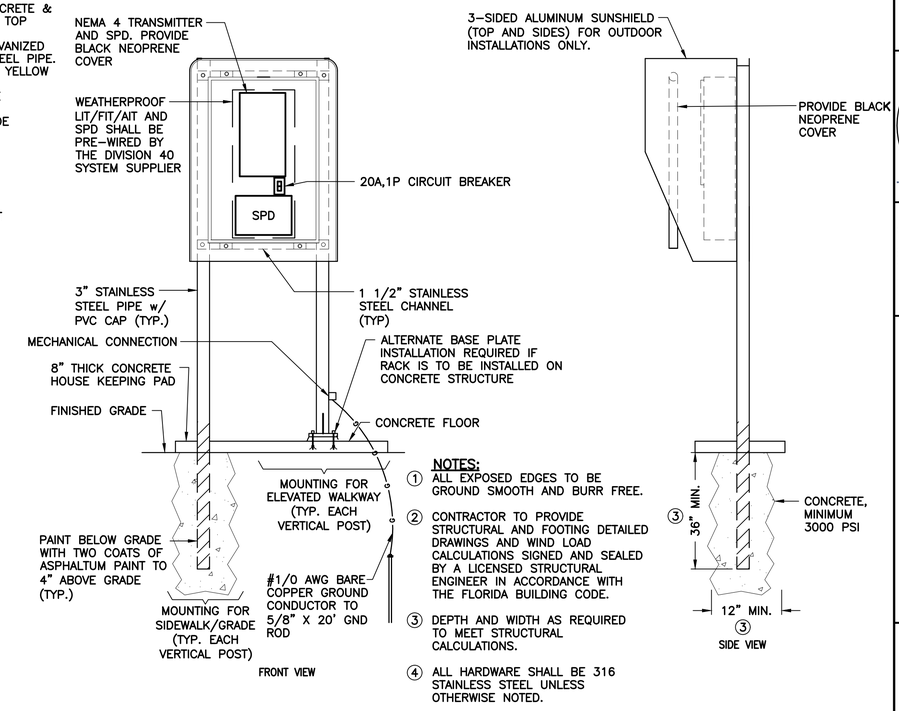

NOTES:

1. ALL EXPOSED EDGES TO BE GROUND SMOOTH AND BURR FREE.
2. CONTRACTOR TO PROVIDE STRUCTURAL AND FOOTING DETAILED DRAWINGS AND WIND LOAD CALCULATIONS SIGNED AND SEALED BY A LICENSED STRUCTURAL ENGINEER IN ACCORDANCE WITH THE FLORIDA BUILDING CODE.
3. DEPTH AND WIDTH AS REQUIRED TO MEET STRUCTURAL CALCULATIONS.
4. ALL HARDWARE SHALL BE 316 STAINLESS STEEL UNLESS OTHERWISE NOTED.

8 TYP. TRANSMITTER MOUNTING DETAIL

SCALE: N.T.S.

CONSTRUCTION DOCUMENTS

10620 GRIFFIN ROAD, SUITE 202
COOPER CITY, FLORIDA 33328
PHONE: (954) 448-7930
C.O.A. NO. 6783
Stephen E. Bailey, P.E.
Florida P.E. No. 42461

No.	REVISIONS	DATE	BY

Kimley»Horn

PROFESSIONAL ENGINEER STEPHEN E. BAILEY 2122-E VIRGIN ISLANDS

KHA PROJECT	045826000
DATE	JUNE 2026
SCALE	AS SHOWN
DESIGNED BY	JPL
DRAWN BY	FAD
CHECKED BY	SEB

ELECTRICAL DETAILS-1

LBJ PUMP STATION
PREPARED FOR
VIWMA

SHEET NUMBER
E-19

This document, together with the concepts and designs presented herein, as an instrument of service, is intended only for the specific purpose and client for which it was prepared. Reuse of and improper reliance on this document without written authorization and adaptation by Kimley-Horn and Associates, Inc. shall be without liability to Kimley-Horn and Associates, Inc.

X:\Active Projects\Kimley Horn\Virgin Islands\06_100% Redesign\Dwgs\E-19 ELEC DTLS-1.dwg, 6/29/2026 4:01:16 PM, mthompson

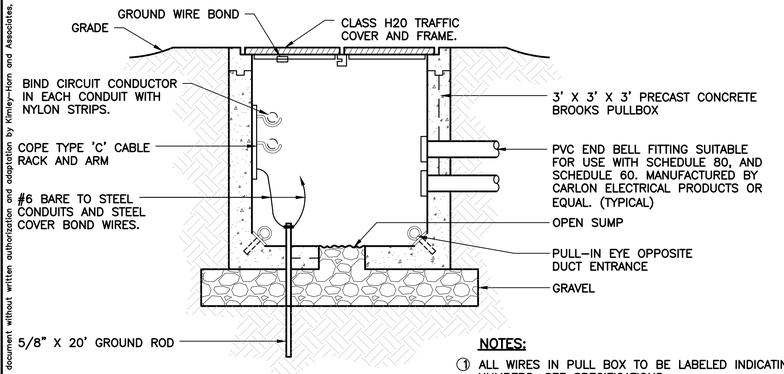

NOTES:

1. ALL WIRES IN PULL BOX TO BE LABELED INDICATING CIRCUIT NUMBERS. SEE SPECIFICATIONS.
2. DO NOT SPLICE CABLES IN PULL BOXES UNLESS OTHERWISE NOTED.
3. PATCH CONDUIT ENTRY WINDOW WITH CONCRETE.

1 TYP. CONTROL PULL BOX DETAIL

N.T.S.

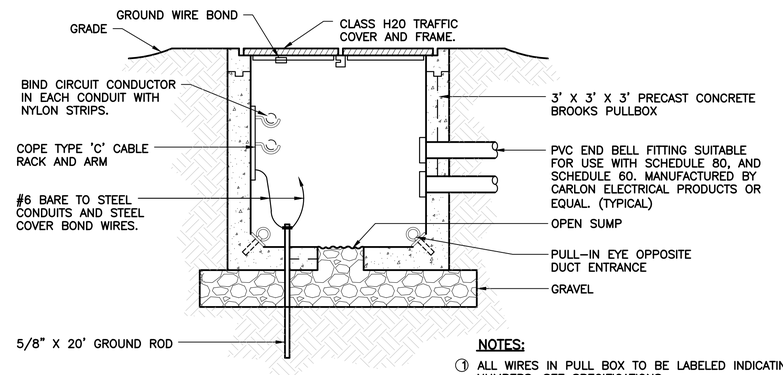

NOTES:

1. ALL WIRES IN PULL BOX TO BE LABELED INDICATING CIRCUIT NUMBERS. SEE SPECIFICATIONS.
2. DO NOT SPLICE CABLES IN PULL BOXES UNLESS OTHERWISE NOTED.
3. PATCH CONDUIT ENTRY WINDOW WITH CONCRETE.

2 TYP. POWER MANHOLE DETAIL

N.T.S.

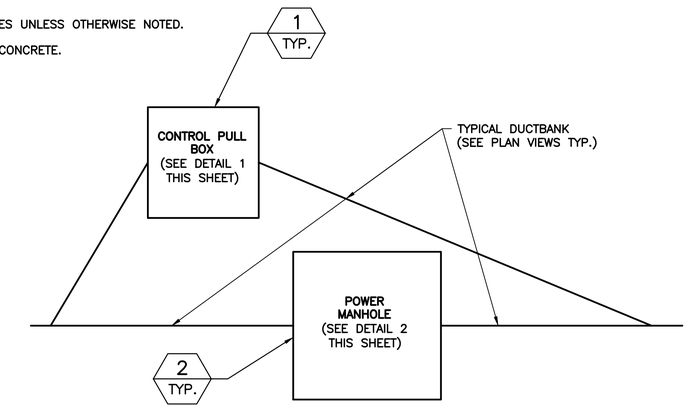

3 TYP. CONTROL PULLBOX & POWER MANHOLE DETAIL

N.T.S.

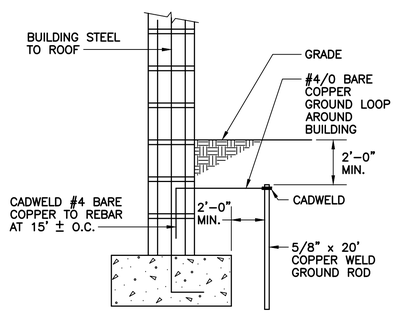

4 TYP. BUILDING STRUCTURE BONDING

N.T.S.

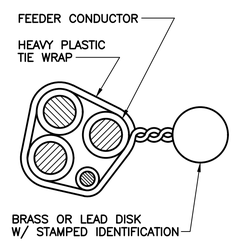

5 TYP. U.G. CABLE TAG DETAIL

N.T.S.

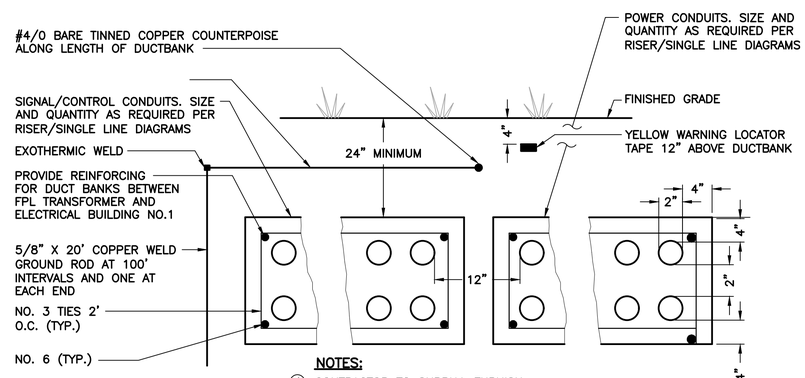

NOTES:

1. CONTRACTOR TO SUPPLY, FURNISH AND INSTALL 'TRACKER' BALL DEVICE AT 100' INTERVALS, CHANGE OF DIRECTION AND ONE AT EACH END OF EVERY RUN.
2. ALL CONDUITS TO BE CONCRETE ENCASED.

6 TYP. TYPICAL CONCRETE ENCASED DUCTBANK CONDUIT SECTION

N.T.S.

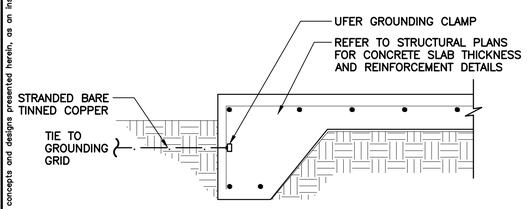

7 TYP. CONCRETE SLAB GROUNDING DETAIL

N.T.S.

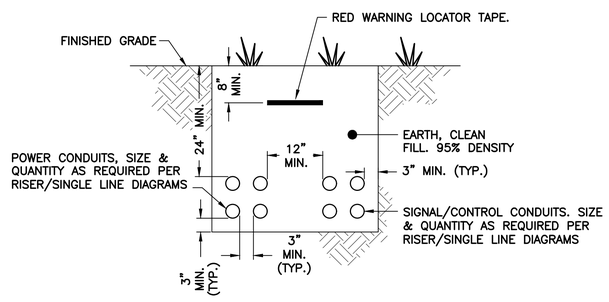

8 TYP. TYPICAL DIRECT BURIED CONDUIT DUCTBANK SECTION

SCALE: N.T.S.

CONSTRUCTION DOCUMENTS

10620 GRIFFIN ROAD, SUITE 202
COOPER CITY, FLORIDA 33328
PHONE: (954) 448-7930
C.O.A. NO. 6783
Stephen E. Bailey, P.E.
Florida P.E. No. 42461

No.	REVISIONS	DATE	BY

Kimley»Horn

PROFESSIONAL ENGINEER
STEPHEN E. BAILEY
2122-E
VIRGIN ISLANDS

KHA PROJECT 045826000
DATE JUNE 2026
SCALE AS SHOWN
DESIGNED BY JPL
DRAWN BY FAD
CHECKED BY SEB

ELECTRICAL DETAILS-2

LBJ PUMP STATION
PREPARED FOR VIWMA

SHEET NUMBER
E-20

This document, together with the concepts and designs presented herein, as an instrument of service, is intended only for the specific purpose and client for which it was prepared. Reuse of and improper reliance on this document without written authorization and adaptation by Kimley-Horn and Associates, Inc. shall be without liability to Kimley-Horn and Associates, Inc.

X:\Active Projects\Kimley Horn\Virgin Islands\06_ 100% Redesign\Dwgs\E-20 ELEC DTLS-2.dwg, 6/29/2026 4:01:19 PM, mthompson

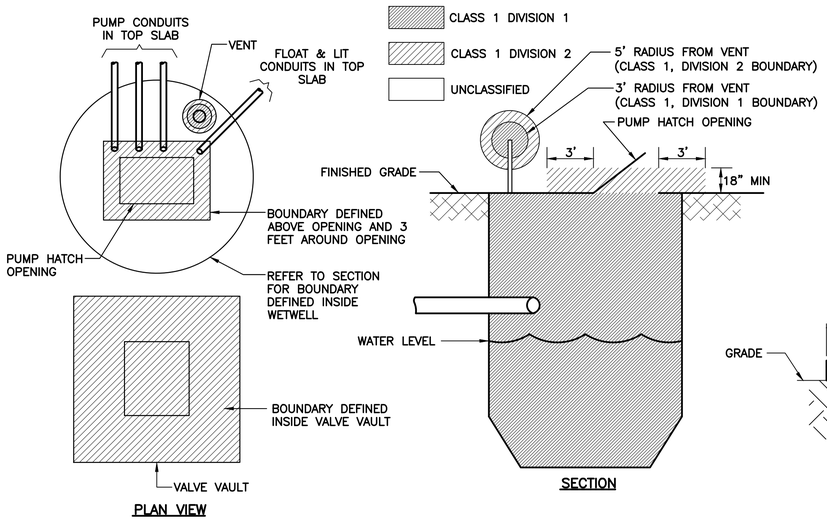

1 TYP. BOUNDARY CLASSIFICATION

N.T.S.

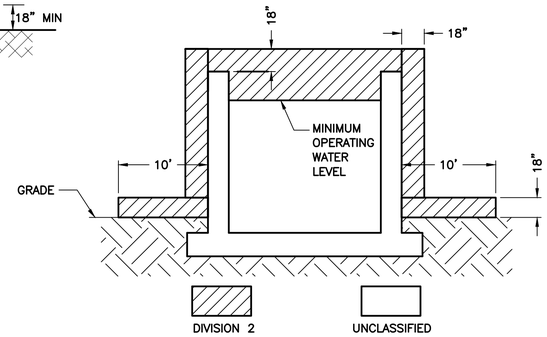

2 TYP. HAZARDOUS CLASSIFICATION BOUNDARIES

NTS

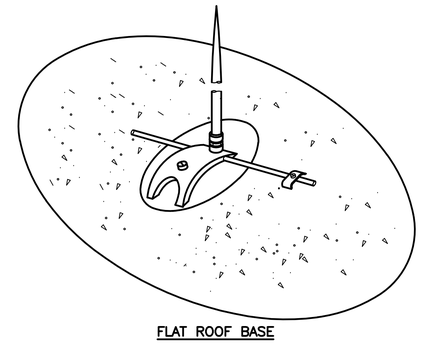

3 TYP. AIR TERMINAL DETAILS

N.T.S.

LEGEND:

- △ – 5/8" X 12" SOLID COPPER AIR TERMINAL WITH ADHESIVE BASE.
- ● – CADWELD
- ⊗ – 5/8" X 20'–0" (MIN) COPPER GROUNDING ROD (TYP)

LIGHTNING PROTECTION INSTALLATION NOTES:

1. INSTALLATION SHALL COMPLY IN ALL RESPECTS TO L.P.I. CODE 175. INSTALLATION SHALL BE MADE BY OR UNDER THE SUPERVISION OF AN L.P.I. CERTIFIED MASTER INSTALLER. COMPLETED INSTALLATION TO RECEIVE SYSTEM CERTIFICATION INCLUDING SUBMITTAL OF FORMS L.P.I. 175–A AND 175–B.
2. ALL MATERIALS SHALL BE UNDERWRITERS LABORATORIES APPROVED WITH "A" LABEL ON EACH AIR TERMINAL AND "B" LABEL AT 10'–0" ALONG ALL MAIN CONDUCTORS. COMPLETED INSTALLATION AS SHOWN SHALL BEAR U.L. MASTER LABEL "C" AS PER U.L. CODE 96A.
3. INTERCONNECT LIGHTNING PROTECTION GROUND TO ELECTRIC, TELEPHONE, AND OTHER BUILDING GROUND SYSTEMS AS SHOWN OR AS REQUIRED BY CODES.
4. ALL CABLE TO CABLE, CABLE TO LUG & CABLE TO GROUND ROD CONNECTIONS SHALL BE MADE WITH CADWELD.

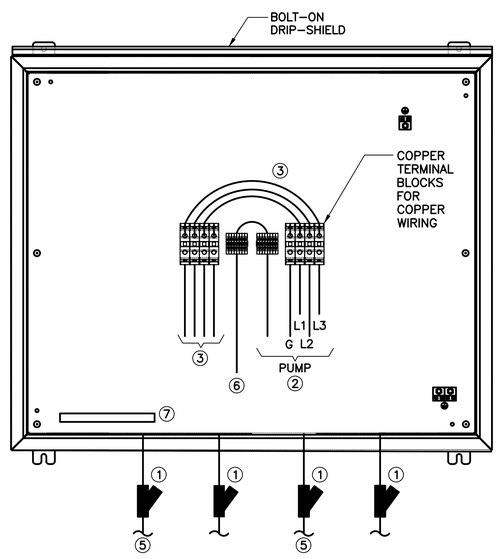

4 TYP. POWER TERMINATION CABINET (PTC)

N.T.S.

JBOX ENCLOSURE:

NEMA 4X RATED, W/DRIP SHIELD. FABRICATED FROM TYPE 316 STAINLESS STEEL, POLISHED FINISH. OUTER DOOR HAS 3–POINT PAD–LOCKABLE HANDLE.

BACK PANEL:

FABRICATED FROM 12ga. STEEL WITH WHITE POLYESTER POWDER COAT FINISH.

NOTES:

1. EATON CROUSE HINDS EYS FITTING. CONDUIT TO WETWELL.
2. COPPER WIRE TO LSCP.
3. 24V AC CONTROL TERMINAL BLOCK
4. TERMINAL BOX GROUND BAR.

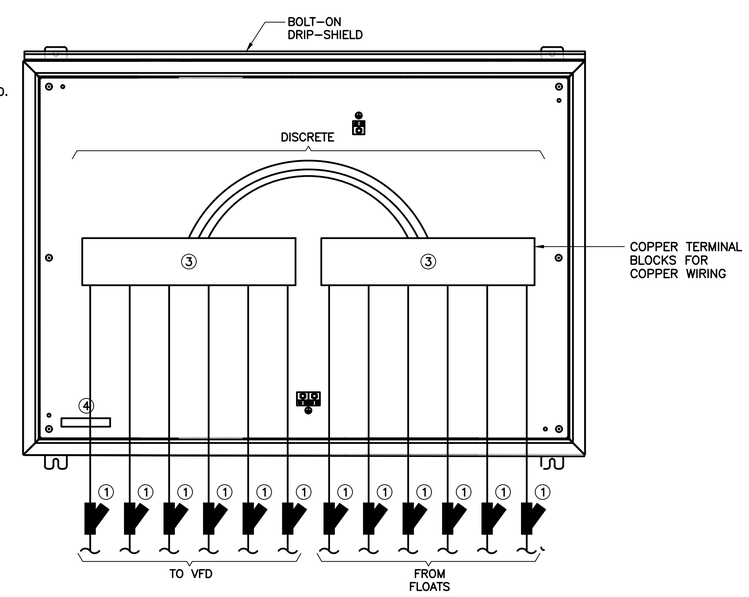

5 TYP. CONTROL TERMINATION CABINET (CTC–1)

N.T.S.

CONSTRUCTION DOCUMENTS

10620 GRIFFIN ROAD, SUITE 202
COOPER CITY, FLORIDA 33328
PHONE: (954) 448–7930
C.O.A. NO. 6783
Stephen E. Bailey, P.E.
Florida P.E. No. 42461

No.	REVISIONS	DATE	BY

Kimley»Horn

PROFESSIONAL ENGINEER
STEPHEN E. BAILEY
2122–E
U.S. VIRGIN ISLANDS

KHA PROJECT 045826000	
DATE	JUNE 2026
SCALE	AS SHOWN
DESIGNED BY	JPL
DRAWN BY	FAD
CHECKED BY	SEB

ELECTRICAL DETAILS-3

LBJ PUMP STATION PREPARED FOR VIWMA

SHEET NUMBER
E-21

This document, together with the concepts and designs presented herein, as an instrument of service, is intended only for the specific purpose and client for which it was prepared. Reuse of and improper reliance on this document without written authorization and adaptation by Kimley-Horn and Associates, Inc. shall be without liability to Kimley-Horn and Associates, Inc.

X:\Active Projects\Kimley Horn\Virgin Islands\06_ 100% Redesign\Dwgs\E-21 ELEC DTLS-3.dwg, 6/29/2026 4:01:21 PM, mthompson

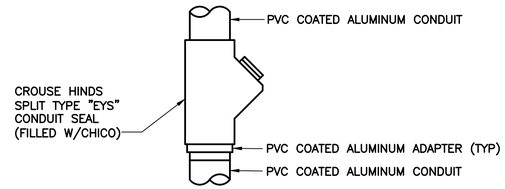

1 TYP. SEAL–OFF FITTING DETAIL
N.T.S.

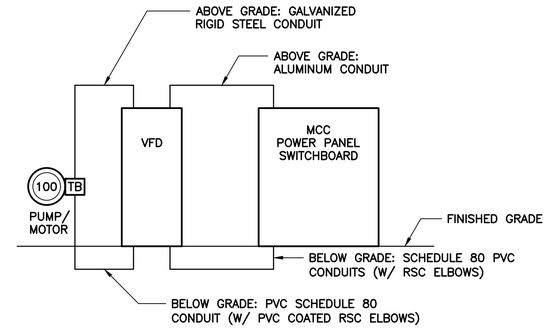

2 TYP. TYPICAL VFD CONDUIT DETAIL SCHEME
N.T.S.

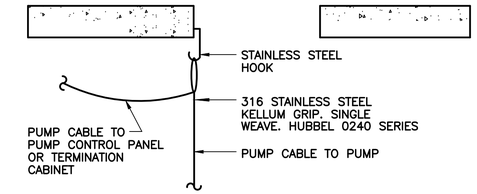

3 TYP. PUMP CABLE MOUNTING DETAIL
N.T.S.

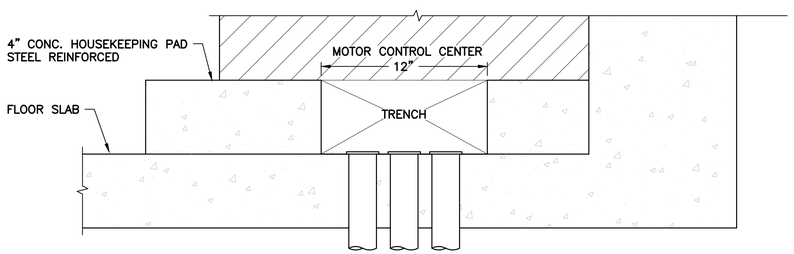

4 TYP. TYPICAL EQUIPMENT TRENCH DETAIL
N.T.S.

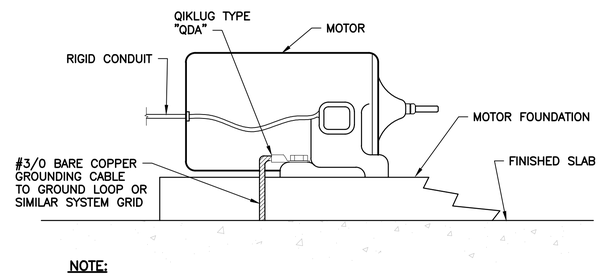

NOTE:
THIS GROUND IS IN ADDITION TO THE GROUND FROM THE MAIN ELECTRICAL SERVICE.

5 TYP. EQUIPMENT GROUNDING DETAIL
N.T.S.

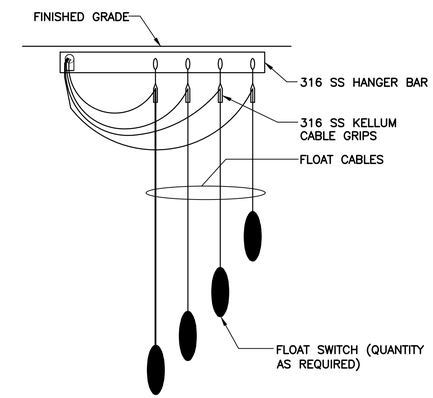

6 TYP. FLOAT SWITCH MOUNTING DETAIL
N.T.S.

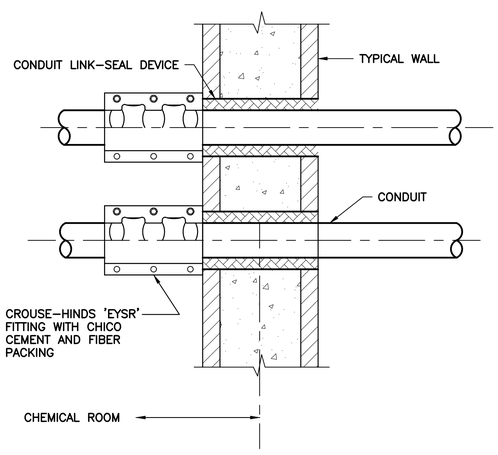

7 TYP. WALL PENETRATION DETAIL
N.T.S.

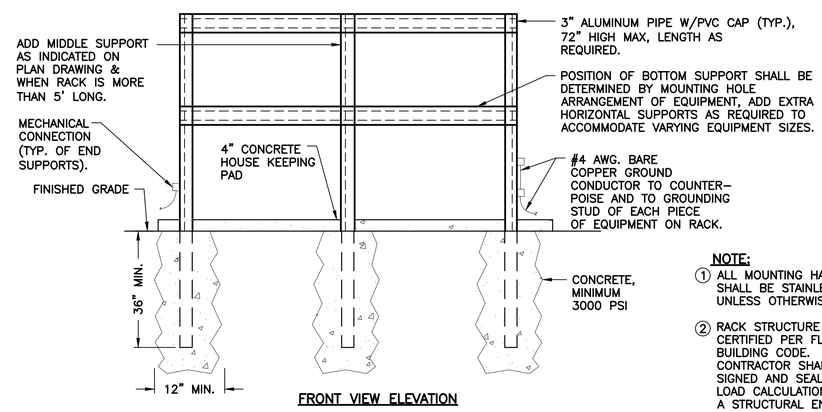

FRONT VIEW ELEVATION

NOTE:
1. ALL MOUNTING HARDWARE SHALL BE STAINLESS STEEL, UNLESS OTHERWISE NOTED.
2. RACK STRUCTURE TO BE CERTIFIED PER FLORIDA BUILDING CODE. CONTRACTOR SHALL SUBMIT SIGNED AND SEALED WIND LOAD CALCULATIONS FROM A STRUCTURAL ENGINEER LICENSED IN THE STATE OF FLORIDA.

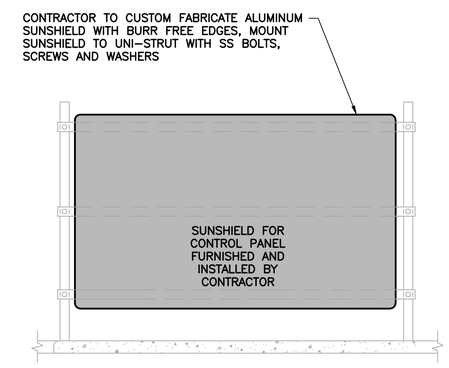

REAR VIEW ELEVATION

8 TYP. TYPICAL EQUIPMENT RACK DETAIL
N.T.S.

CONSTRUCTION DOCUMENTS

10620 GRIFFIN ROAD, SUITE 202
COOPER CITY, FLORIDA 33328
PHONE: (954) 448–7930
C.O.A. NO. 6783
Stephen E. Bailey, P.E.
Florida P.E. No. 42461

No.	REVISIONS	DATE	BY

Kimley»Horn

PROFESSIONAL ENGINEER
STEPHEN E. BAILEY
2122–E
U.S. VIRGIN ISLANDS

KHA PROJECT 045826000
DATE JUNE 2026
SCALE AS SHOWN
DESIGNED BY JPL
DRAWN BY FAD
CHECKED BY SEB

ELECTRICAL DETAILS-4

LBJ PUMP STATION
PREPARED FOR
VIWMA

SHEET NUMBER
E-22

This document, together with the concepts and designs presented herein, as an instrument of service, is intended only for the specific purpose and client for which it was prepared. Reuse of and improper reliance on this document without written authorization and adaptation by Kimley–Horn and Associates, Inc. shall be without liability to Kimley–Horn and Associates, Inc.

X:\Active Projects\Kimley-Horn\Virgin Islands\06_100% Redesign\Dwgs\E-22 ELEC DTLS-4.dwg, 6/29/2026 4:01:24 PM, mthompson

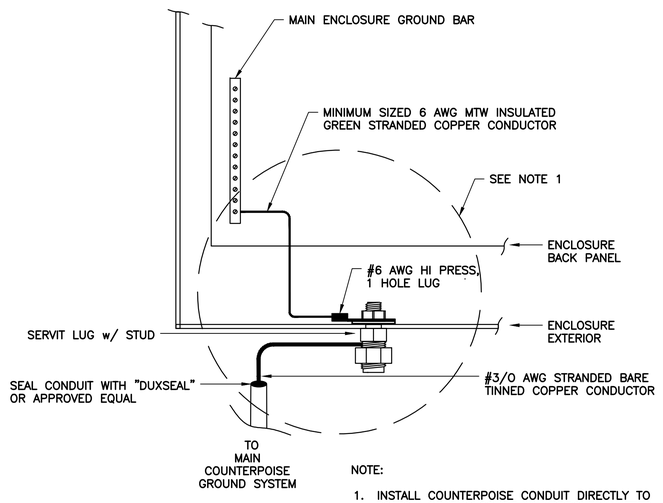

NOTE:

1. INSTALL COUNTERPOISE CONDUIT DIRECTLY TO BOTTOM OF ENCLOSURE IN APPROVED MATTER AND CONNECT COUNTERPOISE CONDUCTOR TO MANUFACTURER'S DESIGNATED GROUNDING BAR.

1 TYP. CONTROL, JUNCTION AND INSTRUMENT PEDESTAL ENCLOSURES GROUNDING DETAIL

NOT TO SCALE

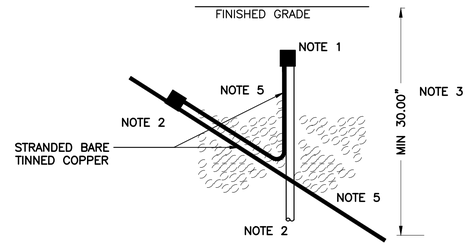

1. GROUND ROD TO COUNTERPOISE CONDUCTOR SHALL BE CONNECTED BY MEANS OF A EXOTHERMIC WELD. GROUND ROD SHALL BE 5/8 INCH IN DIAMETER AND 20 FOOT LENGTH MINIMUM.
2. COUNTERPOISE CONDUCTOR TO CONDUCTOR CONNECTION SHALL BE CONNECTED BY MEANS OF EXOTHERMIC WELD AND THE CONDUCTOR FROM COUNTERPOISE LENGTH TO GROUND ROD SHALL HAVE A MINIMUM OF 36 INCHES.
3. UNDERGROUND INSTALLATION OF COUNTERPOISE SYSTEM SHALL BE BURIED AT A MINIMUM DEPTH OF 30 INCHES.
4. ALL COMPONENTS USED IN INSTALLATION WITHIN SHALL COMPLY WITH SPECIFICATION 260526.
5. STRANDED BARE TINNED COPPER CONDUCTOR

2 TYP. COUNTERPOISE GROUND ROD CONNECTION DETAIL

NOT TO SCALE

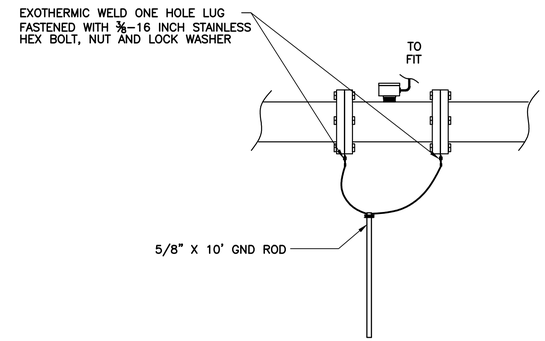

3 TYP. FLOW METER PIPE GROUNDING DETAIL

N.T.S.

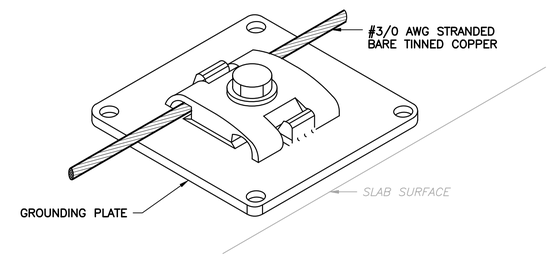

4 TYP. GROUNDING PLATE DETAIL

NOT TO SCALE

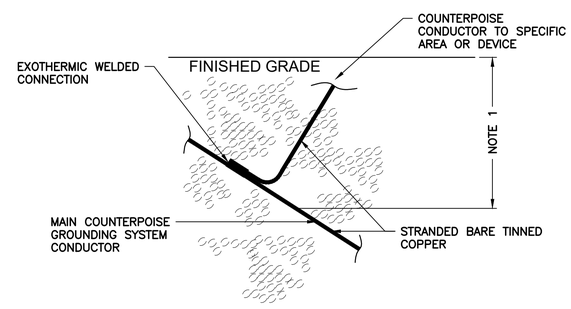

1. UNDERGROUND INSTALLATION OF COUNTERPOISE SYSTEM SHALL BE BURIED AT A MINIMUM DEPTH OF 30 INCHES.
2. ALL COMPONENTS USED IN INSTALLATION WITHIN SHALL COMPLY WITH SPECIFICATION 260526.

6 TYP. COUNTERPOISE CONDUCTOR CONNECTION DETAIL

NOT TO SCALE

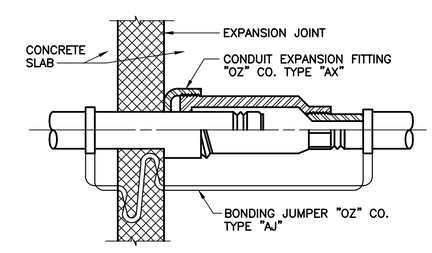

7 TYP. EXPANSION FITTING DETAIL

CONSTRUCTION DOCUMENTS

10620 GRIFFIN ROAD, SUITE 202
COOPER CITY, FLORIDA 33328
PHONE: (954) 448-7930
C.O.A. NO. 6783
Stephen E. Bailey, P.E.
Florida P.E. No. 42461

No.	REVISIONS	DATE	BY

Kimley»Horn

PROFESSIONAL ENGINEER STEPHEN E. BAILEY 2122-E VIRGIN ISLANDS

KHA PROJECT 045826000
DATE JUNE 2026
SCALE AS SHOWN
DESIGNED BY JPL
DRAWN BY FAD
CHECKED BY SEB

ELECTRICAL DETAILS-5

LBJ PUMP STATION
PREPARED FOR VIWMA

SHEET NUMBER
E-23

This document, together with the concepts and designs presented herein, as an instrument of service, is intended only for the specific purpose and client for which it was prepared. Reuse of and improper reliance on this document without written authorization and adaptation by Kimley-Horn and Associates, Inc. shall be without liability to Kimley-Horn and Associates, Inc.

X:\Active Projects\Kimley Horn\Virgin Islands\06_100% Redesign\Dwgs\E-23 ELEC DTLS-5.dwg, 6/29/2026 3:59:07 PM, mthompson

GENERAL INSTRUMENT OR FUNCTION SYMBOLS

- DISCRETE INSTRUMENT – FIELD MOUNTED
- DISCRETE INSTRUMENT – PRIMARY LOCATION NORMALLY ACCESSIBLE TO OPERATOR (1)
- DISCRETE INSTRUMENT – AUXILLARY LOCATION NORMALLY ACCESSIBLE TO OPERATOR (1)
- INSTRUMENTS SHARING COMMON HOUSING
- XXX EXISTING EQUIPMENT
- XXX FUTURE EQUIPMENT
- I CONTROL INTERLOCK
- A CONTROL SYSTEM I/O INTERFACE – ANALOG SIGNAL. DIRECTION OF TRIANGLE DENOTES WHETHER INPUT OR OUTPUT.
- D CONTROL SYSTEM I/O INTERFACE – DISCRETE SIGNAL. DIRECTION OF TRIANGLE DENOTES WHETHER INPUT OR OUTPUT.
- FIBER OPTIC CONNECTION
- DIAPHRAGM SEAL

PROCESS DEVICE SYMBOLS

- REDUCER OR ENLARGER
- PRIMARY ELEMENT VENTURI TUBE
- M PRIMARY ELEMENT MAGNETIC FLOWMETER
- PRIMARY ELEMENT ULTRASONIC DOPPLER FLOWMETER
- PRIMARY ELEMENT PARSCHALL FLUME
- PRIMARY ELEMENT ORIFICE PLATE
- PRIMARY ELEMENT WEIR FLOWMETER
- PRIMARY ELEMENT TURBINE OR PROPELLER TYPE METER
- PRIMARY ELEMENT PITOT TUBE
- PRIMARY ELEMENT ROTAMETER
- PRIMARY ELEMENT STRAP ON ULTRASONIC TRANSIT TIME METER
- PRIMARY ELEMENT STRAP ON ULTRASONIC DOPPLER METER
- PRIMARY ELEMENT ULTRASONIC FLOW OR LEVEL METER
- FLOAT SWITCH
- DRAIN
- CHEMICAL INJECTION POINT
- MIXER
- BCP BLOWER CONTROL PANEL

PROCESS DEVICE SYMBOLS (CONTINUED)

- VALVE: GLOBE OR OTHER IN–LINE TYPE, UNLESS OTHERWISE INDICATED.
- BUTTERFLY VALVE
- CHECK VALVE WITH FLOW DIRECTION AS INDICATED
- PLUG VALVE
- BALL VALVE
- REGULATED SIDE PRESSURE REGULATING VALVE – SELF CONTAINED
- FLOW CONTROL GATE OR GATE VALVE
- CENTRIFUGAL BLOWER
- CENTRIFUGAL PUMP
- M SUBMERSIBLE PUMP
- M DIAPHRAGM PUMP & MOTOR
- DISC FLOW OR PROGRESSIVE CAVITY PUMP
- VERTICAL PUMP
- M MOTOR – MAY BE ELECTRIC, HYDRAULIC, OR PNEUMATIC. ARROW DENOTES VARIABLE SPEED.

FUNCTION SYMBOLS & ABBREVIATIONS

- Σ SUMMING
- Σ/n AVERAGING
- Δ SUBTRACTING
- √ EXACT SQUARE ROOT
- ÷ DIVIDE
- x MULTIPLY
- S INTEGRATE
- + BIAS POSITIVE
- – BIAS NEGATIVE
- f(X) NONLINEAR OR UNSPECIFIED FUNCTION
- > HIGH SELECT
- < LOW SELECT
- HIGH LIMIT
- LOW LIMIT
- ✱/✱ SIGNAL TRANSDUCER OR CONVERTER (INPUT/OUTPUT)
  ✱ DEFINED AS FOLLOWS:
  - E VOLTAGE
  - H HYDRAULIC
  - I CURRENT
  - PD PULSE DURATION
  - O ELECTROMAGNETIC, SONIC
  - P PNEUMATIC
  - PD PULSE DURATION
  - R RESISTANCE (ELECTRIC)

CHEMICAL ABBREVIATIONS:
(STANDARD CHEMICAL FORMULAS ARE USED)

HAND SWITCH ABBREVIATIONS:

A	AUTOMATIC
C	COMPUTER OR CLOSE
H	HAND
L	LOCAL
M	MODULATE
O	OFF OR OPEN
R	REMOTE
S	START OR STOP

OTHER ABBREVIATIONS:

AI	ANALOG INPUT
AO	ANALOG OUTPUT
AS	AIR SUPPLY
COND	CONDUCTIVITY
CR	CHLORINE RESIDUAL
CTU	CENTRAL TELEMETRY UNIT
DCU	DISTRIBUTED CONTROL UNIT
DI	DIGITAL OR DISCRETE INPUT
DO	DISSOLVED OXYGEN OR DIGITAL OUTPUT
ES	ELECTRIC SUPPLY
FC	FAIL CLOSED
FLP	FAIL LAST POSITION
FO	FAIL OPEN
MC	MOTOR CONTROLLER
NIP	NETWORK INTERFACE PANEL
pH	HYDROGEN ION CONCENTRATION
PLC	PROGRAMMABLE LOGIC CONTROLLER
POLM	POLYMER
RIO	REMOTE I/O PANEL
TURB	TURBIDITY
VIB	VIBRATION
VSD	VARIABLE SPEED DRIVE

GENERAL NOTES

1. THIS IS A GENERAL LEGEND SHEET. SOME SYMBOLS & ABBREVIATIONS MAY NOT APPLY TO THIS SPECIFIC PROJECT.
2. THIS LEGEND APPLIES TO INSTRUMENTATION DIAGRAMS ONLY, & ITS SYMBOLS MAY NOT BE APPLICABLE TO NON–INSTRUMENTATION DRAWINGS.
3. THIS LEGEND SHEET & THE INSTRUMENTATION DIAGRAMS & I–DRAWINGS ARE GENERALLY BASED ON THE INSTRUMENT SOCIETY OF AMERICA'S STANDARDS FOR PRACTICES IN INSTRUMENTATION. SOME MODIFICATIONS, ADDITIONS, & ALTERATIONS MAY HAVE BEEN MADE TO ACCOMMODATE INDIVIDUAL PROJECT REQUIREMENTS.
4. SOME PROCESS ITEMS (SUCH AS EQUIPMENT ISOLATION VALVES, BYPASS LINES, ETC.) WHICH ARE NOT CRITICAL FOR AN UNDERSTANDING OF THE INSTRUMENTATION FUNCTIONS ARE NOT SHOWN ON THE INSTRUMENTATION SHEETS.
5. SEE ELECTRICAL SHEETS & SPECIFICATIONS FOR ADDITIONAL CONTROL & INTERLOCK REQUIREMENTS FOR EQUIPMENT NOT SHOWN OR NOT PROVIDED BY THE INSTRUMENTATION SUPPLIER.
6. SLANTED TEXT DENOTES EXISTING EQUIPMENT OR STRUCTURES. NON–SLANTED TEXT DENOTES NEW EQUIPMENT, STRUCTURES, & WORK. SLANTED TEXT (NOT SHADED) DENOTES FUTURE EQUIPMENT STRUCTURES & WORK.

VALVE ACTUATOR SYMBOLS

AUTOMATIC POSITIONER

VALVE OR GATE ACTUATOR WITH ✱ DEFINED AS FOLLOWS:

- P: AIR CYLINDER
- S: SOLENOID
- P/O: AIR/OIL CYLINDER
- E: ELECTRIC MOTOR
- H: HYDRAULIC CYLINDER
- EH: ELECTROHYDRAULIC
- Z: MISCELLANEOUS

FOR PRESSURE RELIEF OR SAFETY VALVES ONLY

MANUALLY (HAND) OPERATED

OR NO SYMBOL

TAG NUMBER & DESIGNATION EXAMPLE

- LOOP NO. 1234 — TYPICAL LOOP NUMBER
- CL2 — ADDITIONAL INSTRUMENT IDENTIFICATION. SEE FUNCTION SYMBOLS & ABBREVIATIONS.
- AE A — WHEN USED, LETTER DISTINGUISHES BETWEEN MULTIPLE, SIMILAR DEVICES IN THE SAME INSTRUMENT LOOP

INSTRUMENTATION IDENTIFICATION LETTERS

	FIRST LETTER		SUCCEEDING LETTERS		
	MEASURED OR INITIATING VARIABLE	MODIFIER	READOUT OR PASSIVE FUNCTION	OUTPUT FUNCTION	MODIFIER
A	ANALYSIS		ALARM		
B	BURNER, COMBUSTION		EMERGENCY	USER'S CHOICE	USER'S CHOICE
C	USER'S CHOICE		CLEANER	CONTROL	
D	DENSITY (MASS) OR SPECIFIC GRAVITY	DIFFERENTIAL			
E	VOLTAGE (EMF)		PRIMARY ELEMENT		
F	FLOW RATE	RATIO (FRACTION)			
G	GAUGING (DIMENSIONAL)		GLASS		
H	HAND (MANUALLY INITIATED)				HIGH OR OPEN
I	CURRENT (ELECTRICAL)		INDICATE		
J	POWER	SCAN			
K	TIME OR TIME SCHEDULE			CONTROL STATION	
L	LEVEL		LIGHT (PILOT)		LOW OR CLOSED
M	USER'S CHOICE	MOMENTARY			MIDDLE OR INTERMEDIATE
N	USER'S CHOICE		USER'S CHOICE	USER'S CHOICE	USER'S CHOICE
O	USER'S CHOICE		ORIFICE (RESTRICTION)		
P	PRESSURE OR VACUUM		POINT (TEST CONNECTION)		
Q	QUANTITY	INTEGRATE OR TOTALIZE			
R	RUN		RECORD		
S	SPEED OR FREQUENCY	SAFETY		SWITCH	
T	TEMPERATURE			TRANSMIT	
U	MULTIVARIABLE		MULTIFUNCTION	MULTIFUNCTION	MULTIFUNCTION
V	VISCOSITY, VIBRATION			VALVE, DAMPER, OR LOUVER	
W	WEIGHT OR TORQUE		WELL		
X	FAILURE	X AXIS			
Y	EVENT, STATE, OR PRESENCE	Y AXIS		RELAY, COMPUTE, CONVERT	
Z	POSITION, DIMENSION	Z AXIS		DRIVE, ACTUATE, OR UNCLASSIFIED CONTROL ELEMENT	

CONSTRUCTION DOCUMENTS

10620 GRIFFIN ROAD, SUITE 202
COOPER CITY, FLORIDA 33328
PHONE: (954) 448–7930
C.O.A. NO. 6783
Stephen E. Bailey, P.E.
Florida P.E. No. 42461

No.	REVISIONS	DATE	BY

Kimley»Horn

PROFESSIONAL ENGINEER
STEPHEN E. BAILEY
2122–E
U.S. VIRGIN ISLANDS

KHA PROJECT 045826000
DATE JUNE 2026
SCALE AS SHOWN
DESIGNED BY JPL
DRAWN BY FAD
CHECKED BY SEB

INSTRUMENTATION NOTES, SYMBOLS & ABBREVIATIONS

LBJ PUMP STATION
PREPARED FOR
VIWMA

SHEET NUMBER
I-01

This document, together with the concepts and designs presented herein, as an instrument of service, is intended only for the specific purpose and client for which it was prepared. Reuse of and improper reliance on this document without written authorization and adaptation by Kimley-Horn and Associates, Inc. shall be without liability to Kimley-Horn and Associates, Inc.

X:\Active Projects\Kimley Horn\Virgin Islands\06_100% Redesign\Dwgs\I-01 NOTES.dwg, 6/29/2026 4:01:29 PM, mthompson

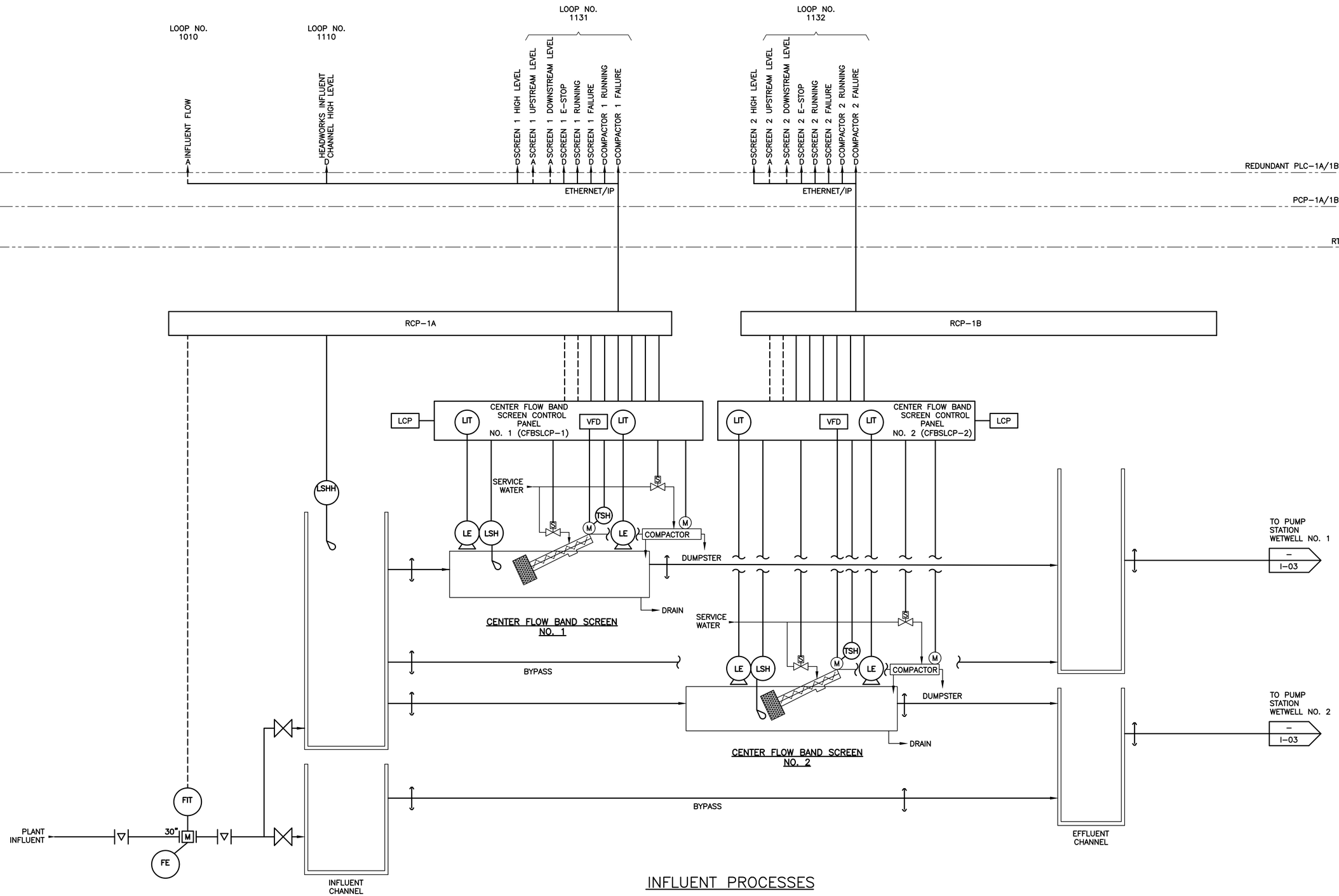

INFLUENT PROCESSES

CONSTRUCTION DOCUMENTS

10620 GRIFFIN ROAD, SUITE 202
COOPER CITY, FLORIDA 33328
PHONE: (954) 448-7930
C.O.A. NO. 6783
Stephen E. Bailey, P.E.
Florida P.E. No. 42461

No.	REVISIONS	DATE	BY

Kimley»Horn

PROFESSIONAL ENGINEER
STEPHEN E. BAILEY
2122-E
U.S. VIRGIN ISLANDS

KHA PROJECT 045826000	
DATE	JUNE 2026
SCALE	AS SHOWN
DESIGNED BY	JPL
DRAWN BY	FAD
CHECKED BY	SEB

P&ID - INFLUENT

LBJ PUMP STATION
PREPARED FOR
VIWMA

SHEET NUMBER
I-02

This document, together with the concepts and designs presented herein, as an instrument of service, is intended only for the specific purpose and client for which it was prepared. Reuse of and improper reliance on this document without written authorization and adaptation by Kimley-Horn and Associates, Inc. shall be without liability to Kimley-Horn and Associates, Inc.

X:\Active Projects\Kimley Horn\Virgin Islands\05_100% Redesign\Dwgs\I-02 P&ID INFLUENT.dwg 6/29/2026 4:01:31 PM mthompson

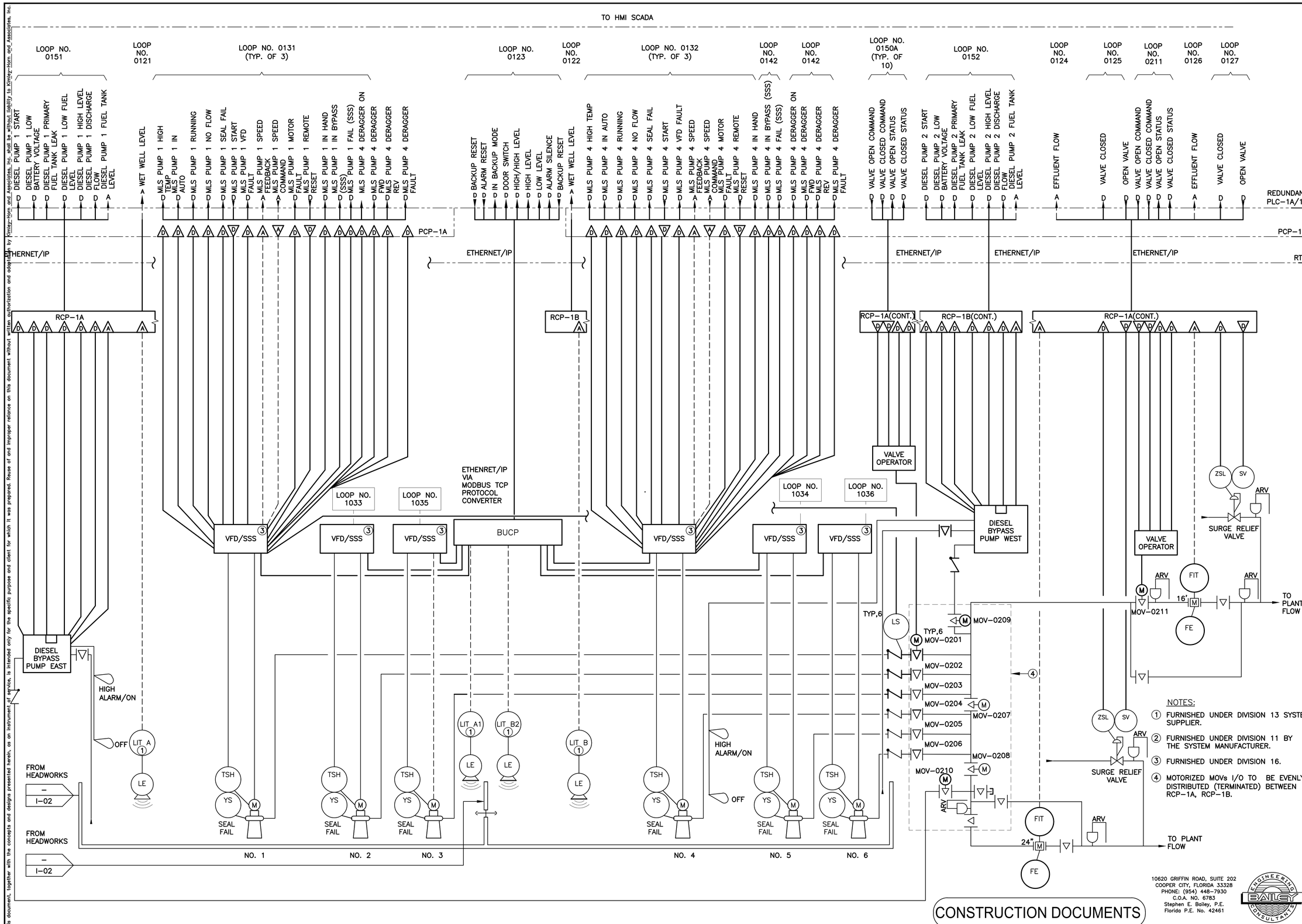

This document, together with the concepts and designs presented herein, as an instrument of service, is intended only for the specific purpose and client for which it was prepared. Reuse of and improper reliance on this document without written authorization and adaptation by Kimley-Horn and Associates, Inc. shall be without liability to Kimley-Horn and Associates, Inc.

X:\Active Projects\Kimley Horn\Virgin Islands\05_ 100% Redesign\Dwgs\I-03 P&ID INFLUENT.dwg, 6/29/2026 4:01:34 PM, mthompson

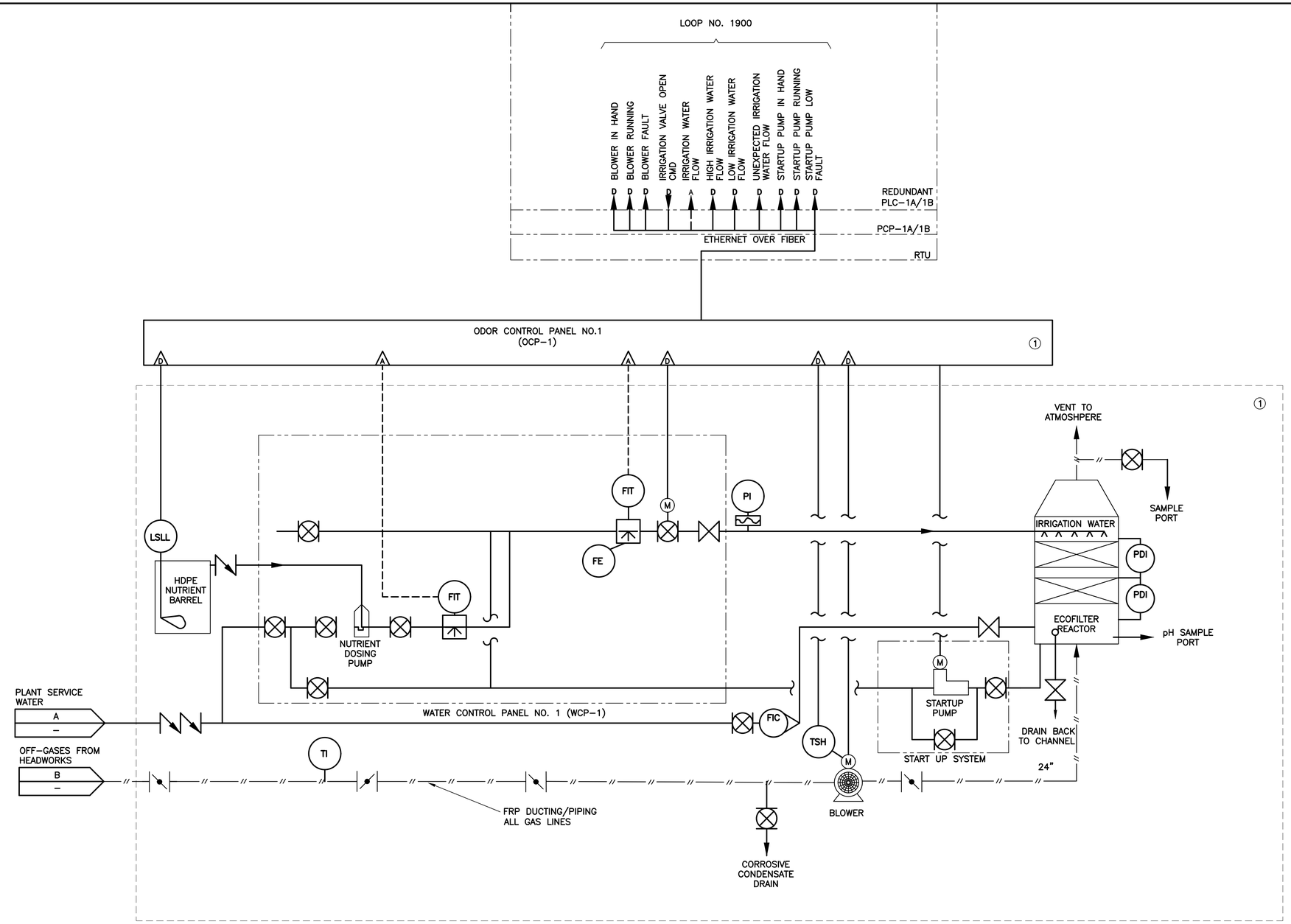

BIOLOGICAL ODOR CONTROL SYSTEM

NOTES:

1. FURNISHED UNDER DIVISION 11 BY THE SYSTEM MANUFACTURER.

CONSTRUCTION DOCUMENTS

10620 GRIFFIN ROAD, SUITE 202
COOPER CITY, FLORIDA 33328
PHONE: (954) 448-7930
C.O.A. NO. 6783
Stephen E. Bailey, P.E.
Florida P.E. No. 42461

No.	REVISIONS	DATE	BY

Kimley»Horn

PROFESSIONAL ENGINEER
STEPHEN E. BAILEY
2122-E
U.S. VIRGIN ISLANDS

KHA PROJECT 045826000	
DATE	JUNE 2026
SCALE	AS SHOWN
DESIGNED BY	JPL
DRAWN BY	FAD
CHECKED BY	SEB

P&ID - ODOR CONTROL

LBJ PUMP STATION
PREPARED FOR
VIWMA

SHEET NUMBER
I-04

This document, together with the concepts and designs presented herein, as an instrument of service, is intended only for the specific purpose and client for which it was prepared. Reuse of and improper reliance on this document without written authorization and adaptation by Kimley-Horn and Associates, Inc. shall be without liability to Kimley-Horn and Associates, Inc.

X:\Active Projects\Kimley Horn\Virgin Islands\06_ 100% Redesign\Dwgs\I-04 P&ID ODOR CONTROL.dwg, 6/29/2026 4:01:36 PM, mthompson

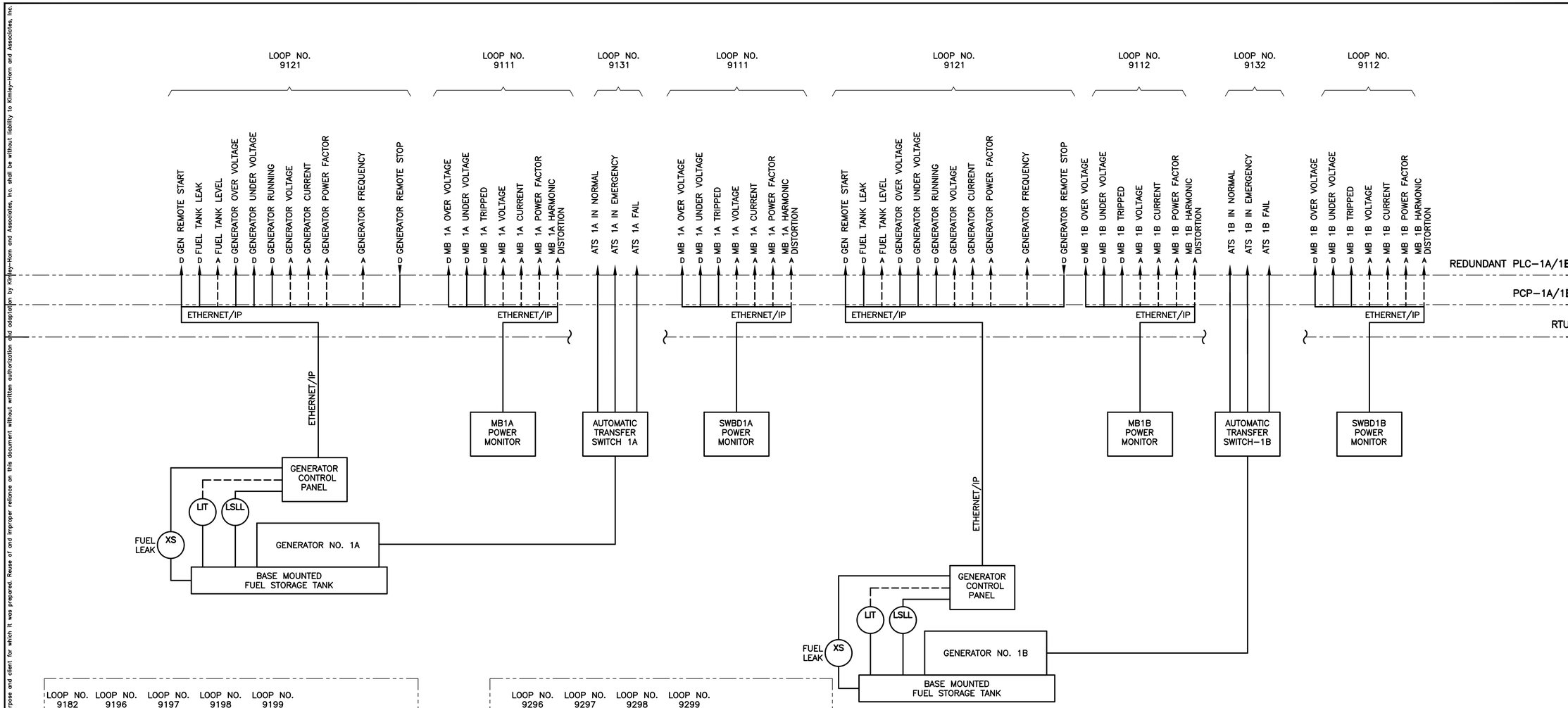

ARC FLASH MONITORING

(1) TYPICAL SIGNALS FOR MAINBREAKER–1B (MB1B), SWITCHBOARD–1B (SWBD1B).

CONSTRUCTION DOCUMENTS

10620 GRIFFIN ROAD, SUITE 202
COOPER CITY, FLORIDA 33328
PHONE: (954) 448–7930
C.O.A. NO. 6783
Stephen E. Bailey, P.E.
Florida P.E. No. 42461

No.	REVISIONS	DATE	BY

Kimley»Horn

PROFESSIONAL ENGINEER
STEPHEN E. BAILEY
2122–E
VIRGIN ISLANDS

KHA PROJECT 045826000	
DATE	JUNE 2026
SCALE	AS SHOWN
DESIGNED BY	JPL
DRAWN BY	FAD
CHECKED BY	SEB

POWER MONITORING

LBJ PUMP STATION
PREPARED FOR
VIWMA

SHEET NUMBER
I-05

This document, together with the concepts and designs presented herein, as an instrument of service, is intended only for the specific purpose and client for which it was prepared. Reuse of and improper reliance on this document without written authorization and adaptation by Kimley-Horn and Associates, Inc. shall be without liability to Kimley-Horn and Associates, Inc.

X:\Active Projects\Kimley Horn\Virgin Islands\06_100% Redesign\Dwgs\I-05 PWR MONITORING.dwg, 6/29/2026 4:01:39 PM, mthompson

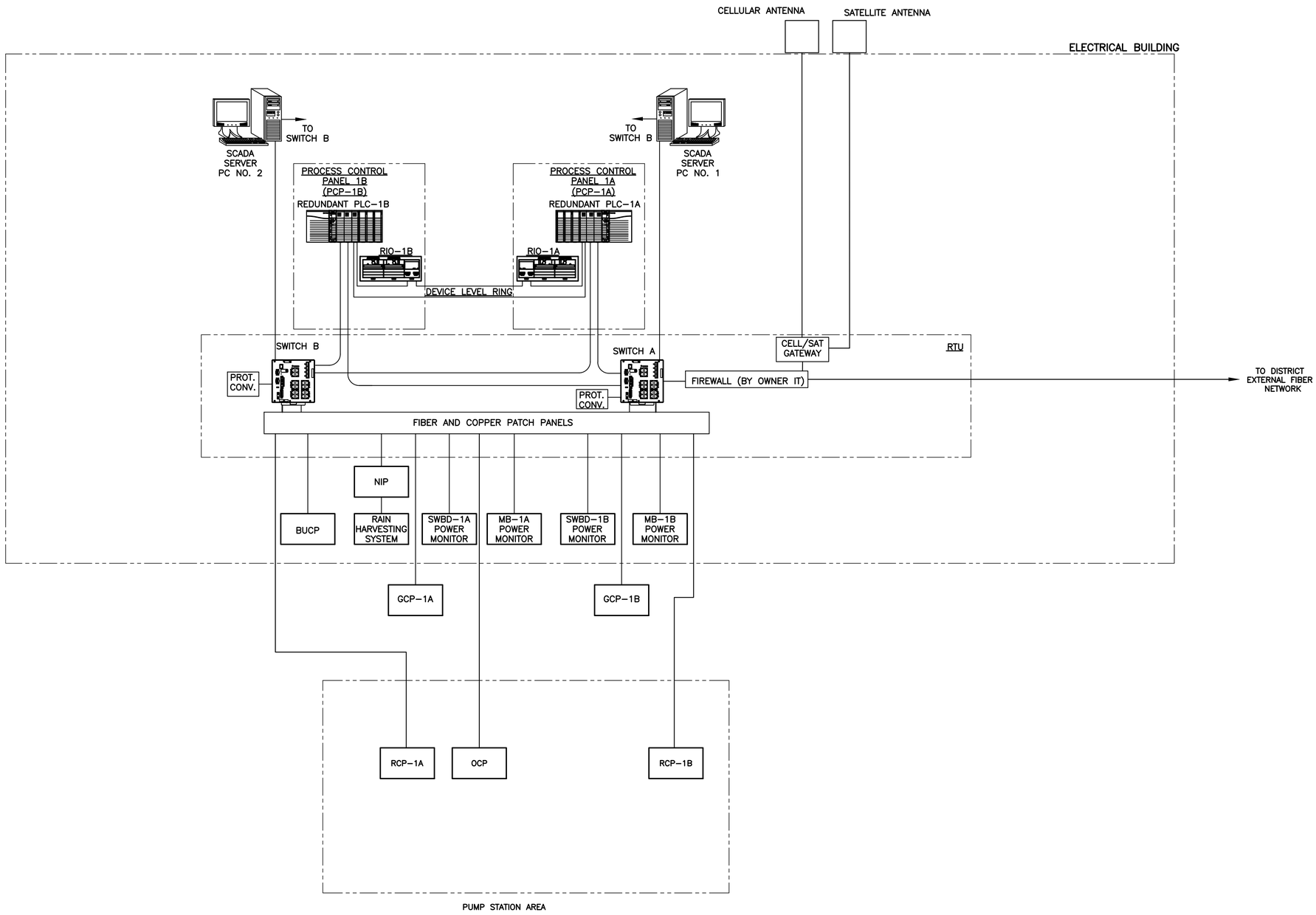

CONTROL SYSTEM DIAGRAM

SCALE: N.T.S.

CONSTRUCTION DOCUMENTS

10620 GRIFFIN ROAD, SUITE 202
COOPER CITY, FLORIDA 33328
PHONE: (954) 448-7930
C.O.A. NO. 6783
Stephen E. Bailey, P.E.
Florida P.E. No. 42461

No.	REVISIONS	DATE	BY

Kimley»Horn

PROFESSIONAL ENGINEER
STEPHEN E. BAILEY
2122-E
VIRGIN ISLANDS

KHA PROJECT 045826000
DATE JUNE 2026
SCALE AS SHOWN
DESIGNED BY JPL
DRAWN BY FAD
CHECKED BY SEB

CONTROL SYSTEM DIAGRAM

LBJ PUMP STATION
PREPARED FOR
VIWMA

SHEET NUMBER
I-06

This document, together with the concepts and designs presented herein, as an instrument of service, is intended only for the specific purpose and client for which it was prepared. Reuse of and improper reliance on this document without written authorization and adaptation by Kimley-Horn and Associates, Inc. shall be without liability to Kimley-Horn and Associates, Inc.

X:\Active Projects\Kimley Horn\Virgin Islands\06_100% Redesign\Dwgs\I-06 CONTROL SYSTEM.dwg, 6/29/2026 4:07:41 PM, mthompson

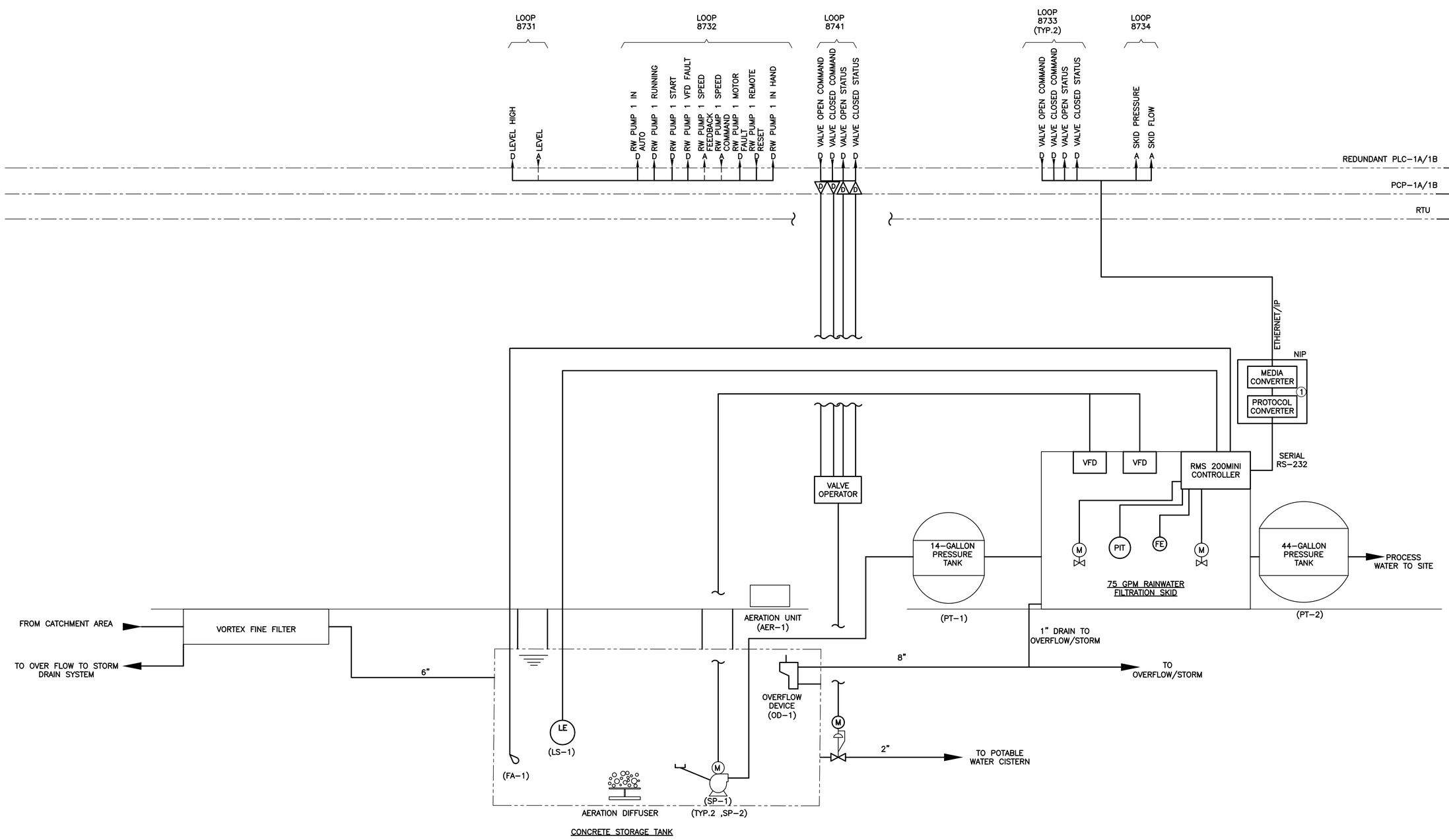

NOTES:

1. FURNISHED UNDER DIVISION 13 SYSTEM SUPPLIER.

RAINWATER COLLECTION AND TREATMENT SYSTEM

CONSTRUCTION DOCUMENTS

10620 GRIFFIN ROAD, SUITE 202
COOPER CITY, FLORIDA 33328
PHONE: (954) 448-7930
C.O.A. NO. 6783
Stephen E. Bailey, P.E.
Florida P.E. No. 42461

No.	REVISIONS	DATE	BY

Kimley»Horn

PROFESSIONAL ENGINEER
STEPHEN E. BAILEY
2122-E
U.S. VIRGIN ISLANDS

KHA PROJECT	045826000
DATE	JUNE 2026
SCALE	AS SHOWN
DESIGNED BY	JPL
DRAWN BY	FAD
CHECKED BY	SEB

RAINWATER COLLECTION AND TREATMENT SYSTEM

LBJ PUMP STATION
PREPARED FOR
VIWMA

SHEET NUMBER
I-07

This document, together with the concepts and designs presented herein, as an instrument of service, is intended only for the specific purpose and client for which it was prepared. Reuse of and improper reliance on this document without written authorization and adaptation by Kimley-Horn and Associates, Inc. shall be without liability to Kimley-Horn and Associates, Inc.

X:\Active Projects\Kimley Horn\Virgin Islands\06_100% Redesign\Dwgs\I-07 RAINWATER COLLECTION AND TREAMENT SYSTEM.dwg, 6/29/2026 4:01:26 PM, mthompson